TopVent® gas
Design handbook

Hoval

Recirculation and supply air handling units for heating high spaces

Content

Safety

3

A

TopVent® DGV

Gas-fired recirculation unit for heating high spaces

7

B

TopVent® NGV

Gas-fired air recirculation unit for heating high spaces
with lower comfort requirements (e.g. high rack storage areas)

23

C

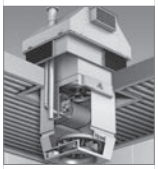

TopVent® commercial GA

Gas-fired roof-mounted unit for ventilating and heating high spaces

39

D

TopVent® MG

Gas-fired supply air handling unit for ventilating and heating high spaces

55

E

TopVent® GV

Gas-fired air recirculation unit for heating low-ceiling spaces

73

F

Options

89

G

Control systems

97

H

System design

101

I

Operation

105

J

Hoval

A

Safety

1 Symbols 5

2 Operational safety 5

3 Information for a User Manual 5

Hoval

A

1 Symbols

Caution
This symbol warns against risk of injury. Please heed all instructions designated by this symbol to prevent injuries and/or death.

Attention
This symbol warns against property damage. Please heed the respective instructions to prevent risk of damage to the unit and its functions.

Notice
This symbol designates information about economic use of the units or special tips.

2 Operational safety

TopVent® gas units are state-of-the-art and safe to operate. Nevertheless, hazards may emanate from the units if they are used incorrectly or not used as intended. Therefore:

- Please read the operating instructions before unpacking, installing, commissioning and before maintaining the equipment.
- Store the operating instructions so that they are easily accessible.
- Observe all appropriate informational and warning signs.
- Unauthorised reconfiguration or modification of the unit is not permitted.
- Follow the local safety and accident prevention regulations at all times.
- TopVent® gas units may only be installed, operated and maintained by authorized, trained and instructed skilled personnel.
  Specialists as defined by these operating instructions are those persons who, based on their training, knowledge and experience as well as their knowledge of the relevant regulations and guidelines, can carry out the work assigned to them and recognise potential hazards.

3 Information for a User Manual

According to the accident prevention regulations of some countries, the operator of equipment must meet certain requirements for the prevention of occupational accidents and instruct the operating personnel as to the hazards that may occur and how to prevent them. This can be done with the help of the user manual.
In addition to national regulations for accident prevention and environmental protection, a user manual should also include the most important items of the operating instructions.

Hoval

TopVent® DGV

Gas-fired recirculation unit for heating high spaces

B

1 Use 8

2 Construction and operation 8

3 Technical data 11

4 Design example 17

5 Options 18

6 Control systems 18

7 Transport and installation 19

8 Specification texts 22

1 Use

1.1 Intended use

TopVent® DGV units are heaters intended for heating high spaces operating with air recirculation.
Also included under intended use are compliance with the installation, commissioning, operating and maintenance provisions (operating instructions).
Any use beyond this is considered improper. The manufacturer shall not be held responsible for any damage resulting from such use.

1.2 User group

TopVent® DGV units may only be installed, operated and maintained by authorised and instructed personnel who are well acquainted with the units and are informed about possible dangers.
The operating instructions are for English-speaking operating engineers and technicians as well as specialists in building, heating and air technology. The operating instructions are for English-speaking operating engineers and technicians as well as specialists in building, heating and air technology.

1.3 Hazards

TopVent® DGV units are state-of-the-art and safe to operate. However, despite all precautionary measures taken, there are still some potential hazards which are not immediately obvious, such as:

- Dangers when working with the electrical system
- Dangers when working with components of the gas circuit
- When working on the unit, objects (e.g. tools) could be dropped.
- Malfunctions as a result of defective parts
- Danger caused by coming in contact with hot components when carrying out work inside the unit or on the flue gas system

2 Construction and operation

TopVent® DGV was especially developed for use in high spaces. It fulfills the following functions:

- Heating (with gas-fired heat exchanger)
- Recirculation
- Air distribution via Air-Injector
- Air filtration (optional)

The unit is mounted under the ceiling and draws in interior air. The air is heated in a gas-fired heat exchanger and injected back into the room through the Air-Injector.
Thanks to its high performance and efficient air distribution the TopVent® DGV covers a large area. Therefore, compared to other systems, fewer units are needed to achieve the required conditions.
2 different unit sizes and diverse output levels, as well as a broad range of accessories make possible solutions tailored to the requirements of each individual hall.

2.1 Unit construction

TopVent® DGV consists of the heater unit and the air injector. Both components are bolted together, but can be dismantled separately again.

2.2 Air distribution with the Air-Injector

The patented air distributor – called the Air-Injector – is the core element. The air discharge angle is set by means of the adjustable guide vanes. It depends on the air flow rate, the mounting height and the temperature difference between the supply air and room air. The air is therefore blown into the room vertically downward, conically or horizontally. This ensures that:

- with each unit a large area of the hall can be covered,
- the occupied area is draught-free,
- the temperature stratification in the room is reduced, thus saving energy.

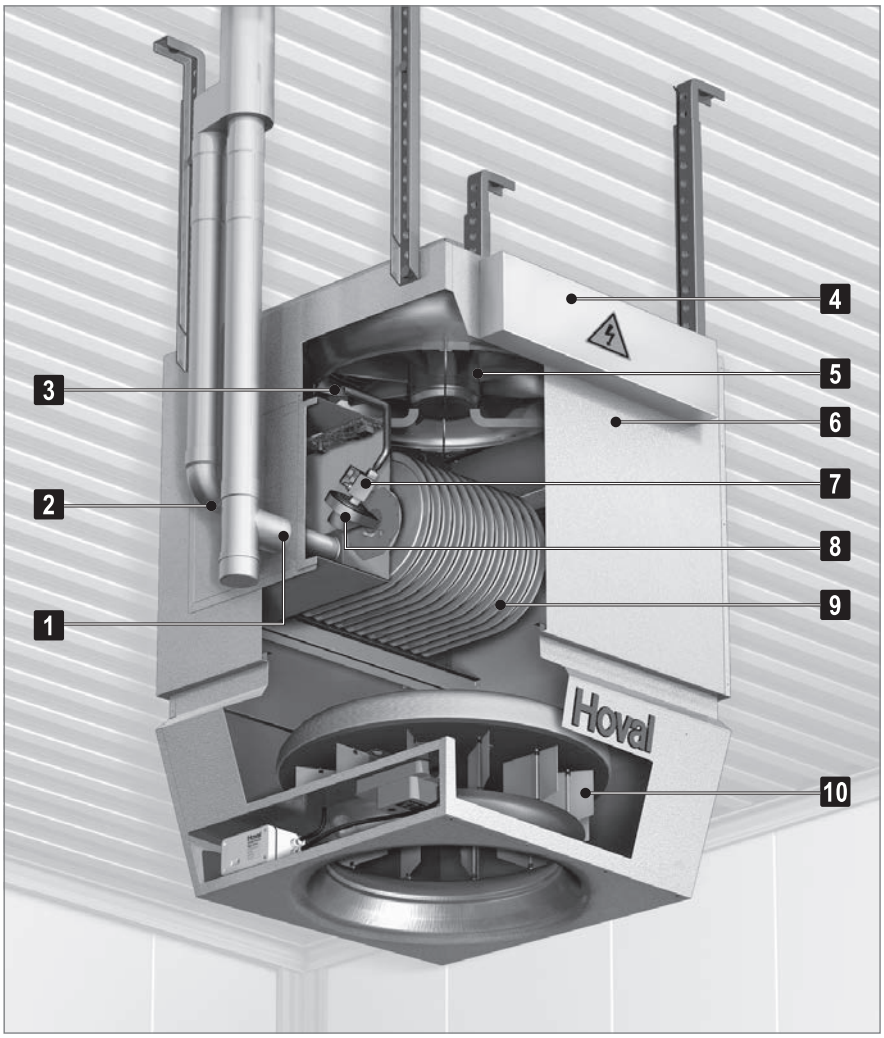

1	**Flue gas connection**
2	**Combustion air connection**
3	**Gas connection**
4	**Terminal box with isolation switch**
5	**Fan:** maintenance-free and low-noise
6	**Housing:** of corrosion-resistant Aluzinc sheet metal
7	**Gas control valve**
8	**Burner unit:** consisting of stainless steel gas blower and premix burner
9	**Heat exchanger:** of stainless steel
10	Air-Injector: patented, automatically adjustable vortex air distributor for draught-free air distribution over a large area

Fig. B1: TopVent® DGV structure

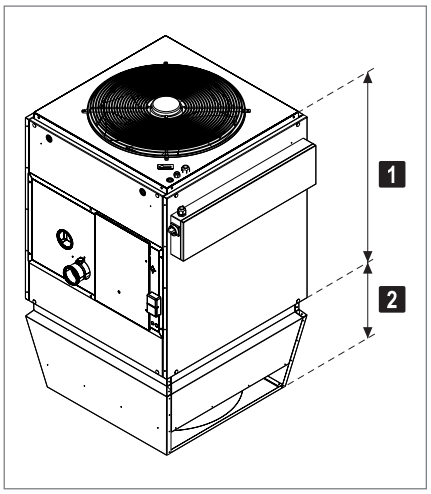

1	Heating section
2	Air-Injector

Fig. B2: TopVent® DGV components

2.3 Operating modes

TopVent® DGV operates in the following modes:
- Off
- Recirculation
- Recirculation night
- Recirculation speed 1

TempTronic regulates these modes of operation automatically.

Code	Operating mode	Use	Layout	
OFF	**Off** The fan is switched off. Frost protection for the room remains active. There is no room temperature control.	if the unit is not needed	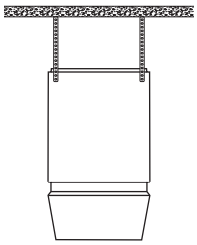	Fan ..... off Heater..... off
REC	**Recirculation** On/off-operation: if heating is required, the unit draws in room air, heats it and returns the warm air back into the room. The room temperature set value day is active.	during room use	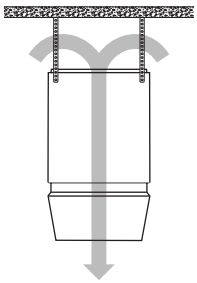	Fan ..... Speed 1 / 2 [1] Heater..... 60…100 % [1] for heat demand
RECN	**Recirculation night** like REC, but with room temperature set value night	during the night and on weekends		
REC1	**Recirculation speed 1** the same as REC, but the unit operates only at fan speed 1 (low air flow rate)	during room use	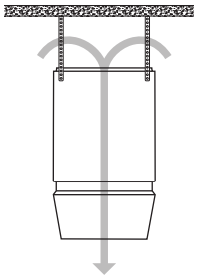	Fan ..... Speed 1 [1] Heater..... 60…100 % [1] for heat demand

Table B1: TopVent® DGV operating modes

Notice
There is only one fan speed for TopVent® units size 6/60. Hence these units operate only at fan speed 2 in the operating modes REC and RECN. The operating mode REC1 is not available.

3 Technical data

3.1 Unit type reference

DGV - 6 / 30 / ...

Unit type
TopVent® DGV

Unit size
6 or 9

Output in kW
30 or 60

Options

Table B2: Unit type reference

3.2 Application limits

Ambient temperature	min.	°C	-15
	max.	°C	35
Supply air temperature	max.	°C	60

The units cannot be used in:
- areas where there is danger of explosion
- places with a corrosive or aggressive environment
- damp locations
- spaces with a large amount of dust

Table B3: TopVent® DGV limits of operation

3.3 Air flow rate, gas consumption

Unit type			DGV-6/30		DGV-6/60	DGV-9/60	
Fan speed			**1**	**2**	**2**	**1**	**2**
Fan speed		min^{-1}	720	900	900	670	900
Nominal air flow rate [1]		m³/h	4065	5690	5825	6405	8255
Floor area reached [2]		m²	342	506	506	576	841
Nominal heat input	max.	kW		32.0	66.0		66.0
Nominal heat output	max.	kW		29.2	60.5		60.5
Combustion efficiency [3]		%		min. 91	min. 91		min. 91
Gas consumption							
I_{2ELL}, I_{2ELw}, I_{2H}, I_{2E}, I_{2Esi}, $I_{2E(S)B}$, I_{2Er} (G20) H_i = 9.45 kWh/m³ with 20 / 25 mbar gas supply pressure		m³/h		3.4	7.0		7.0
I_{2ELL} (G25) H_i = 8.125 kWh/m³ with 20 mbar gas supply pressure		m³/h		3.9	8.1		8.1
I_{2L}, I_{2Esi}, $I_{2E(R)B}$, I_{2Er} (G25) H_i = 8.38 kWh/m³ with 25 mbar gas supply pressure		m³/h		3.8	7.9		7.9

1) at an air temperature of 20 °C
2) Mounting height H_{max} = 11 m for a temperature difference between supply air and room air of up to 30 K
3) in accordance with EN 1020

Table B4: TopVent® DGV technical data

3.4 Electrical connections

Unit type		DGV-6/30	DGV-6/60	DGV-9/60
Supply voltage	V AC	400 3N	400 3N	400 3N
Permitted voltage tolerance	%	+10 / -15	+10 / -15	+10 / -15
Frequency	Hz	50	50	50
Power consumption	W	660	660	910
Current consumption	A	1.69	1.69	2.19
Protection rating	–	IP 20	IP 20	IP 20

Table B5: TopVent® DGV electrical connections

3.5 Gas connection

Unit type	DGV-6/30	DGV-6/60	DGV-9/60
Gas category: natural gas	I_{2ELL}, I_{2ELw}, I_{2L}, I_{2H}, I_{2E}, I_{2Esi}, $I_{2E(S)B}$, $I_{2E(R)B}$, I_{2Er}		
Gas appliance type [1)]	B_{23}, C_{13}, C_{33}		
Gas connection	Rp ½"	R ¾"	R ¾"
Combustion air connection	DN 80	DN 100	DN 100
Flue gas connection	DN 80	DN 100	DN 100
Max. length of flue gas duct [2)]	4 m	6 m	6 m
Max. length of flue gas duct if insulated [2)]	8 m	10 m	10 m

[1)] according to method of flue gas evacuation and combustion air supply
[2)] Equivalent length of formed parts:
– 90° elbow.....2 m
– 45° elbow .....1 m
– 90° T-piece ....2 m

Table B6: TopVent® DGV gas circuit connections

3.6 Sound levels

Unit type			DGV-6/30		DGV-6/60	DGV-9/60	
Fan speed			1	2	2	1	2
Sound pressure level (at a distance of 5 m) [1]		dB(A)	47	54	54	50	56
Total sound power level		dB(A)	69	76	76	72	78
Octave sound power level	63 Hz	dB	72	80	80	78	83
	125 Hz	dB	69	76	76	74	82
	250 Hz	dB	72	78	77	74	80
	500 Hz	dB	66	74	73	71	75
	1000 Hz	dB	63	71	71	67	73
	2000 Hz	dB	59	68	67	62	69
	4000 Hz	dB	52	62	61	56	63
	8000 Hz	dB	48	56	56	51	58

[1] with a hemispherical radiation pattern in a low-reflection room

Table B7: TopVent® DGV sound power levels

3.7 Heat output

Air entry temp. [1]		10 °C			15 °C			20 °C		
		Q	t_S	H_{max}	Q	t_S	H_{max}	Q	t_S	H_{max}
Unit type	Fan speed	kW	°C	m	kW	°C	m	kW	°C	m
DGV-6/30	1	29.2	31.5	8.7	29.2	36.5	8.7	29.2	41.5	8.8
	2	29.2	25.4	13.7	29.2	30.4	13.8	29.2	35.4	13.9
DGV-6/60	2	60.5	41.2	10.2	60.5	46.2	10.2	60.5	51.2	10.3
DGV-9/60	1	60.5	38.3	8.4	60.5	43.3	8.5	60.5	48.3	8.6
	2	60.5	32.0	11.9	60.5	37.0	12.0	60.5	42.0	12.1

Legend:
Q = Nominal heat output
t_S = Maximum supply air temperature
H_{max} = Maximum mounting height

[1] The supply air temperature is equivalent to the room temperature.

Table B8: TopVent® DGV heat output, supply air temperatures and mounting height

3.8 Minimum and maximum distances

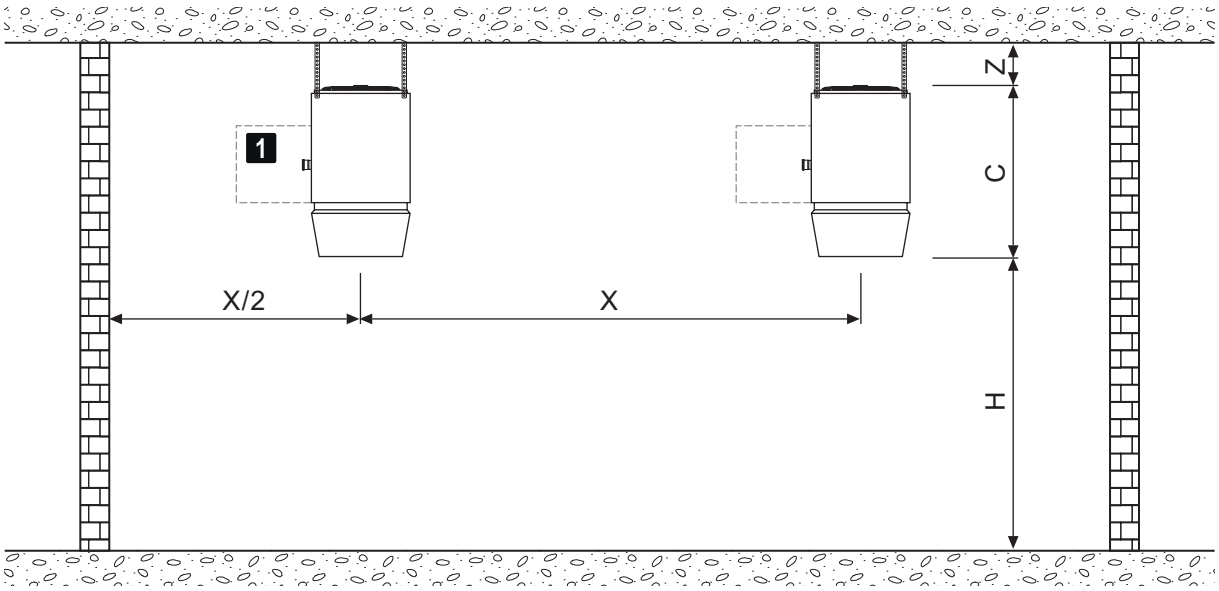

Unit type			DGV-6		DGV-9	
Fan speed			**1**	**2**	**1**	**2**
Height of unit C		mm	1562	1562	1640	1640
Unit clearance X	min.	m	10.0	11.5	12.0	14.0
	max.	m	18.5	22.5	24.0	29.0
Mounting height H	min.	m	4.0	4.0	5.0	5.0
Distance from ceiling Z	min.	m	0.3	0.3	0.4	0.4

1 Allow a free space of 1.5 m for service and maintenance.

Table B9: Minimum and maximum distances

3.9 Dimensions and weight

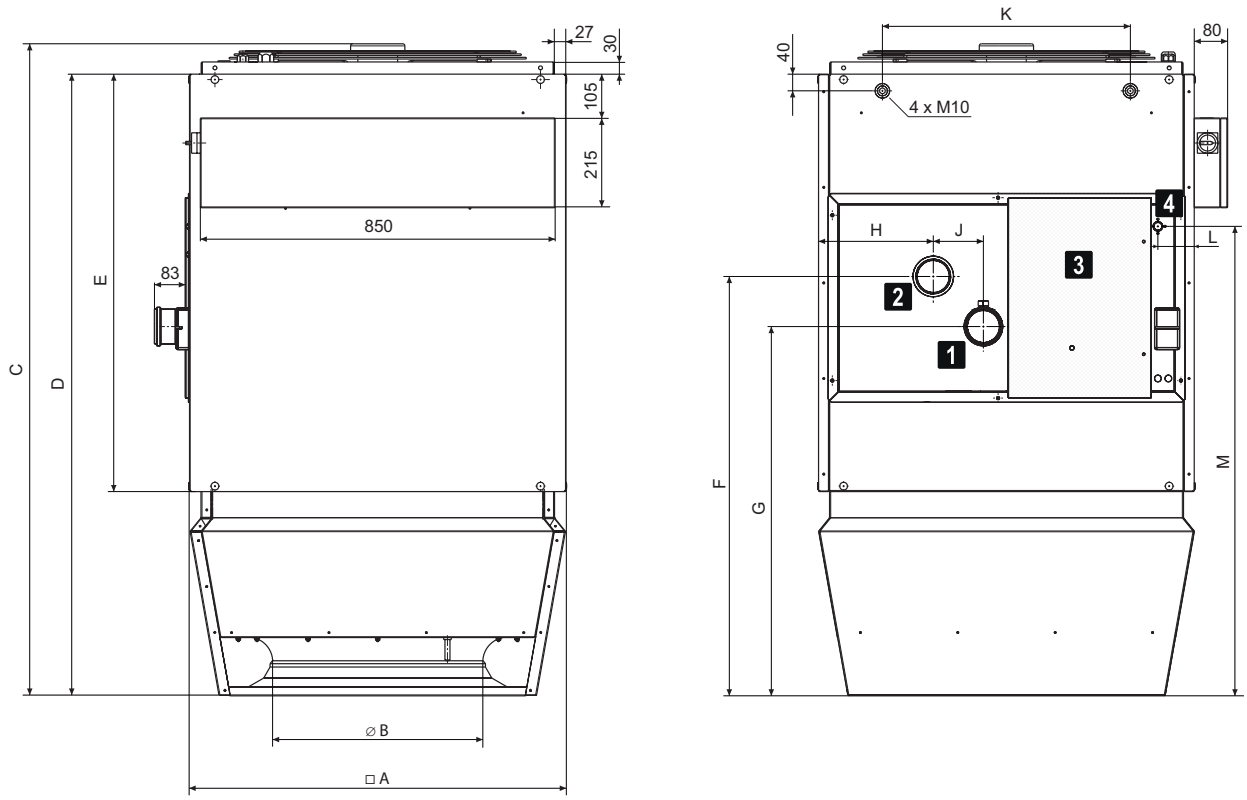

Unit type		DGV-6/30	DGV-6/60	DGV-9/60
A	mm	900	900	1100
B	mm	500	500	630
C	mm	1562	1562	1640
D	mm	1490	1490	1570
E	mm	1000	1000	1000
F	mm	946	974	1048
G	mm	836	834	908
H	mm	258	237	338
J	mm	110	140	140
K	mm	594	594	846
L	mm	87	73	172
M	mm	1057	1128	1203
Weight	kg	125	135	170

1	Flue gas connection with measuring opening
2	Combustion air connection
3	Inspection door with measuring opening for combustion air temperature
4	Gas connection

Table B10: TopVent® DGV dimensions and weights

3.10 Air flow rate with additional pressure drops

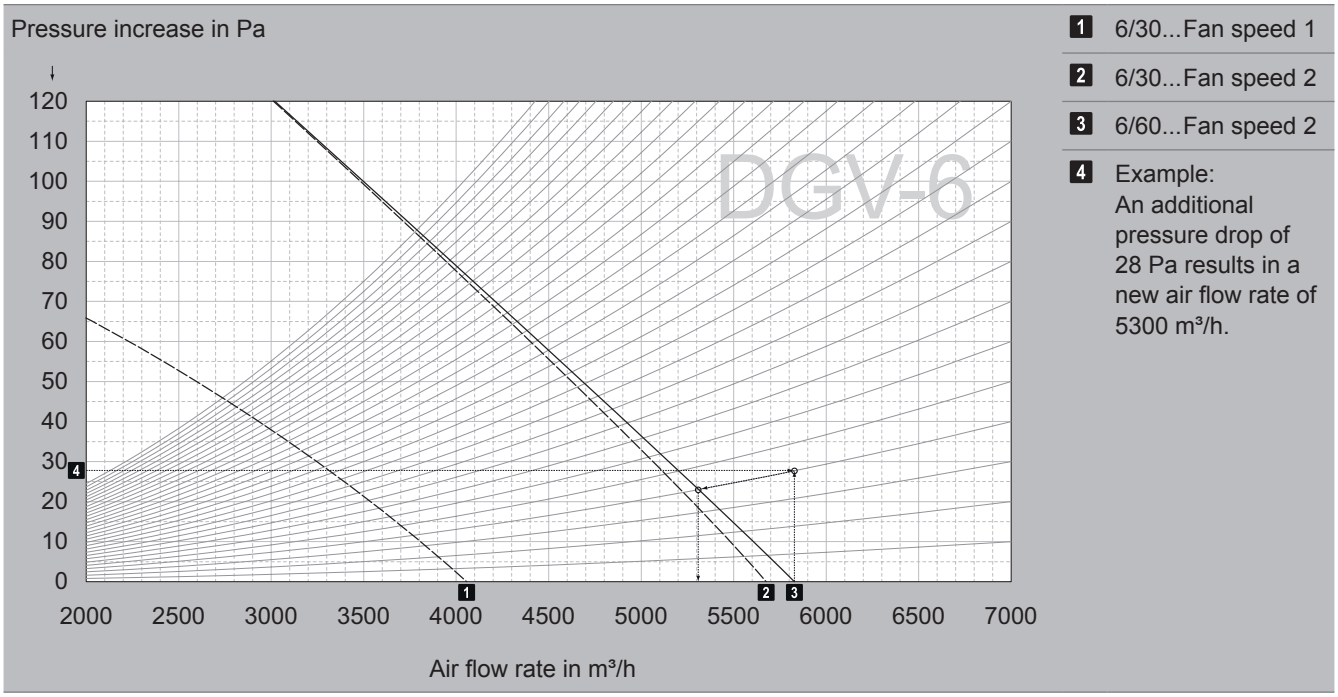

Diagram B1: TopVent® DGV-6 air flow rate for additional pressure drop

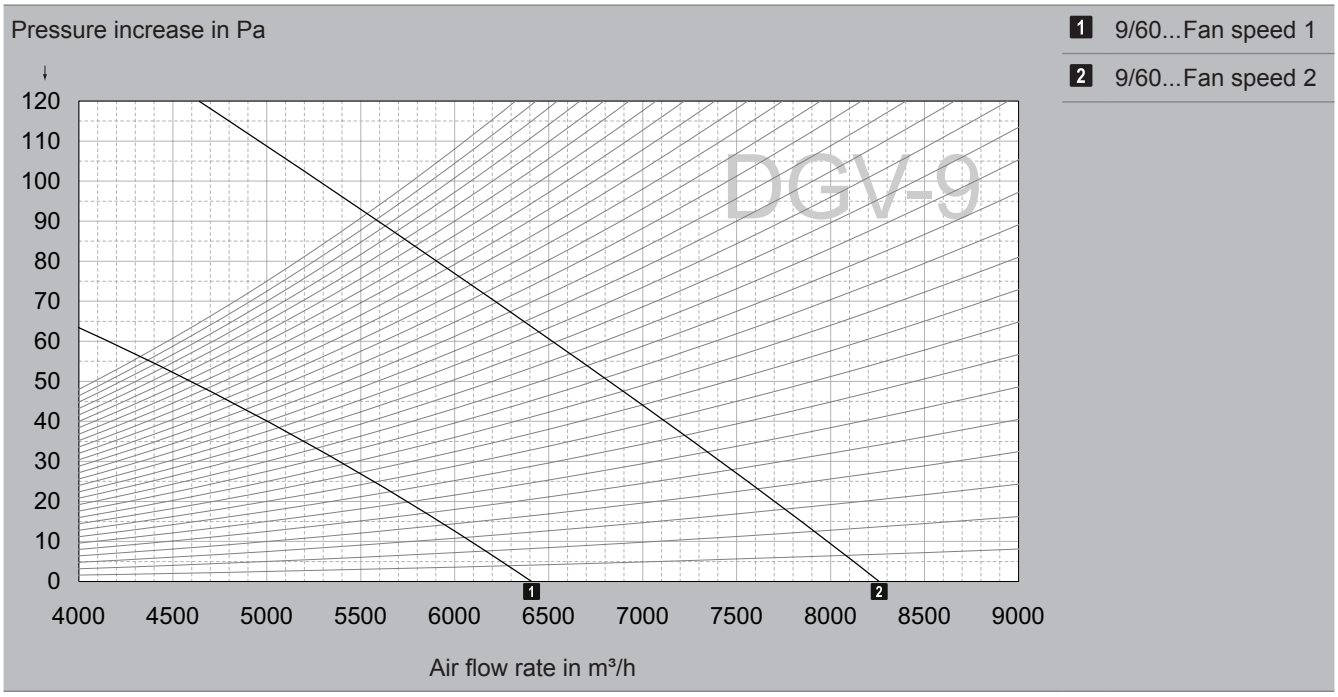

Diagram B2: TopVent® DGV-9 air flow rate for additional pressure drop

4 Design example

Input data ■ Geometry of the room (plan) ■ Mounting height (= distance between floor and lower edge of the TopVent® unit) ■ Heating load ■ Desired room temperature ■ Comfort requirements (acoustic)	**Example** Dimensions.....50 x 70 m Mounting height.....10 m Heating load .....350 kW Room temperature.....20 °C Comfort requirements.Standard
Comfort requirements Define the fan speed in accordance with the acoustic requirements: ■ Low noise level → fan speed 1 ■ Normal noise level → fan speed 2	Standard → fan speed 2
Mounting height ■ With the minimum mounting height (Table B9) check which units can be used. ■ With the maximum mounting height (Table B8) check which units can be used. ■ Strike units which are not adequate.	DGV-6/30 ✓ DGV-6/60 ✓ DGV-9/60 ✓
Minimum number a) Minimum number based on surface In Table B4 the maximum floor area which can be covered by TopVent® DGV can be seen. For a known floor area it is then possible to calculate - for each unit size - the minimum number of units required. b) Minimum number based on length x width Depending on the shape of the hall and in relation to its length and width, a certain number of units will be required. This can be calculated from the maximum distances between the units and between them and the wall (Table B9). c) Minimum number based on heat load Depending on the total heat output required, a minimum number of units can be calculated for each unit size (see Table B8). The highest number from results a), b) and c) is the actual minimum number required.	Calculate the minimum number of units according to a), b) and c) and enter it in a table for each type of unit. Take the highest value as the minimum quantity.

Type	a)	b)	c)		
DGV-6/30	7	12	12		12
DGV-6/60	7	12	6	➡	12
DGV-9/60	5	6	6		6

Definitive number of units Choose the final solution from the remaining possibilities, depending on the geometry of the hall and the costs.	6 units DGV-9/60

5 Options

TopVent® DGV can be adapted to the requirements of a specific project thanks to a range of optional equipment. You will find a detailed description of all optional components in Part G 'Options' of this handbook.

Option	Use
Flue gas accessories	for simple installation independently of room air
Paint finish	in the Hoval standard colour red or in any colour required
Suspension set	for mounting the unit on ceiling
Filter box	to filter recirculation air
Acoustic cowl	to reduce noise levels in the room (reduced noise radiation from Air-injector)
Recirculation silencer	to reduce noise levels in the room (reduced noise reflection from the ceiling)
Air outlet box	for the use of TopVent® DGV in low-ceiling halls

Table B11: Availability of options for TopVent® DGV

6 Control systems

TopVent® DGV units are controlled by TempTronic RC. This programmable control unit, developed especially for TopVent® units, offers the following advantages:

- Regulation of the room temperature
- Control of air distribution by means of the Hoval Air-Injector
- 3 set point values can be set (Room temperature day, Room temperature night and Frost protection temperature)
- Control of operating modes according to week programme and calendar
- Registration of unit malfunctions in an alarm list
- Password protection for user and service personnel
- Menu-guided operation via a 4-line display
- Integrated room temperature sensor

You will find a detailed description of TempTronic in Part H 'Control systems' of this handbook.

Notice
In indoor climate systems in which TopVent® DGV units are used together with RoofVent® fresh air handling units, Hoval DigiNet takes over all control and regulation functions.

7 Transport and installation

7.1 Installation

Caution
Risk of injury from incorrect handling. Have transport and assembly work carried out by trained specialists!

For the purposes of installation the units are provided with four M10 rivet nuts with hexagon bolts and washers. The following guidelines are important when preparing for assembly:

- Attach the TopVent® unit using a suspension set (option) or by means of steel flat, slotted steel flat, angles, steel cables, etc.
- Secure the unit only to ceilings of fireproof materials and with sufficient load-bearing capacity.
- Do not use eyebolts.
- Do not install any additional loads.
- The TopVent® unit must be installed horizontally.
- Non-vertical suspensions are permissible up to a maximum angle of 45°.

7.2 Installation of the flue gas evacuation and the combustion air supply

Caution
Risk of injury from incorrect handling. Installation of the flue gas evacuation and the combustion air supply may only be carried out by specialists!

Observe national / local regulations when planning the flue gas evacuation and the combustion air supply. From an early stage, coordinate the installation with the responsible district chimney sweep authorities and obtain the necessary authorisation from the local building authority.
Please note the following:

- The units can be installed as room-air-dependent (Type B_{23}) or room-air-independent (Type C_{13}, C_{33}) appliances.
- If the unit is room-air-independent, equip it with the optional flue gas kit.
- For room-air-dependent operation the combustion air is taken directly from the room in which the unit is installed. Ensure the room is sufficiently ventilated and that the combustion air is free from pollutants and aggressive substances (halogens such as chlorides, fluorides, etc.).
- Observe the maximum lengths given in Table B6 (see chapter 3 'Technical data').

7.3 Gas connection

Caution
Risk of injury from incorrect handling. The gas connection may only be carried out by specialists authorised by the gas supply company!

Please note the following:

- The fuel used is natural gas. Check the type of gas the unit is set to work with and, if necessary, have Hoval Customer Service reset the unit to the type of gas supplied locally.
- During operation of the unit, the required quantity of gas and the necessary pressure of gas must be present constantly.
- Connect the gas supply line with appropriate bolted joints which can be loosened, tension-free and vibration-free.
- The connection of the unit to the gas supply line must be gas-tight.
- Ensure that a gas pressure regulator and a cut-off-valve (not part of the scope of supply) are installed directly before the unit.

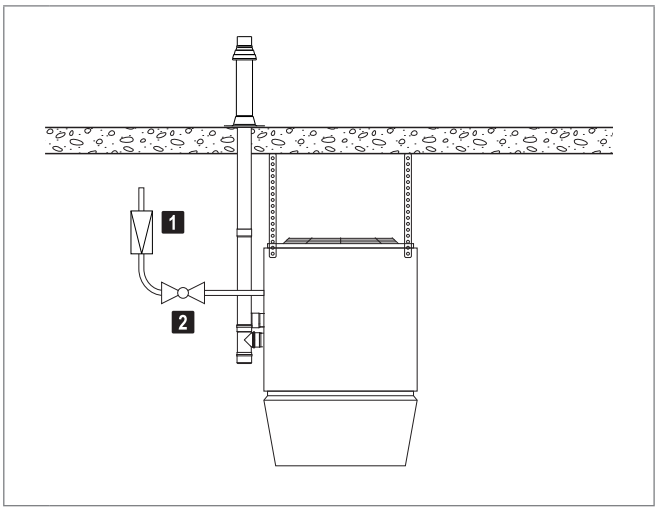

1 Gas pressure regulator (20…50 mbar)
Recommended settings:
– Natural gas .. 20 mbar
– Liquid gas .... 30 mbar

2 Cut-off-valve

Fig. B3: Gas pressure regulator and cut-off-valve in the gas supply line

B

7.4 Electrical installation

Caution
Danger from electric current. The electrical installation is to be carried out only by a qualified electrician!

- Observe all relevant regulations (e.g. EN 60204-1).
- Check whether the local operating voltage, frequency and fuse protection match the data on the type plate. If there are any discrepancies, the unit must not be connected!
- Cable cross-sections must be selected according to technical regulations, e. g. VDE 0100.
- Electrical installation to be carried out according to wiring diagram.
- Do not forget the master switch for the complete installation.

A TempTronic can control up to 8 TopVent® units simultaneously:
- Connect TempTronic and the units to each other via a system bus.
- Assign a number to each unit:
  – micro switch S1 on the power module
  – micro switch S2 on the burner control

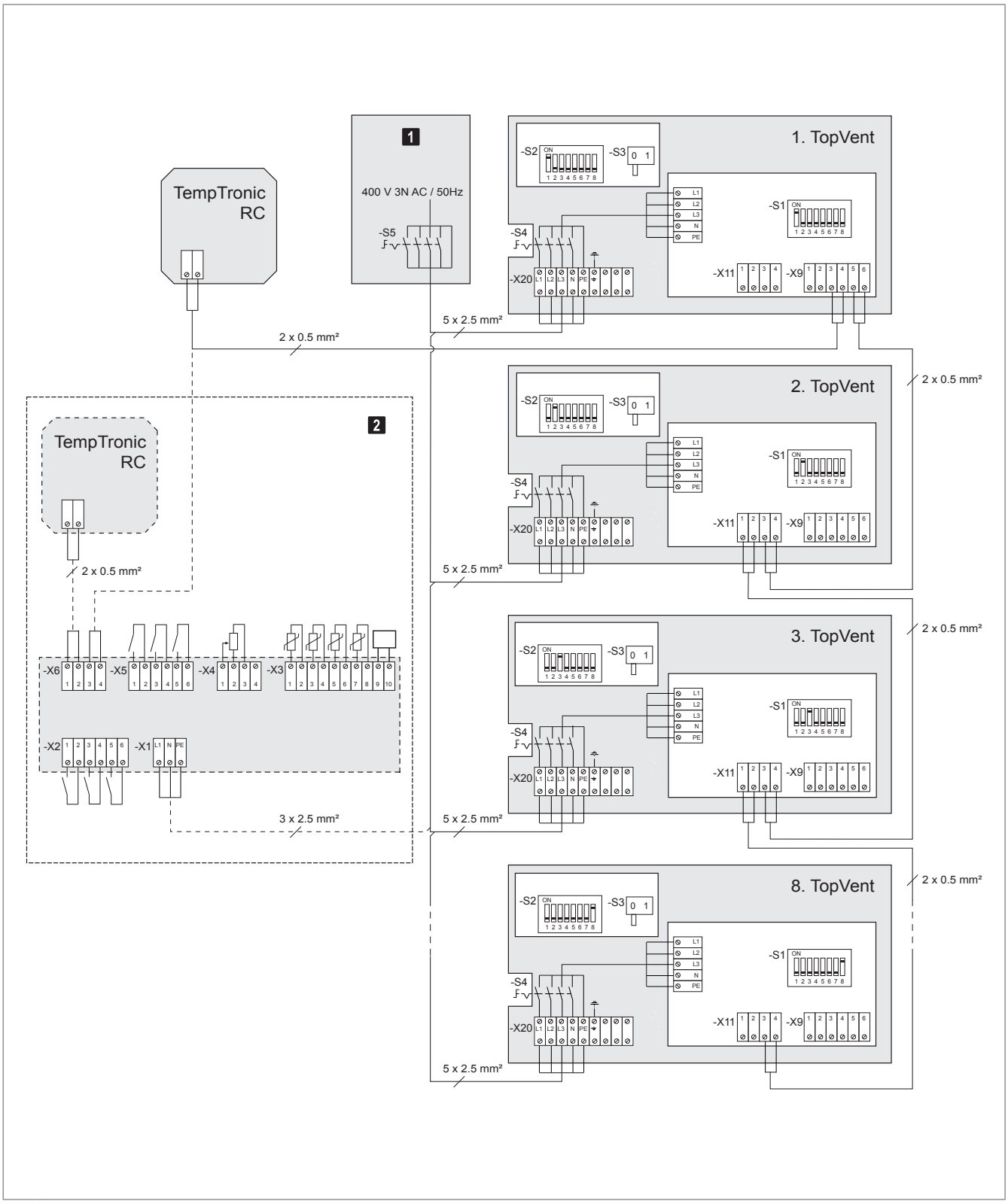

1 Control panel (on site)

2 Variant: connection for TempTronic RC and options module

Fig. B4: Connection diagram

8 Specification texts

8.1 TopVent® DGV – Gas-fired recirculation unit for heating high spaces

Corrosion-resistant Aluzinc sheet metal housing with access panel and four M10 rivet nuts for installation of the optional suspension set for ceiling mounting.
Gas-fired heat exchanger of premium-quality stainless steel, fully-automatic premix burner for low-emission burning of natural gas.
Fan unit consisting of a 2-speed, three-phase external rotor motor with pressure-resistant aluminium sickle-shaped blades, maintenance-free and quiet, with a high degree of efficiency. Motor protection through built-in thermal contacts. Mounted on side of the housing, a terminal box for the connection of the supply voltage and accessories.
Vortex air distributor with concentric outlet nozzle, 12 adjustable vanes and integrated sound attenuation cowl

Technical data

Fan speed	1	2	
Nominal air flow rate (at 20 °C)	_____	_____	m³/h
Floor area reached	_____	_____	m²
Mounting height	_____	_____	m
Nominal heat output	_____	_____	kW
Power consumption	_____	_____	kW
Current consumption	_____	_____	A
Supply voltage	400 V 3N AC		
Frequency	50 Hz		
Protection rating	IP 20		
Gas category	_____		
Gas appliance type	_____		
Gas supply pressure	_____		
Gas connection	_____		
Combustion air connection	DN ___		
Flue gas connection	DN ___		

DGV-6/30
DGV-6/60
DGV-9/60

8.2 Options

Flue gas kit AZF / AZS / AZW
for room-air-independent installation (flue gas evacuation and combustion air supply)

Individual components of flue gas accessories
for the adaptation of the flue gas kit to local conditions

Standard paint finish SL
in the Hoval standard colour red (RAL 3000)

Paint finish as desired AL
in RAL colour No. _____

Suspension set AHS
for mounting the unit on ceiling, exterior paint finish matching the unit

Filter box FK
with 2 class G4 bag filters (according to DIN EN 779), with a differential pressure control device for monitoring the filter

Flat filter box FFK
with 4 pleated cell filters (according to DIN EN 779) with a differential pressure control device for filter monitoring

Acoustic cowl AHD
Insertion attenuation 4 dB

Recirculation silencer USD
as attachment on unit, Aluzinc sheet metal, lined with sound insulation mat, insertion attenuation 3 dB

Air outlet box AK
made of Aluzinc sheet metal, with 4 adjustable outlet grilles (replaces the Air-Injector)

8.3 Control systems

TempTronic RC programmable regulation system with menu guided operation for fully automated operation of TopVent® units:

- TempTronic RC
- Option module OM
- Room temperature average value MRT4
- External room temperature sensor RF
- Actuator Air-Injector VT-G

Hoval

TopVent® NGV

Gas-fired air recirculation unit for heating high spaces
with lower comfort requirements (e.g. high rack storage areas)

C

1 Use _____ 24

2 Construction and operation _____ 24

3 Technical data _____ 27

4 Design example _____ 33

5 Options _____ 34

6 Control systems _____ 34

7 Transport and installation _____ 35

8 Specification texts _____ 38

1 Use

1.1 Intended use

TopVent® NGV units are heaters intended for heating high spaces operating with air recirculation.
Also included under intended use are compliance with the installation, commissioning, operating and maintenance provisions (operating instructions).
Any use beyond this is considered improper. The manufacturer shall not be held responsible for any damage resulting from such use.

1.2 User group

TopVent® NGV units may only be installed, operated and maintained by authorised and instructed personnel who are well acquainted with the units and are informed about possible dangers.
The operating instructions are for English-speaking operating engineers and technicians as well as specialists in building, heating and air technology.

1.3 Hazards

TopVent® NGV units are state-of-the-art and safe to operate. However, despite all precautionary measures taken, there are still some potential hazards which are not immediately obvious, such as:

- Dangers when working with the electrical system
- Dangers when working with components of the gas circuit
- When working on the unit, objects (e.g. tools) could be dropped.
- Malfunctions as a result of defective parts
- Danger caused by coming in contact with hot components when carrying out work inside the unit or on the flue gas system

2 Construction and operation

TopVent® NGV was especially developed for use in high spaces. It
the following functions:

- Heating (with gas-fired heat exchanger)
- Recirculation
- Air distribution via outlet nozzle
- Air filtration (optional)

The unit is mounted under the ceiling and draws in interior air. The air is heated in a gas-fired heat exchanger and blown back into the room through the outlet nozzle.
Thanks to its great output capacity TopVent® NGV has a great range. Therefore, compared to other systems, fewer units are needed to achieve the required conditions.
2 different unit sizes and diverse output levels, as well as a broad range of accessories make possible solutions tailored to the requirements of each individual hall.

2.1 Unit construction

TopVent® NGV consists of the heater unit and the outlet nozzle. Both components are bolted together, but can be dismantled separately again.

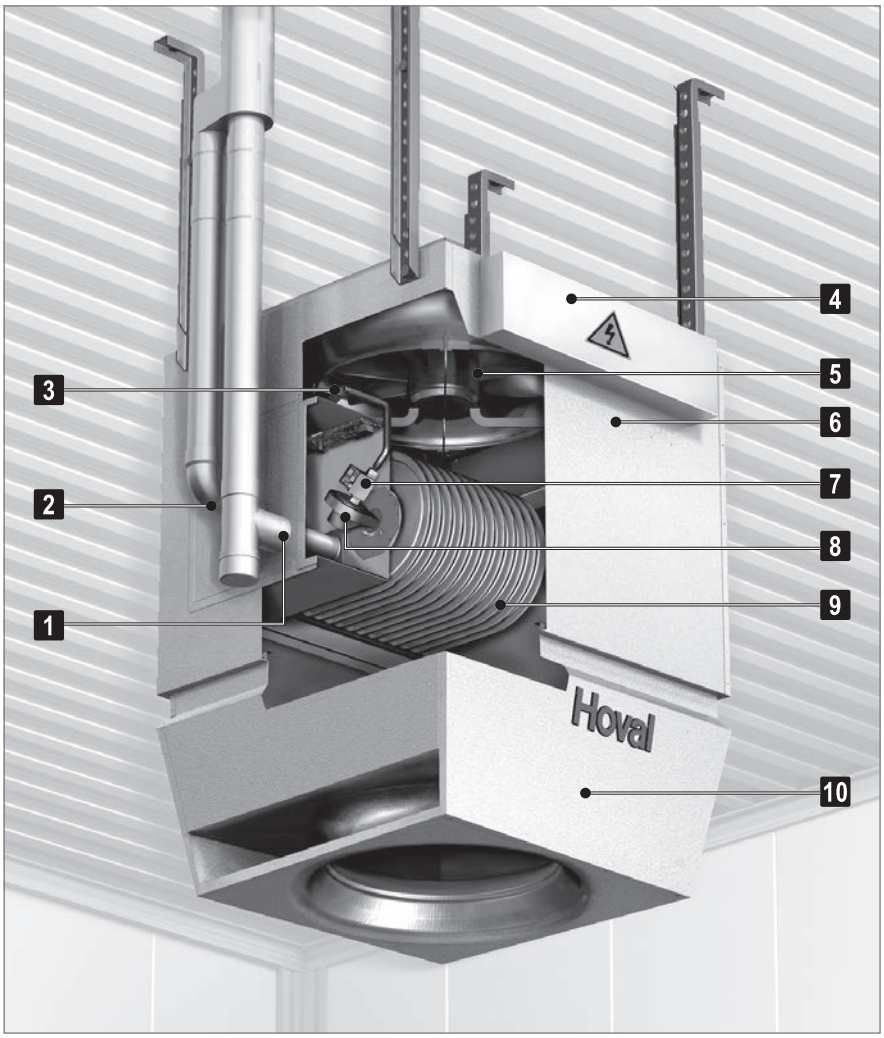

1	**Flue gas connection**
2	**Combustion air connection**
3	**Gas connection**
4	**Terminal box with isolation switch**
5	**Fan:** maintenance-free and low-noise
6	**Housing:** of corrosion-resistant Aluzinc sheet metal
7	**Gas control valve**
8	**Burner unit:** consisting of stainless steel gas blower and premix burner
9	**Heat exchanger:** of stainless steel
10	**Outlet nozzle**

Fig. C1: TopVent® NGV structure

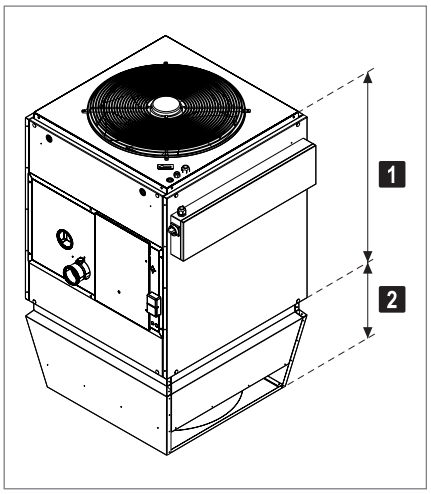

1	Heating section
2	Outlet nozzle

Fig. C2: TopVent® NGV components

2.2 Operating modes

TopVent® NGV operates in the following modes:
- Off
- Recirculation
- Recirculation night
- Recirculation speed 1

TempTronic regulates these modes of operation automatically.

Code	Operating mode	Use	Layout	
OFF	**Off** The fan is switched off. Frost protection for the room remains active. There is no room temperature control.	if the unit is not needed	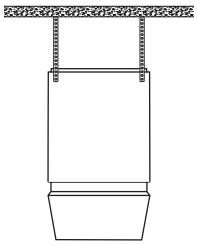	Fan ..... off Heater..... off
REC	**Recirculation** On/off-operation: if heating is required, the unit draws in room air, heats it and returns the warm air back into the room. The room temperature set value day is active.	during room use	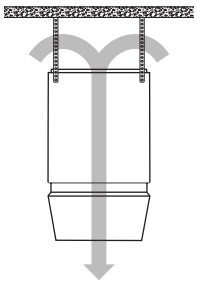	Fan ..... Speed 1 / 2 [1] Heater..... 60…100 % [1] for heat demand
RECN	**Recirculation night** like REC, but with room temperature set value night	during the night and on weekends		
REC1	**Recirculation speed 1** the same as REC, but the unit operates only at fan speed 1 (low air flow rate)	during room use	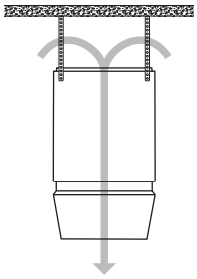	Fan ..... Speed 1 [1] Heater..... 60…100 % [1] for heat demand

Table C1: TopVent® NGV operating modes

Notice
There is only one fan speed for TopVent® units size 6/60. Hence these units operate only at fan speed 2 in the operating modes REC and RECN. The operating mode REC1 is not available.

3 Technical data

3.1 Unit type reference

NGV - 6 / 30 / ...

Unit type
TopVent® NGV

Unit size
6 or 9

Output in kW
30 or 60

Options

Table C2: Unit type reference

3.2 Application limits

Ambient temperature	min.	°C	-15
	max.	°C	35
Supply air temperature	max.	°C	60

The units cannot be used in:
- areas where there is danger of explosion
- places with a corrosive or aggressive environment
- damp locations
- spaces with a large amount of dust

Table C3: TopVent® NGV limits of operation

C

3.3 Air flow rate, gas consumption

Unit type			NGV-6/30		NGV-6/60	NGV-9/60	
Fan speed			**1**	**2**	**2**	**1**	**2**
Fan speed		min^{-1}	720	900	900	670	900
Nominal air flow rate [1]		m³/h	4200	5900	6060	6805	8815
Floor area reached [2]		m²	342	529	529	625	930
Nominal heat input	max.	kW		32.0	66.0		66.0
Nominal heat output	max.	kW		29.2	60.5		60.5
Combustion efficiency [3]		%		min. 91	min. 91		min. 91
Gas consumption							
I_{2ELL}, I_{2ELw}, I_{2H}, I_{2E}, I_{2Esi}, $I_{2E(S)B}$, I_{2Er} (G20) H_i = 9.45 kWh/m³ with 20 / 25 mbar gas supply pressure		m³/h		3.4	7.0		7.0
I_{2ELL} (G25) H_i = 8.125 kWh/m³ with 20 mbar gas supply pressure		m³/h		3.9	8.1		8.1
I_{2L}, I_{2Esi}, $I_{2E(R)B}$, I_{2Er} (G25) H_i = 8.38 kWh/m³ with 25 mbar gas supply pressure		m³/h		3.8	7.9		7.9

1) at an air temperature of 20 °C
2) Mounting height H_{max} = 11 m for a temperature difference between supply air and room air of up to 30 K
3) in accordance with EN 1020

Table C4: TopVent® NGV technical data

3.4 Electrical connections

Unit type		NGV-6/30	NGV-6/60	NGV-9/60
Supply voltage	V AC	400 3N	400 3N	400 3N
Permitted voltage tolerance	%	+10 / -15	+10 / -15	+10 / -15
Frequency	Hz	50	50	50
Power consumption	W	660	660	910
Current consumption	A	1.69	1.69	2.19
Protection rating	–	IP 20	IP 20	IP 20

Table C5: TopVent® NGV electrical connections

3.5 Gas connection

Unit type	NGV-6/30	NGV-6/60	NGV-9/60
Gas category: natural gas	I_{2ELL}, I_{2ELw}, I_{2L}, I_{2H}, I_{2E}, I_{2Esi}, $I_{2E(S)B}$, $I_{2E(R)B}$, I_{2Er}		
Gas appliance type [1)]	B_{23}, C_{13}, C_{33}		
Gas connection	Rp ½"	R ¾"	R ¾"
Combustion air connection	DN 80	DN 100	DN 100
Flue gas connection	DN 80	DN 100	DN 100
Max. length of flue gas duct [2)]	4 m	6 m	6 m
Max. length of flue gas duct if insulated [2)]	8 m	10 m	10 m

[1)] according to method of flue gas evacuation and combustion air supply
[2)] Equivalent length of formed parts:
– 90° elbow.....2 m
– 45° elbow .....1 m
– 90° T-piece ....2 m

Table C6: TopVent® NGV gas circuit connections

3.6 Sound levels

Unit type			NGV-6/30		NGV-6/60	NGV-9/60	
Fan speed			1	2	2	1	2
Sound pressure level (at a distance of 5 m) [1]		dB(A)	47	54	54	50	56
Total sound power level		dB(A)	69	76	76	72	78
Octave sound power level	63 Hz	dB	72	80	80	78	83
	125 Hz	dB	69	76	76	74	82
	250 Hz	dB	72	78	77	74	80
	500 Hz	dB	66	74	73	71	75
	1000 Hz	dB	63	71	71	67	73
	2000 Hz	dB	59	68	67	62	69
	4000 Hz	dB	52	62	61	56	63
	8000 Hz	dB	48	56	56	51	58

[1] with a hemispherical radiation pattern in a low-reflection room

Table C7: TopVent® NGV sound power levels

3.7 Heat output

Air entry temp. [1]		10 °C			15 °C			20 °C		
		Q	t_S	H_{max}	Q	t_S	H_{max}	Q	t_S	H_{max}
Unit type	Fan speed	kW	°C	m	kW	°C	m	kW	°C	m
NGV-6/30	1	29.2	30.9	9.1	29.2	35.9	9.1	29.2	40.9	9.2
	2	29.2	24.8	14.4	29.2	29.8	14.5	29.2	34.8	14.6
NGV-6/60	2	60.5	40.0	10.7	60.5	45.0	18.8	60.5	50.0	10.9
NGV-9/60	1	60.5	36.7	9.2	60.5	41.7	9.2	60.5	46.7	9.3
	2	60.5	30.6	13.0	60.5	35.6	13.1	60.5	40.6	13.2

Legend:
Q = Nominal heat output
t_S = Maximum supply air temperature
H_{max} = Maximum mounting height

[1] The supply air temperature is equivalent to the room temperature.

Table C8: TopVent® NGV heat output, supply air temperatures and mounting height

C

3.8 Minimum and maximum distances

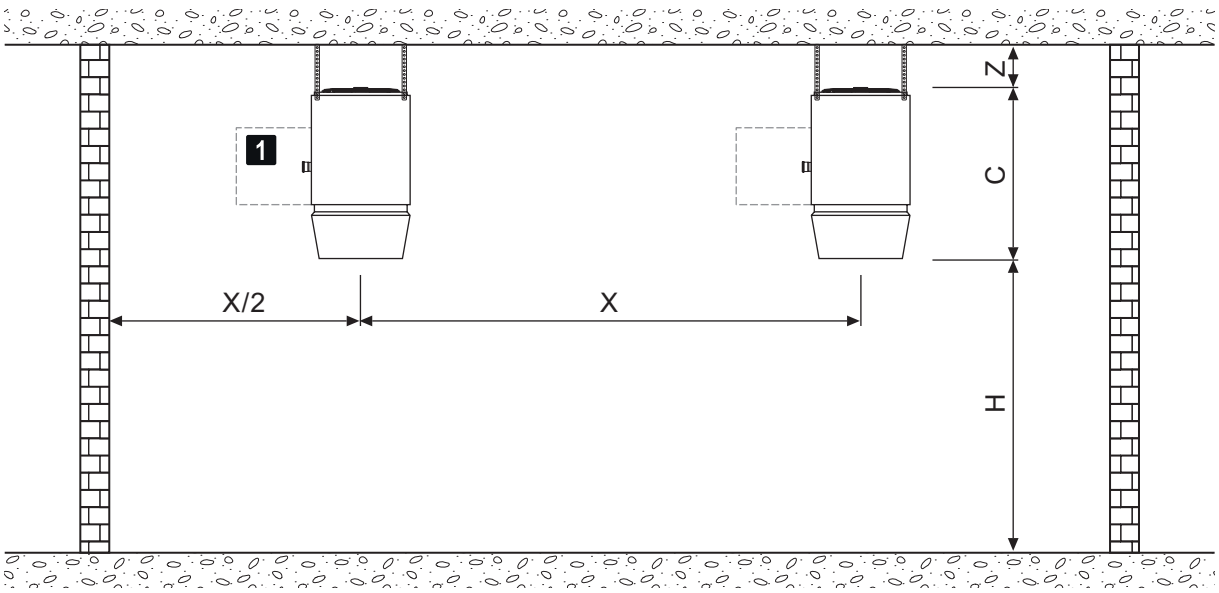

Unit type			NGV-6		NGV-9	
Fan speed			**1**	**2**	**1**	**2**
Height of unit C		mm	1562	1562	1640	1640
Unit clearance X	min.	m	10.0	11.5	12.5	14.0
	max.	m	18.5	23.0	25.0	30.5
Mounting height H	min.	m	4.0	4.0	5.0	5.0
Distance from ceiling Z	min.	m	0.3	0.3	0.4	0.4

1 Allow a free space of 1.5 m for service and maintenance.

Table C9: Minimum and maximum distances

3.9 Dimensions and weight

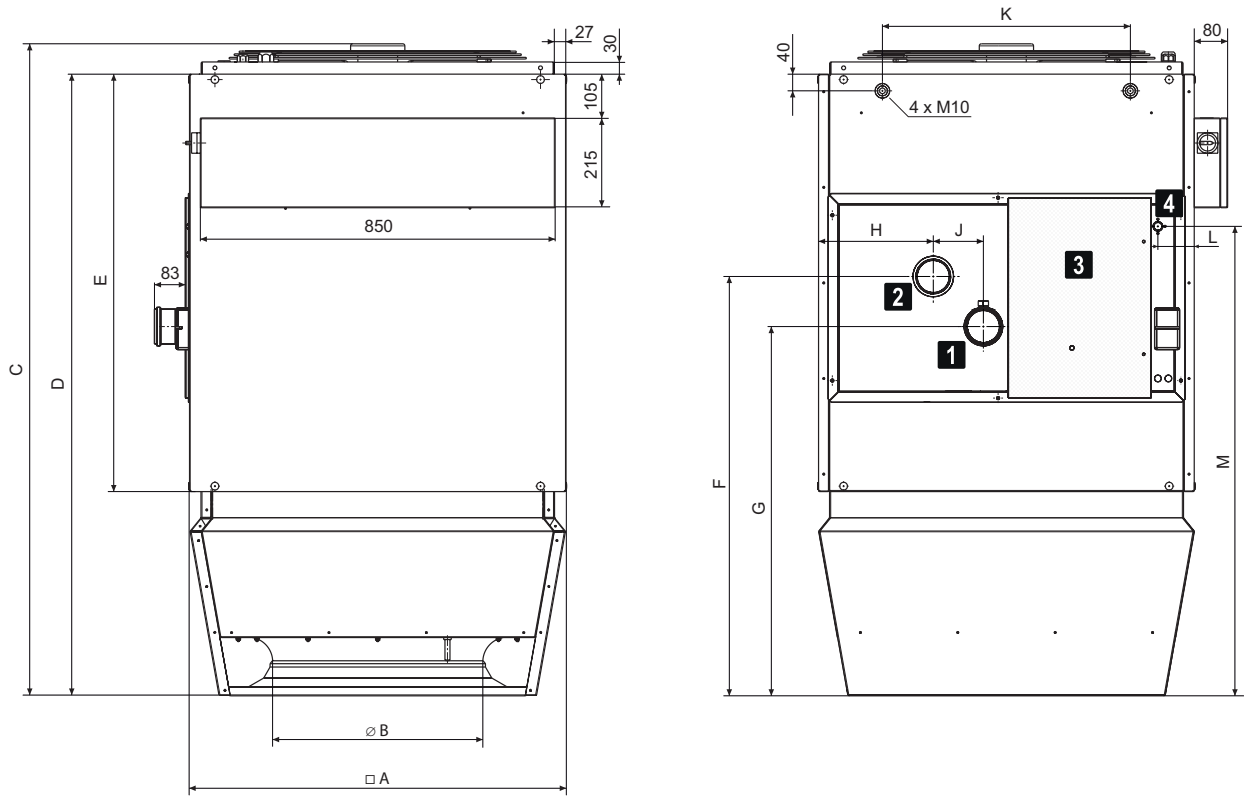

Unit type		NGV-6/30	NGV-6/60	NGV-9/60
A	mm	900	900	1100
B	mm	500	500	630
C	mm	1562	1562	1640
D	mm	1490	1490	1570
E	mm	1000	1000	1000
F	mm	946	974	1048
G	mm	836	834	908
H	mm	258	237	338
J	mm	110	140	140
K	mm	594	594	846
L	mm	87	73	172
M	mm	1057	1128	1203
Weight	kg	117	127	160

1	Flue gas connection with measuring opening
2	Combustion air connection
3	Inspection door with measuring opening for combustion air temperature
4	Gas connection

Table C10: TopVent® NGV dimensions and weights

3.10 Air flow rate with additional pressure drops

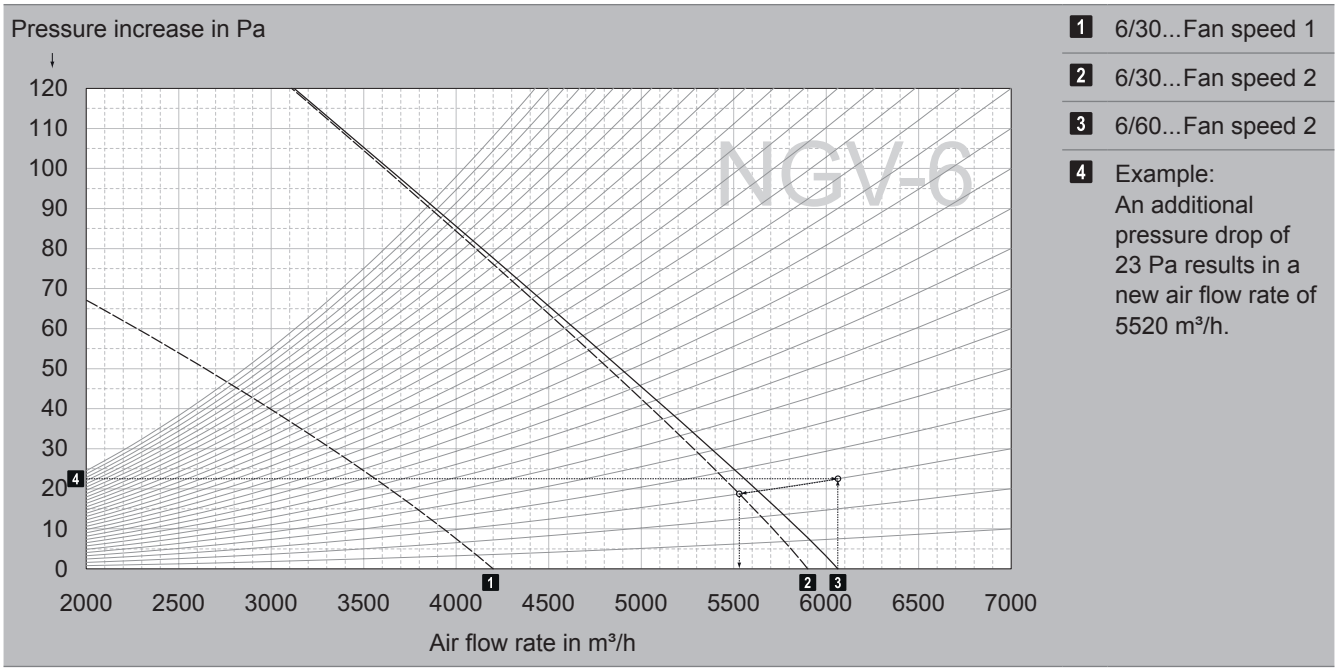

Diagram C1: TopVent® NGV-6 air flow rate for additional pressure drop

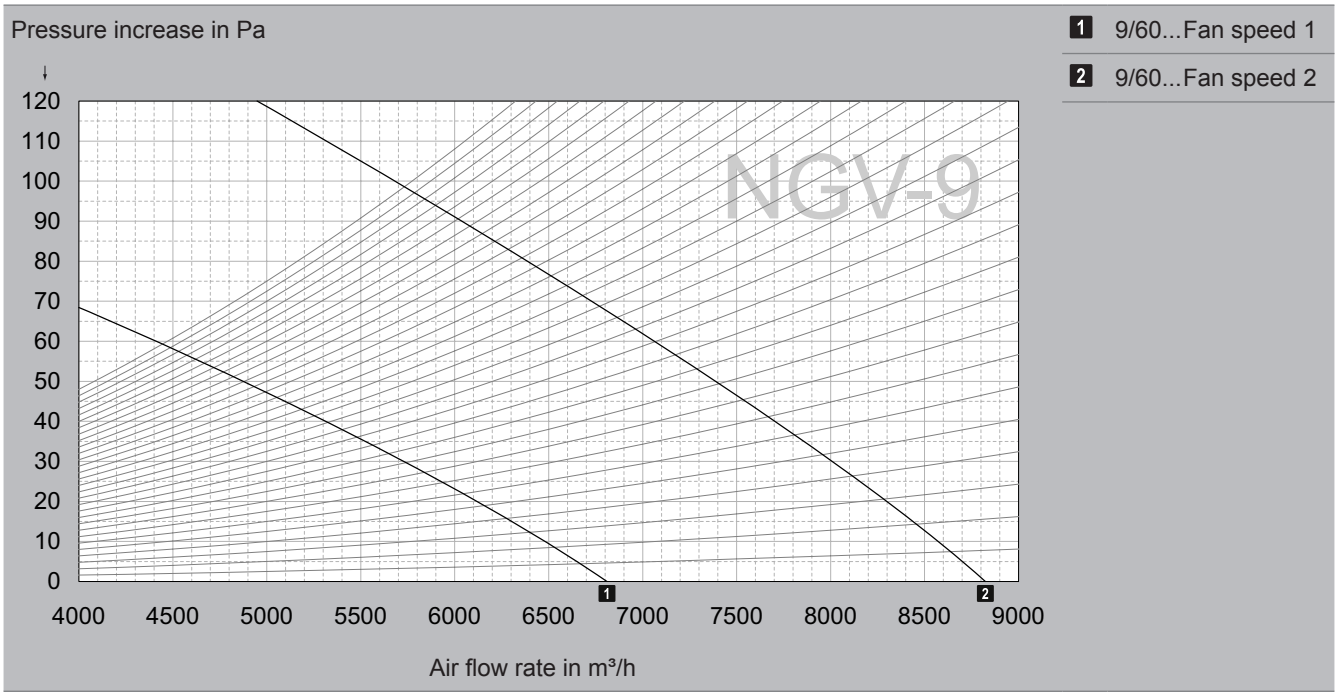

Diagram C2: TopVent® NGV-9 air flow rate for additional pressure drop

4 Design example

Input data ■ Geometry of the room (plan) ■ Mounting height (= distance between floor and lower edge of the TopVent® unit) ■ Heating load ■ Desired room temperature ■ Comfort requirements (acoustic)	**Example** Dimensions.....50 x 70 m Mounting height.....10 m Heating load .....350 kW Room temperature.....20 °C Comfort requirements.Standard
Comfort requirements Define the fan speed in accordance with the acoustic requirements: ■ Low noise level → fan speed 1 ■ Normal noise level → fan speed 2	Standard → fan speed 2
Mounting height ■ With the minimum mounting height (Table C9) check which units can be used. ■ With the maximum mounting height (Table C8) check which units can be used. ■ Strike units which are not adequate.	NGV-6/30 ✓ NGV-6/60 ✓ NGV-9/60 ✓
Minimum number a) Minimum number based on surface In Table C4 the maximum floor area which can be covered by TopVent® NGV can be seen. For a known floor area it is then possible to calculate - for each unit size - the minimum number of units required. b) Minimum number based on length x width Depending on the shape of the hall and in relation to its length and width, a certain number of units will be required. This can be calculated from the maximum distances between the units and between them and the wall (Table C9). c) Minimum number based on heat load Depending on the total heat output required, a minimum number of units can be calculated for each unit size (see Table C8). The highest number from results a), b) and c) is the actual minimum number required.	Calculate the minimum number of units according to a), b) and c) and enter it in a table for each type of unit. Take the highest value as the minimum quantity.

Type	a)	b)	c)		
NGV-6/30	7	9	12		12
NGV-6/60	7	9	6	➡	9
NGV-9/60	4	6	6		6

Definitive number of units Choose the final solution from the remaining possibilities, depending on the geometry of the hall and the costs.	Select 6 units NGV-9/60.

C

5 Options

TopVent® NGV can be adapted to the requirements of a specific project thanks to a range of optional equipment. You will find a detailed description of all optional components in Part G 'Options' of this handbook.

Option	Use
Flue gas accessories	for simple installation independently of room air
Paint finish	in the Hoval standard colour red or in any colour required
Suspension set	for mounting the unit on ceiling
Filter box	to filter recirculation air
Recirculation silencer	to reduce noise levels in the room (reduced noise reflection from the ceiling)

Table C11: Availability of options for TopVent® NGV

6 Control systems

TopVent® NGV units are controlled by TempTronic RC. This programmable control unit, developed especially for TopVent® units, offers the following advantages:

- Regulation of the room temperature
- 3 set point values can be set (Room temperature day, Room temperature night and Frost protection temperature)
- Control of operating modes according to week programme and calendar
- Registration of unit malfunctions in an alarm list
- Password protection for user and service personnel
- Menu-guided operation via a 4-line display
- Integrated room temperature sensor

You will find a detailed description of TempTronic in Part H 'Control systems' of this handbook.

Notice
In indoor climate systems in which TopVent® NGV units are used together with RoofVent® fresh air handling units, Hoval DigiNet takes over all control and regulation functions.

7 Transport and installation

7.1 Installation

Caution
Risk of injury from incorrect handling. Have transport and assembly work carried out by trained specialists!

For the purposes of installation the units are provided with four M10 rivet nuts with hexagon bolts and washers. The following guidelines are important when preparing for assembly:

- Attach the TopVent® unit using a suspension set (option) or by means of steel flat, slotted steel flat, angles, steel cables, etc.
- Secure the unit only to ceilings of fireproof materials and with sufficient load-bearing capacity.
- Do not use eyebolts.
- Do not install any additional loads.
- The TopVent® unit must be installed horizontally.
- Non-vertical suspensions are permissible up to a maximum angle of 45°.

7.2 Installation of the flue gas evacuation and the combustion air supply

Caution
Risk of injury from incorrect handling. Installation of the flue gas evacuation and the combustion air supply may only be carried out by specialists!

Observe national / local regulations when planning the flue gas evacuation and the combustion air supply. From an early stage, coordinate the installation with the responsible district chimney sweep authorities and obtain the necessary authorisation from the local building authority.
Please note the following:

- The units can be installed as room-air-dependent (Type B_{23}) or room-air-independent (Type C_{13}, C_{33}) appliances.
- If the unit is room-air-independent, equip it with the optional flue gas kit.
- For room-air-dependent operation the combustion air is taken directly from the room in which the unit is installed. Ensure the room is sufficiently ventilated and that the combustion air is free from pollutants and aggressive substances (halogens such as chlorides, fluorides, etc.).
- Observe the maximum lengths given in Table C6 (see chapter 3 'Technical data').

7.3 Gas connection

Caution
Risk of injury from incorrect handling. The gas connection may only be carried out by specialists authorised by the gas supply company!

Please note the following:

- The fuel used is natural gas. Check the type of gas the unit is set to work with and, if necessary, have Hoval Customer Service reset the unit to the type of gas supplied locally.
- During operation of the unit, the required quantity of gas and the necessary pressure of gas must be present constantly.
- Connect the gas supply line with appropriate bolted joints which can be loosened, tension-free and vibration-free.
- The connection of the unit to the gas supply line must be gas-tight.
- Ensure that a gas pressure regulator and a cut-off-valve (not part of the scope of supply) are installed directly before the unit.

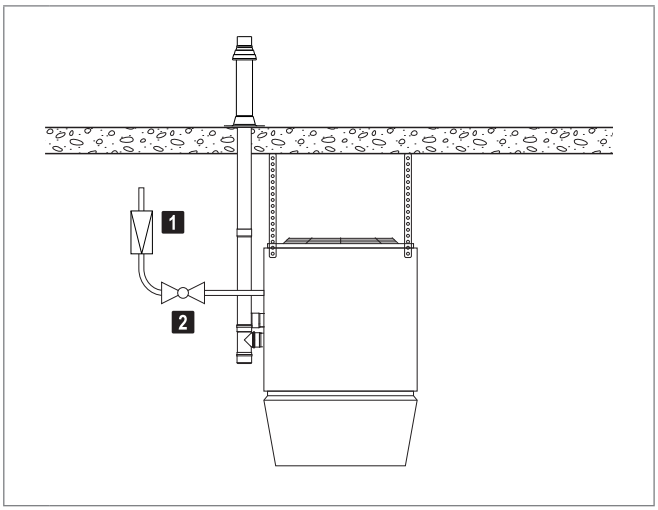

1 Gas pressure regulator (20…50 mbar)

Recommended settings:
– Natural gas .. 20 mbar
– Liquid gas .... 30 mbar

2 Cut-off-valve

Fig. C3: Gas pressure regulator and cut-off-valve in the gas supply line

C

7.4 Electrical installation

Caution
Danger from electric current. The electrical installation is to be carried out only by a qualified electrician!

- Observe all relevant regulations (e.g. EN 60204-1).
- Check whether the local operating voltage, frequency and fuse protection match the data on the type plate. If there are any discrepancies, the unit must not be connected!
- Cable cross-sections must be selected according to technical regulations, e. g. VDE 0100.
- Electrical installation to be carried out according to wiring diagram.
- Do not forget the master switch for the complete installation.

A TempTronic can control up to 8 TopVent® units simultaneously:
- Connect TempTronic and the units to each other via a system bus.
- Assign a number to each unit:
  – micro switch S1 on the power module
  – micro switch S2 on the burner control

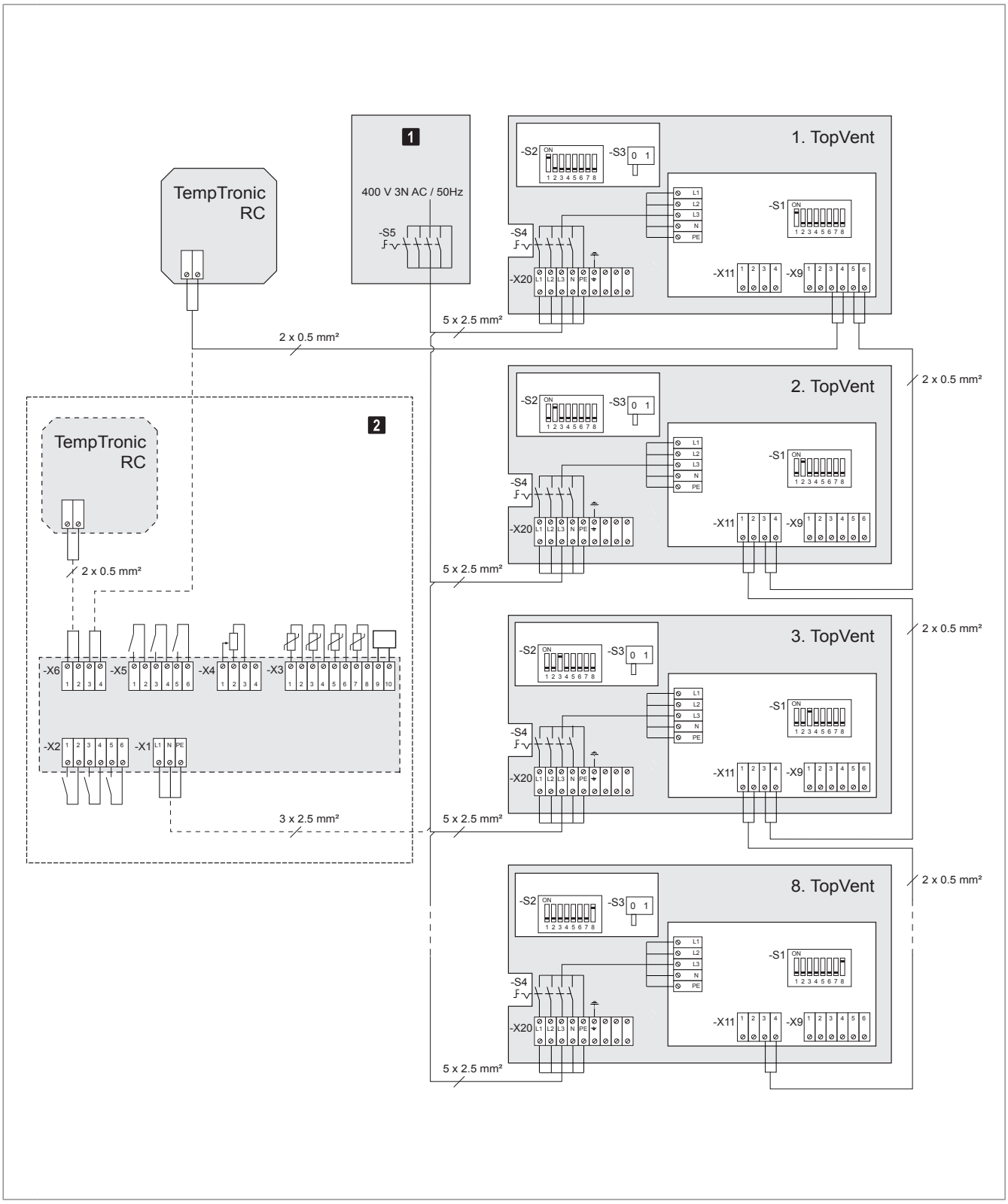

1 Control panel (on site)

2 Variant: connection for TempTronic RC and options module

Fig. C4: Connection diagram

8 Specification texts

8.1 TopVent® NGV – Gas-fired recirculation unit for heating high spaces

Corrosion-resistant Aluzinc sheet metal housing with access panel and four M10 rivet nuts for installation of the optional suspension set for ceiling mounting.
Gas-fired heat exchanger of premium-quality stainless steel, fully-automatic premix burner for low-emission burning of natural gas.
Fan unit consisting of a 2-speed, three-phase external rotor motor with pressure-resistant aluminium sickle-shaped blades, maintenance-free and quiet, with a high degree of efficiency. Motor protection through built-in thermal contacts.
Mounted on side of the housing, a terminal box for the connection of the supply voltage and accessories.
Concentric outlet nozzle.

Technical data

Fan speed	1	2	
Nominal air flow rate (at 20 °C)	_____	_____	m³/h
Floor area reached	_____	_____	m²
Mounting height	_____	_____	m
Nominal heat output	_____	_____	kW
Power consumption	_____	_____	kW
Current consumption	_____	_____	A
Supply voltage	400 V 3N AC		
Frequency	50 Hz		
Protection rating	IP 20		
Gas category	_____		
Gas appliance type	_____		
Gas supply pressure	_____		
Gas connection	_____		
Combustion air connection	DN ___		
Flue gas connection	DN ___		

NGV-6/30
NGV-6/60
NGV-9/60

8.2 Options

Flue gas kit AZF / AZS / AZW
for room-air-independent installation (flue gas evacuation and combustion air supply)

Individual components of flue gas accessories
for the adaptation of the flue gas kit to local conditions

Standard paint finish SL
in the Hoval standard colour red (RAL 3000)

Paint finish as desired AL
in RAL colour No. _____

Suspension set AHS
for mounting the unit on ceiling, exterior paint finish matching the unit

Filter box FK
with 2 class G4 bag filters (according to DIN EN 779), with a differential pressure control device for monitoring the filter

Flat filter box FFK
with 4 pleated cell filters (according to DIN EN 779) with a differential pressure control device for filter monitoring

Recirculation silencer USD
as attachment on unit, Aluzinc sheet metal, lined with sound insulation mat, insertion attenuation 3 dB

8.3 Control systems

TempTronic RC programmable regulation system with menu guided operation for fully automated operation of TopVent® units:

- TempTronic RC
- Option module OM
- Room temperature average value MRT4
- External room temperature sensor RF

Hoval

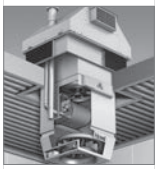

TopVent® commercial GA

Gas-fired roof-mounted unit for ventilating and heating high spaces

D

1 Use _____ 40

2 Construction and operation _____ 40

3 Technical data _____ 44

4 Design example _____ 49

5 Options _____ 50

6 Control systems _____ 50

7 Transport and installation _____ 50

8 Specification texts _____ 53

1 Use

1.1 Intended use

TopVent® commercial GA units are used for the heating of high spaces, operating with fresh air, mixed air or recirculating air.
Also included under intended use are compliance with the installation, commissioning, operating and maintenance provisions (operating instructions).
Any use beyond this is considered improper. The manufacturer shall not be held responsible for any damage resulting from such use.

1.2 User group

TopVent® commercial GA units may only be installed, operated and maintained by authorised and instructed personnel who are well acquainted with the units and are informed about possible dangers.
The operating instructions are for English-speaking operating engineers and technicians as well as specialists in building, heating and air technology.

1.3 Hazards

TopVent® commercial GA units are state-of-the-art and are safe to operate. However, despite all precautionary measures taken, there are still some potential hazards which are not immediately obvious, such as:

- Dangers when working with the electrical system
- Dangers when working with components of the gas circuit
- When working on the unit, objects (e.g. tools) could be dropped.
- Malfunctions as a result of defective parts
- Danger caused by coming in contact with hot components when carrying out work inside the unit or on the flue gas system

2 Construction and operation

TopVent® commercial GA was especially developed for use in high spaces. As it is installed on the roof it does not project far into the room. It fulfills the following functions:

- Heating (with gas-fired heat exchanger)
- Fresh air supply
- Mixed air operation
- Recirculation
- Air distribution via Air-Injector
- Air filtration

The unit is installed in the roof with the corresponding roof frame. According to the position of the dampers, it draws in fresh air and/or interior air, filters it, heats it in the gas-fired heat exchanger and injects it into the interior through the Air-Injector.
Thanks to its high performance and efficient air distribution the TopVent® commercial GA covers a large area. Therefore, compared to other systems, fewer units are needed to achieve the required conditions.

2.1 Unit construction

TopVent® commercial GA consists of:

- Roof hood
- Mixed air box
- Roof frame
- Heating section
- Air-Injector
- Flue gas kit

2.2 Air distribution with the Air-Injector

The patented air distributor – called the Air-Injector – is the core element. The air discharge angle is set by means of the adjustable guide vanes. It depends on the air flow rate, the mounting height and the temperature difference between the supply air and room air. The air is therefore blown into the room vertically downward, conically or horizontally. This ensures that:

- with each unit a large area of the hall can be covered,
- the occupied area is draught-free,
- the temperature stratification in the room is reduced, thus saving energy.

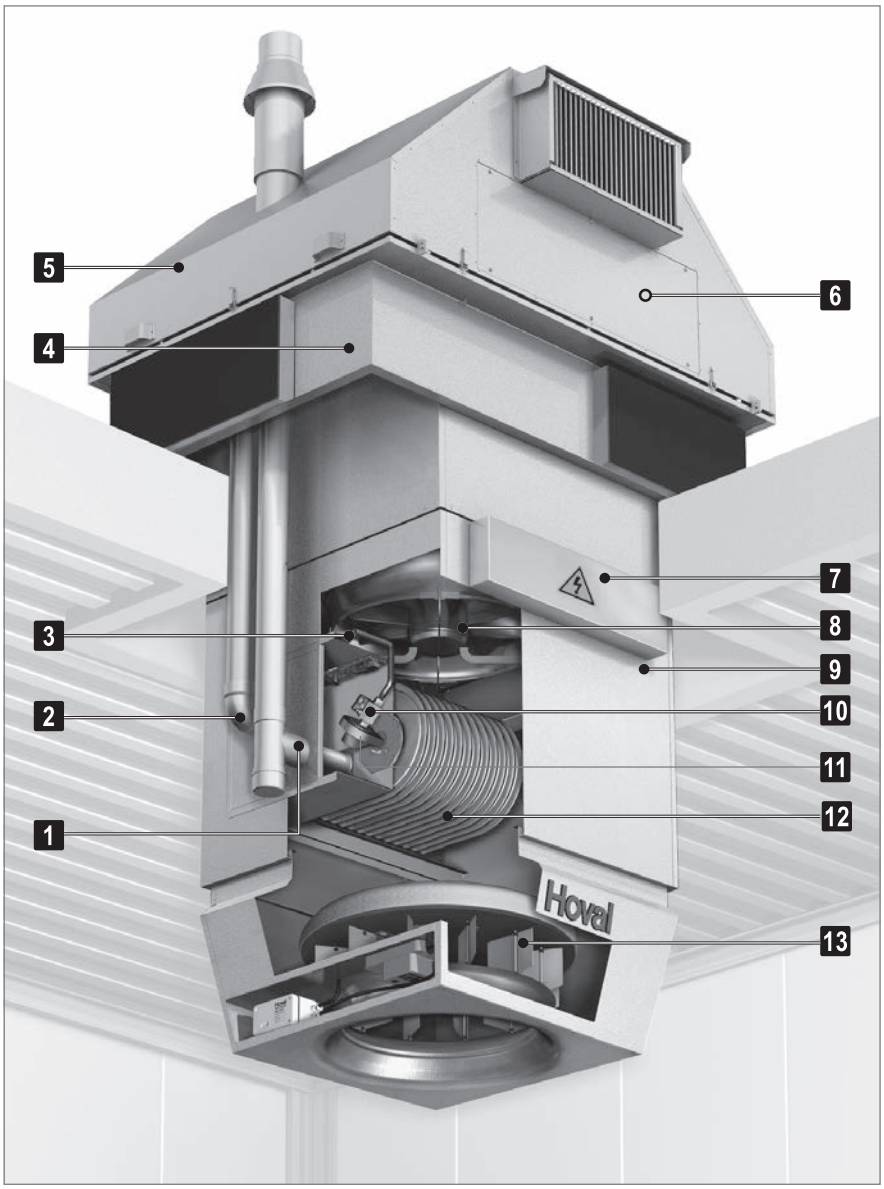

1	**Flue gas connection**
2	**Combustion air connection**
3	**Gas connection**
4	**Roof frame:** made of sheet steel, painted black
5	**Roof hood:** insulated, with 4 handles easy to remove, with 2 weather grilles, 2 G4 filters and filter pressure switch
6	**Mixed air box:** with fresh air damper and recirculation air damper linked to move in opposite directions, and actuator, insulated inside
7	**Terminal box with isolation switch**
8	**Fan:** maintenance-free and low-noise
9	**Housing:** of corrosion-resistant Aluzinc sheet metal
10	**Gas control valve**
11	**Burner unit:** consisting of stainless steel gas blower and premix burner
12	**Heat exchanger:** of stainless steel
13	**Air-Injector:** patented, automatically adjustable vortex air distributor for draught-free air distribution over a large area (incl. actuator)

Fig. D1: TopVent® commercial GA structure

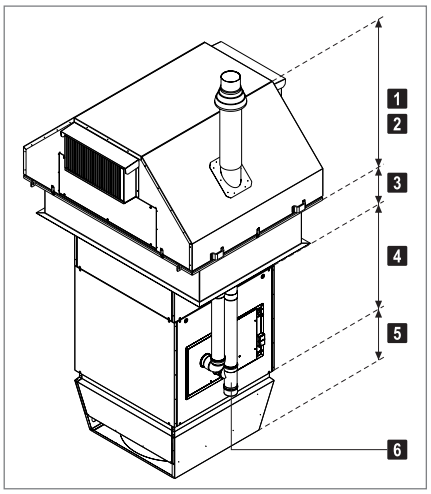

1	Roof hood
2	Mixed air box
3	Roof frame
4	Heating section
5	Air-Injector
6	Flue gas kit

Fig. D2: TopVent® commercial GA components

D

2.3 Operating modes

TopVent® commercial GA operates in the following modes:

- Off
- Supply air speed 2
- Supply air speed 1
- Recirculation
- Recirculation night
- Recirculation speed 1

TempTronic regulates these modes of operation automatically.

Code	Operating mode	Use	Layout	
OFF	**Off** The fan is switched off. Frost protection for the room remains active. There is no room temperature control.	if the unit is not needed	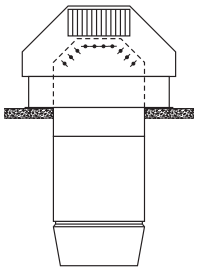	Fan ..... off Fresh air damper..... closed Heater..... off
SA2	**Supply air speed 2** The TopVent® unit blows fresh air into the room. A fixed proportion of fresh air is set. The heating is regulated according to heating requirements. The room temperature set value day is active. The unit operates at speed 2 (high air flow rate).	during room use	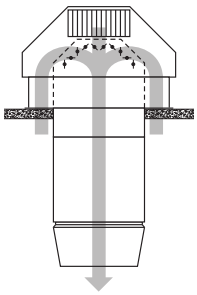	Fan ..... Speed 2 Fresh air damper..... 20 % open [1] Heater..... 60…100 % [2] [1] percentage is adjustable [2] for heat demand
SA1	**Supply air speed 1** the same as SA2, but the unit operates only at fan speed 1 (low air flow rate)	during room use	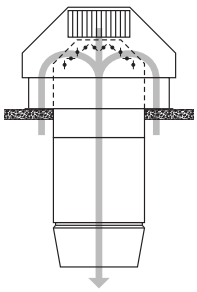	Fan ..... Speed 1 Fresh air damper..... 20 % open [1] Heater..... 60…100 % [2] [1] percentage is adjustable [2] for heat demand
REC	**Recirculation** On/off-operation: if heating is required, the unit draws in room air, heats it and returns the warm air back into the room. The room temperature set value day is active.	For pre-heating	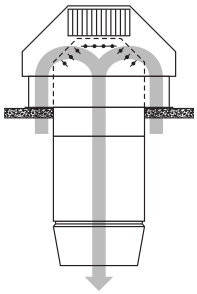	Fan ..... Speed 1 / 2 [1] Fresh air damper..... closed Heater..... 60…100 % [1] for heat demand
RECN	**Recirculation night** like REC, but with room temperature set value night	during the night and on weekends		

REC1	**Recirculation speed 1** the same as REC, but the unit operates only at fan speed 1 (low air flow rate)	For special cases	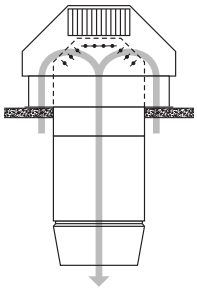	Fan ..... Speed 1 [1)] Fresh air damper..... closed Heater..... 60…100 % [1)] for heat demand

Table D1: TopVent® commercial GA operating modes

D

3 Technical data

3.1 Unit type reference

GA - 9 / 60 / ...

Unit type
TopVent® commercial GA

Unit size
9

Output in kW
60

Options

Table D2: Unit type reference

3.2 Application limits

Ambient temperature	min.	°C	-15
	max.	°C	35
Supply air temperature	max.	°C	60

The units cannot be used in:
- areas where there is danger of explosion
- places with a corrosive or aggressive environment
- damp locations
- spaces with a large amount of dust

Table D3: TopVent® commercial GA limits of operation

3.3 Air flow rate, gas consumption

Unit type			GA-9/60	
Fan speed			**1**	**2**
Fan speed		min^{-1}	910	1280
Nominal air flow rate [1]		m³/h	5235	6800
Floor area reached [2]		m²	441	625
Nominal heat input	max.	kW		66.0
Nominal heat output	max.	kW		60.5
Combustion efficiency [3]		%		min. 91
Gas consumption				
I_{2ELL}, I_{2ELw}, I_{2H}, I_{2E}, I_{2Esi}, $I_{2E(S)B}$, I_{2Er} (G20) H_i = 9.45 kWh/m³ with 20 / 25 mbar gas supply pressure		m³/h		7.0
I_{2ELL} (G25) H_i = 8.125 kWh/m³ with 20 mbar gas supply pressure		m³/h		8.1
I_{2L}, I_{2Esi}, $I_{2E(R)B}$, I_{2Er} (G25) H_i = 8.38 kWh/m³ with 25 mbar gas supply pressure		m³/h		7.9

1) at an air temperature of 20 °C
2) Mounting height H_{max} = 11 m for a temperature difference between supply air and room air of up to 30 K
3) in accordance with EN 1020

Table D4: TopVent® commercial GA technical data

3.4 Electrical connections

Unit type		GA-9/60
Supply voltage	V AC	400 3N
Permitted voltage tolerance	%	+10 / -15
Frequency	Hz	50
Power consumption	W	1080
Current consumption	A	2.65
Protection rating	–	IP 20

Table D5: TopVent® commercial GA electrical connections

3.5 Gas connection

Unit type	GA-9/60
Gas category: natural gas	I_{2ELL}, I_{2ELw}, I_{2L}, I_{2H}, I_{2E}, I_{2Esi}, $I_{2E(S)B}$, $I_{2E(R)B}$, I_{2Er}
Gas appliance type [1]	C_{33}
Gas connection	R ¾"
Combustion air connection	DN 100
Flue gas connection	DN 100

[1] according to method of flue gas evacuation and combustion air supply
[2] Equivalent length of formed parts:
– 90° elbow.....2 m
– 45° elbow .....1 m
– 90° T-piece ....2 m

Table D6: TopVent® commercial GA gas connection

D

3.6 Sound levels

Unit type GA-9/60			In the open air		In the room	
Fan speed			1	2	1	2
Sound pressure level (at a distance of 5 m) [1]		dB(A)	40	47	48	51
Total sound power level		dB(A)	62	69	70	73
Octave sound power level	63 Hz	dB	72	76	75	78
	125 Hz	dB	72	74	73	77
	250 Hz	dB	66	74	73	75
	500 Hz	dB	61	68	68	70
	1000 Hz	dB	56	61	64	68
	2000 Hz	dB	50	57	59	64
	4000 Hz	dB	44	47	53	58
	8000 Hz	dB	34	36	48	53

[1] with a hemispherical radiation pattern in a low-reflection room

Table D7: TopVent® commercial GA sound power levels

3.7 Heat output

Air entry temp. [1]		10 °C			15 °C			20 °C		
	Fan	Q	t_S	H_{max}	Q	t_S	H_{max}	Q	t_S	H_{max}
Unit type	speed	kW	°C	m	kW	°C	m	kW	°C	m
GA-9/60	1	60.5	40.7	6.9	60.5	44.7	7.0	60.5	48.7	7.2
	2	60.5	32.7	9.8	60.5	36.7	10.1	60.5	40.7	10.4

Legend:
Q = Nominal heat output
t_S = Maximum supply air temperature
H_{max} = Maximum mounting height

[1] The entry air temperature (10/15/20 °C) corresponds to the room temperature. The heating outputs given refer to a fresh air proportion of 20 % (at -10 °C); i.e. the mixed air temperatures before the heating coil are 6/10/15 °C.

Table D8: TopVent® commercial GA heat output, supply air temperatures and mounting height

3.8 Minimum and maximum distances

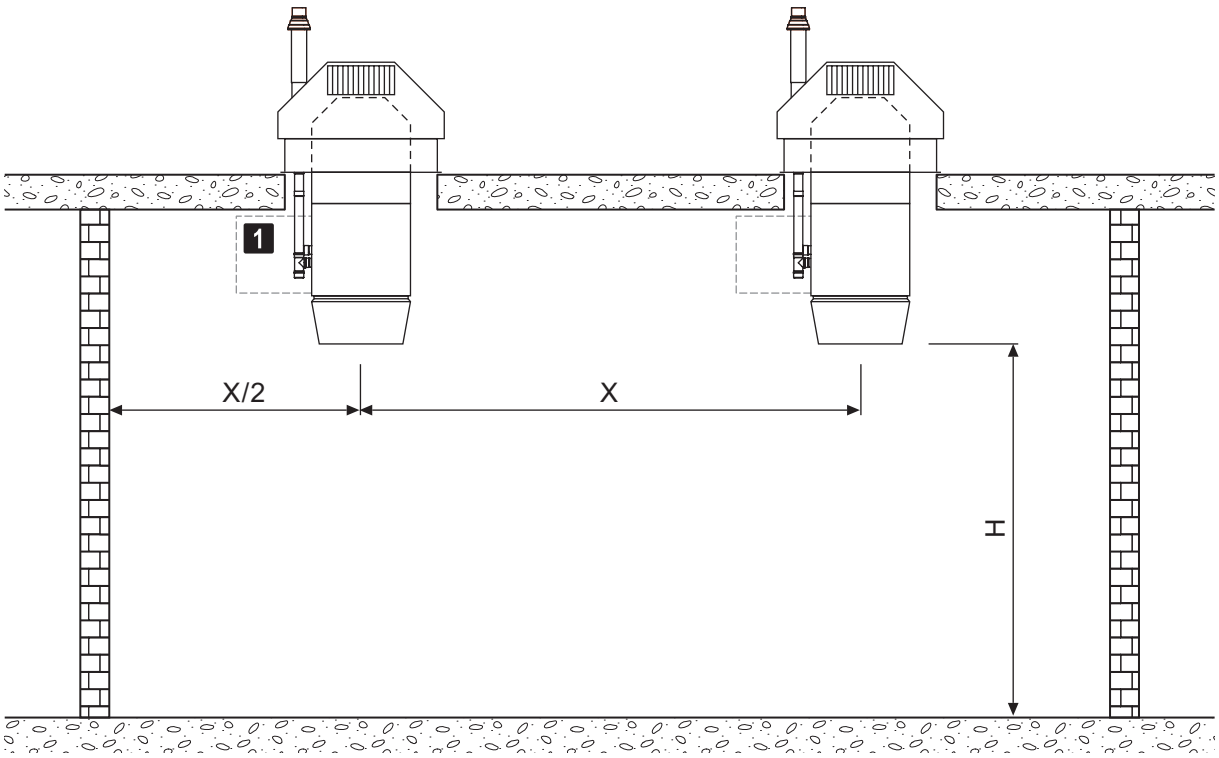

Unit type			GA-9	
Fan speed			1	2
Unit clearance X	min.	m	11.0	12.5
	max.	m	21.0	25.0
Mounting height H	min.	m	5.0	5.0

1 Allow a free space of 1.5 m for service and maintenance.

Table D9: Minimum and maximum distances

3.9 Dimensions and weight

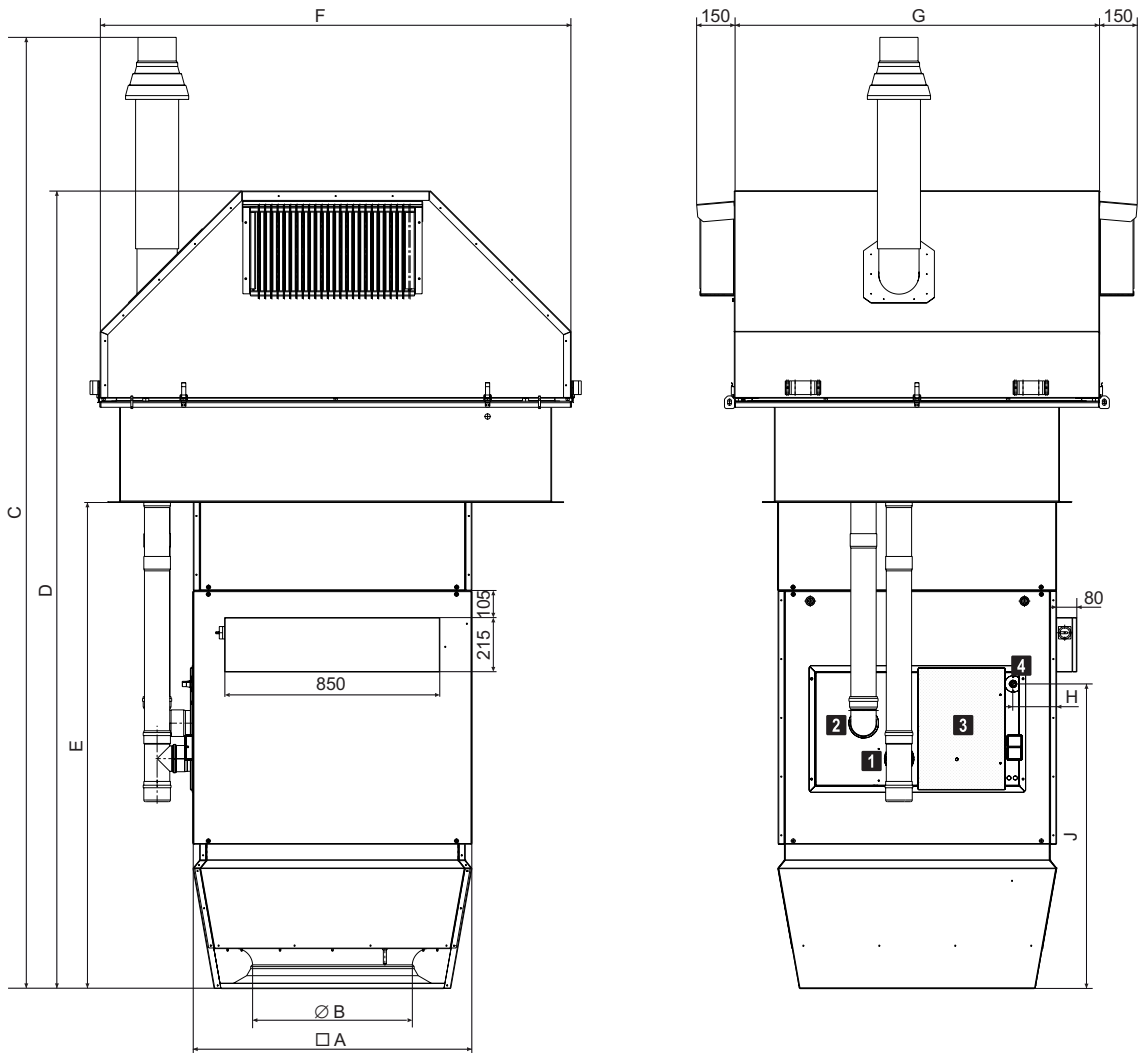

Unit type		GA-9/60
A	mm	1100
B	mm	630
C	mm	3757
D	mm	3150
E	mm	1920
F	mm	1860
G	mm	1442
H	mm	172
J	mm	1203
Weight	kg	510

Roof frame

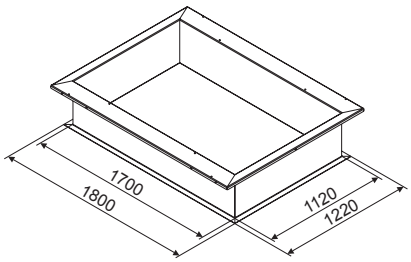

1	Flue gas connection with measuring opening
2	Combustion air connection
3	Inspection door with measuring opening for combustion air temperature
4	Gas connection

Table D10: TopVent® commercial GA dimensions and weights

3.10 Air flow rate with additional pressure drops

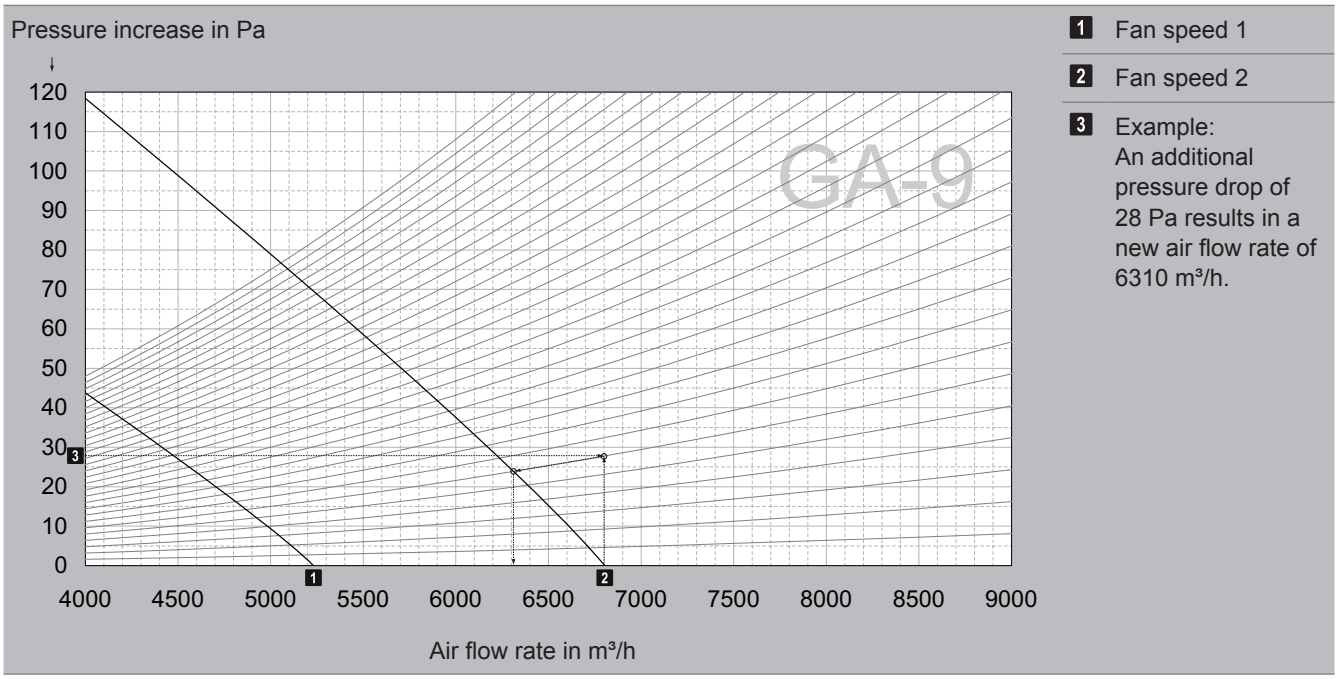

Diagram D1: TopVent® commercial GA-9 air flow rate for additional pressure drop

4 Design example

Input data ■ Geometry of the room (plan) ■ Mounting height (= distance between floor and lower edge of the TopVent® unit) ■ Heating load ■ Desired room temperature ■ Comfort requirements (acoustic) ■ Fresh air temperature ■ Minimum fresh air volume (the fresh air proportion can be adjusted from 0 % to 100 %, however, for energy economy it should be kept to a minimum under design conditions).	**Example** Dimensions..... 50 x 70 m Mounting height..... 10 m Heating load ..... 350 kW Room temperature..... 20 °C Comfort requirements..... Standard Fresh air temperature..... -10 °C Minimum fresh air volume ..... 8 000 m³/h
Comfort requirements Define the fan speed in accordance with the acoustic requirements: ■ Low noise level → fan speed 1 ■ Normal noise level → fan speed 2	Standard → fan speed 2
Mounting height ■ With the minimum mounting height (Table D9) check which units can be used. ■ With the maximum mounting height (Table D8) check which units can be used.	GA-9/60 ✓
Minimum number a) Minimum number based on surface In Table D4 the maximum floor area which can be covered by TopVent® commercial GA can be seen. For a known surface it is then possible to calculate the minimum number of units required. b) Minimum number based on length x width Depending on the shape of the hall and in relation to its length and width, a certain number of units will be required. This can be calculated from the maximum distances between the units and between them and the wall (Table D9). c) Minimum number based on heat load Depending on the total heat output required, a minimum number of units can be calculated (see Table D8). The highest number from results a), b) and c) is the actual minimum number required.	Calculate the minimum number of units according to a), b) and c) and enter it in a table. Take the highest value as the minimum quantity. Type a) b) c) GA-9/60 6 6 6 ➡ 6
Definitive number of units Choose the final solution from the remaining possibilities, depending on the geometry of the hall and the costs.	Select 6 GA-9/60 units.
Proportion of fresh air From the air flow output of the selected units (see Table D4) and the required minimum fresh air volume, calculate the minimum proportion of fresh air.	Total air flow rate: 6 x 6 800 m³/h = 40 800 m³/h Minimum fresh air volume: 8 000 m³/h Minimum fresh air proportion: 20 %

D

5 Options

TopVent® commercial GA can be adapted to the requirements of a specific project thanks to a range of optional equipment. You will find a detailed description of all optional components in Part G 'Options' of this handbook.

Option	Use
Paint finish	in the Hoval standard colour red or in any colour required
Acoustic cowl	to reduce noise levels in the room (reduced noise radiation from Air-injector)

Table D11: Availability of options for TopVent® commercial GA

6 Control systems

TopVent® commercial GA units are controlled by TempTronic RC. This programmable control unit, developed especially for TopVent® units, offers the following advantages:

- Regulation of the room temperature
- Control of air distribution by means of the Hoval Air-Injector
- 3 set point values can be set (Room temperature day, Room temperature night and Frost protection temperature)
- Control of operating modes according to week programme and calendar
- Registration of unit malfunctions in an alarm list
- Password protection for user and service personnel
- Menu-guided operation via a 4-line display
- Integrated room temperature sensor

You will find a detailed description of TempTronic in Part H 'Control systems' of this handbook.

Notice
In systems for heating high spaces in which TopVent® commercial GA units are used together with RoofVent® fresh air handling units, Hoval DigiNet takes over all control and regulation functions.

7 Transport and installation

7.1 Installation

Caution
Risk of injury from incorrect handling. Have transport and assembly work carried out by trained specialists!

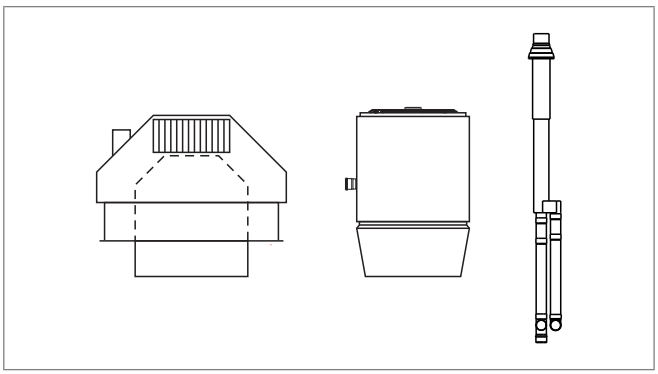

Fig. D3: TopVent® commercial GA is delivered in two parts and includes a flue gas kit.

The TopVent® commercial GA unit is a complete appliance with a roof frame and a roof hood. It is delivered in two parts and includes a flue gas kit. The following guidelines are important when preparing for assembly:

- The units are assembled from roof level. A crane or helicopter is required.
- To transport the unit to the roof, 2 hoisting slings are required (approx. length 6 m). If steel cables or chains are used, the unit corners must be properly protected.
- The roof support for the roof frame must be flat and level.
- Provide for a roof opening of 1120 x 1700 mm.
- Secure the unit only on roofs of fireproof materials and with a sufficient load-bearing capacity.
- Do not install any additional loads.
- The TopVent® unit must be installed horizontally.
- Follow the assembly instructions included.

7.2 Installation of the flue gas evacuation and the combustion air supply

Observe national / local regulations when planning the flue gas evacuation and the combustion air supply. From an early stage, coordinate the installation with the responsible district chimney sweep authorities and obtain the necessary authorisation from the local building authority.

7.3 Gas connection

Caution
Risk of injury from incorrect handling. The gas connection may only be carried out by specialists authorised by the gas supply company!

Please note the following:
- The fuel used is natural gas. Check the type of gas the unit is set to work with and, if necessary, have Hoval Customer Service reset the unit to the type of gas supplied locally.
- During operation of the unit, the required quantity of gas and the necessary pressure of gas must be present constantly.
- Connect the gas supply line with appropriate bolted joints which can be loosened, tension-free and vibration-free.
- The connection of the unit to the gas supply line must be gas-tight.
- Ensure that a gas pressure regulator and a cut-off-valve (not part of the scope of supply) are installed directly before the unit.

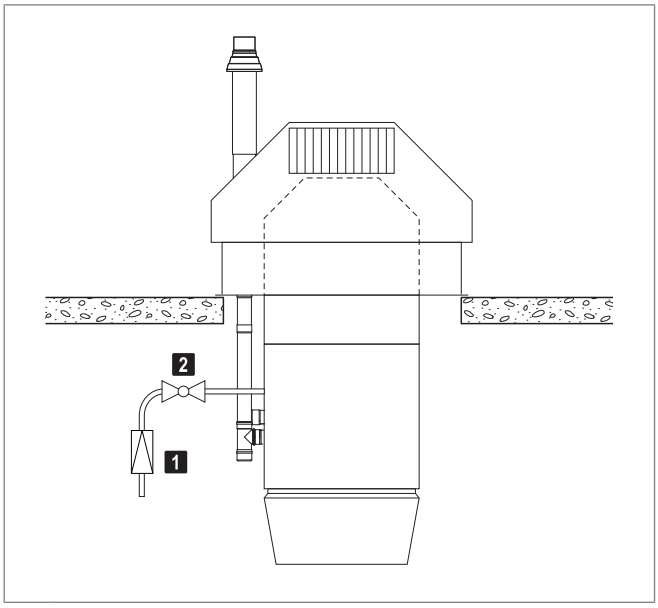

1 Gas pressure regulator (20…50 mbar)
Recommended settings:
– Natural gas .. 20 mbar
– Liquid gas .... 30 mbar

2 Cut-off-valve

Fig. D4: Gas pressure regulator and cut-off-valve in the gas supply line

7.4 Electrical installation

Caution
Danger from electric current. The electrical installation is to be carried out only by a qualified electrician!

- Observe all relevant regulations (e.g. EN 60204-1).
- Check whether the local operating voltage, frequency and fuse protection match the data on the type plate. If there are any discrepancies, the unit must not be connected!
- Cable cross-sections must be selected according to technical regulations, e. g. VDE 0100.
- Electrical installation to be carried out according to wiring diagram.
- Do not forget the master switch for the complete installation.

A TempTronic can control up to 8 TopVent® units simultaneously:
- Connect TempTronic and the units to each other via a system bus.
- Assign a number to each unit:
  – micro switch S1 on the power module
  – micro switch S2 on the burner control

D

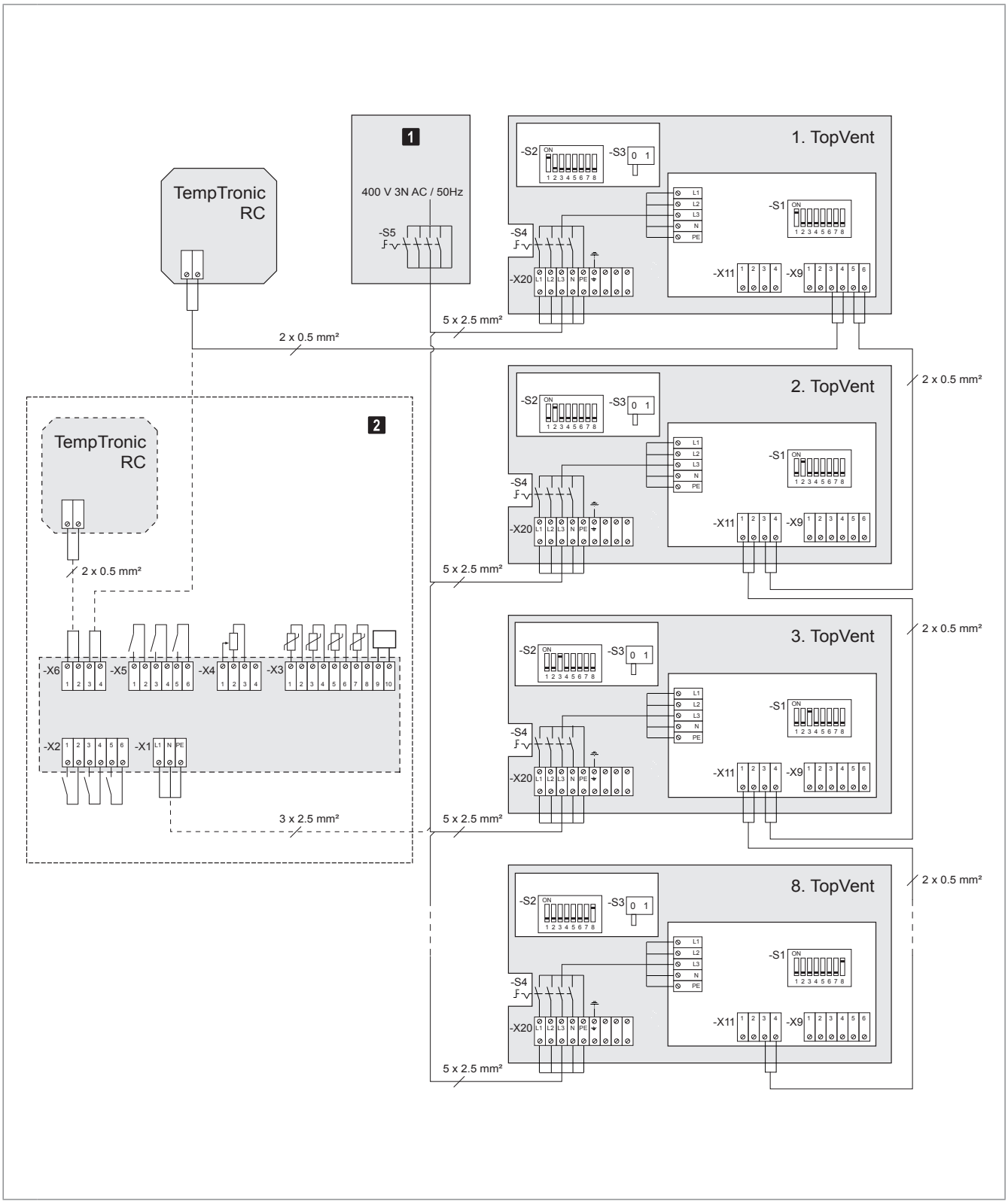

1 Control panel (on site)

2 Variant: connection for TempTronic RC and options module

Fig. D5: Connection diagram

8 Specification texts

8.1 TopVent® commercial GA – Gas-fired roof-mounted unit for ventilating and heating high spaces

Corrosion-resistant Aluzinc sheet metal housing with inspection door.
Gas-fired heat exchanger of premium-quality stainless steel, fully-automatic premix burner for low-emission burning of natural gas.
Fan unit consisting of a 2-speed, three-phase external rotor motor with pressure-resistant aluminium sickle-shaped blades, maintenance-free and quiet, with a high degree of efficiency. Motor protection through built-in thermal contacts.
Mounted on side of the housing, a terminal box for the connection of the supply voltage and accessories.
Vortex air distributor with concentric outlet nozzle, 12 adjustable vanes and integrated sound attenuation cowl, incl. actuator
Mounted on roof frame of galvanized sheet steel, painted black, with 4 transportation straps.
Aluzinc sheet metal roof hood insulated on inside, with 2 weather grilles and an inspection door. 2 Class G4 fresh air filters with filter pressure switch.
Aluzinc sheet metal mixed air box, insulated on inside, with fresh air damper and recirculation air damper linked to move in opposite directions; includes actuator.
Flue gas accessories for room-air-independent installation (flue gas evacuation and combustion air supply).

Technical data

Fan speed	1	2	
Nominal air flow rate (at 20 °C)	_____	_____	m³/h
Floor area reached	_____	_____	m²
Mounting height	_____	_____	m
Nominal heat output	_____	_____	kW
Power consumption	_____	_____	kW
Current consumption	_____	_____	A
Supply voltage	400 V 3N AC		
Frequency	50 Hz		
Protection rating	IP 20		
Gas category	_____		
Gas appliance type	C_{33}		
Gas supply pressure	_____		
Gas connection	_____		
Combustion air connection	DN ___		
Flue gas connection	DN ___		

GA-9/60

8.2 Options

Standard paint finish SL
in the Hoval standard colour red (RAL 3000)

Paint finish as desired AL
in RAL colour No. _____

Acoustic cowl AHD
Insertion attenuation 4 dB

8.3 Control systems

TempTronic RC programmable regulation system with menu guided operation for fully automated operation of TopVent® units:

- TempTronic RC
- Option module OM
- Room temperature average value MRT4
- External room temperature sensor RF

D

Hoval

TopVent® MG

Gas-fired supply air handling unit for ventilating and heating high spaces

E

1 Use _____ 56

2 Construction and operation _____ 56

3 Technical data _____ 60

4 Design example _____ 66

5 Options _____ 67

6 Control systems _____ 67

7 Transport and installation _____ 68

8 Specification texts _____ 71

1 Use

1.1 Intended use

TopVent® MG units are used for the heating of high spaces, operating with fresh air, mixed air or recirculating air.
Also included under intended use are compliance with the installation, commissioning, operating and maintenance provisions (operating instructions).
Any use beyond this is considered improper. The manufacturer shall not be held responsible for any damage resulting from such use.

1.2 User group

TopVent® MG units may only be installed, operated and maintained by authorised and instructed personnel who are well acquainted with the units and are informed about possible dangers.
The operating instructions are for English-speaking operating engineers and technicians as well as specialists in building, heating and air technology.

1.3 Hazards

TopVent® MG units are state-of-the-art and safe to operate. However, despite all precautionary measures taken, there are still some potential hazards which are not immediately obvious, such as:

- Dangers when working with the electrical system
- Dangers when working with components of the gas circuit
- When working on the unit, objects (e.g. tools) could be dropped.
- Malfunctions as a result of defective parts
- Danger caused by coming in contact with hot components when carrying out work inside the unit or on the flue gas system

2 Construction and operation

TopVent® MG was especially developed for use in high spaces. It fulfills the following functions:

- Heating (with gas-fired heat exchanger)
- Fresh air supply
- Mixed air operation
- Recirculation
- Air distribution via Air-Injector
- Air filtration

The unit is installed under the ceiling and connected to a fresh air duct. According to the position of the dampers, it draws in fresh air and/or interior air, filters it, heats it in the gas-fired heat exchanger and injects it into the interior through the Air-Injector.
Thanks to its high performance and efficient air distribution the TopVent® MG covers a large area. Therefore, compared to other systems, fewer units are needed to achieve the required conditions.
2 different unit sizes and diverse output levels, as well as a broad range of accessories make possible solutions tailored to the requirements of each individual hall.

2.1 Unit construction

TopVent® MG consists of the following components:

- Mixed air box
- Filter box
- Heating section
- Air-Injector

The components are bolted together, but can be dismantled separately again.

2.2 Air distribution with the Air-Injector

The patented air distributor – called the Air-Injector – is the core element. The air discharge angle is set by means of the adjustable guide vanes. It depends on the air flow rate, the mounting height and the temperature difference between the supply air and room air. The air is therefore blown into the room vertically downward, conically or horizontally. This ensures that:

- with each unit a large area of the hall can be covered,
- the occupied area is draught-free,
- the temperature stratification in the room is reduced, thus saving energy.

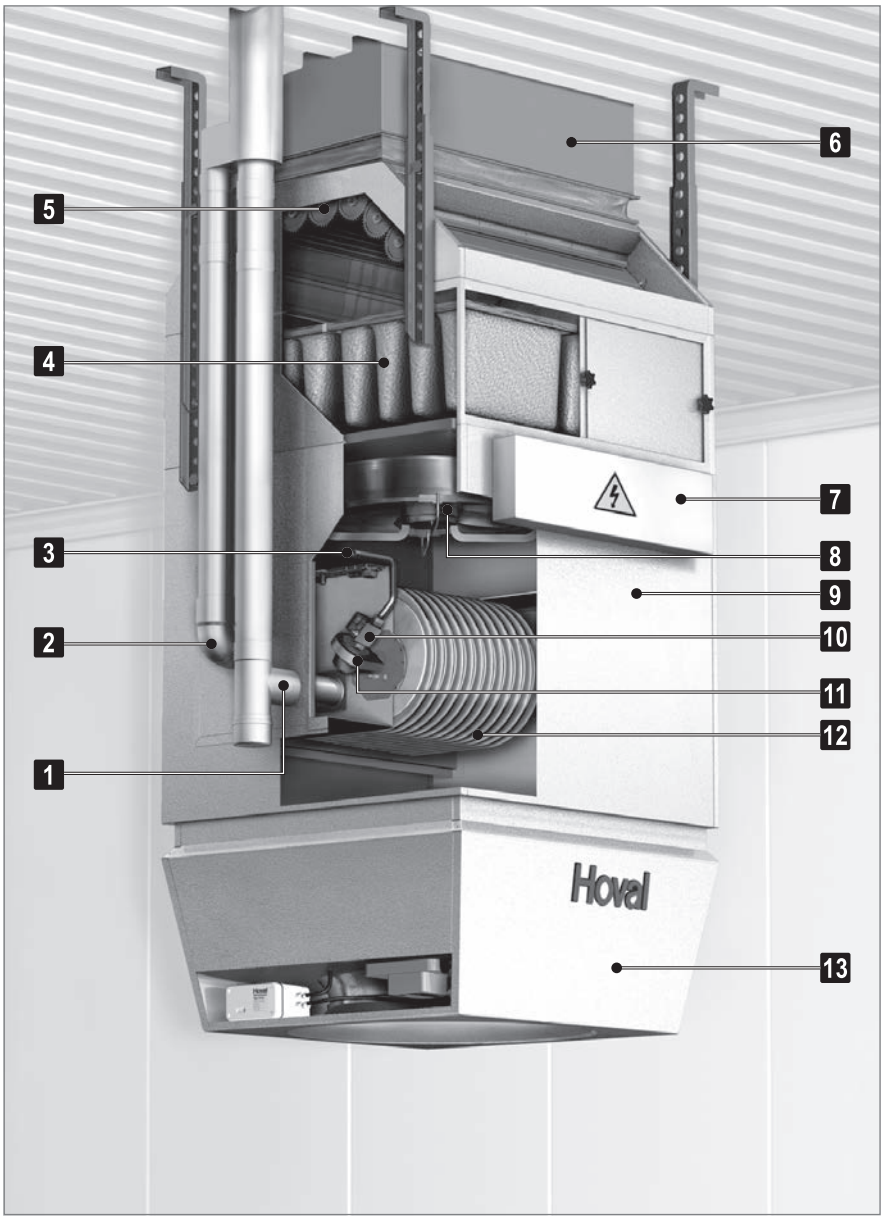

1	**Flue gas connection**
2	**Combustion air connection**
3	**Gas connection**
4	**Filter box:** with 2 class G4 bag air filters and filter pressure switch, insulated on the inside
5	**Mixed air box:** with fresh air damper and recirculation air damper linked to move in opposite directions, and actuator, insulated inside
6	**Fresh air duct** with canvas connection (not included in Hoval delivery specifications)
7	**Terminal box with isolation switch**
8	**Fan:** maintenance-free and low-noise
9	**Housing:** of corrosion-resistant Aluzinc sheet metal
10	**Gas control valve**
11	**Burner unit:** consisting of stainless steel gas blower and premix burner
12	**Heat exchanger:** of stainless steel
13	**Air-Injector:** patented, automatically adjustable vortex air distributor for draught-free air distribution over a large area (incl. actuator)

Fig. E1: TopVent® MG structure

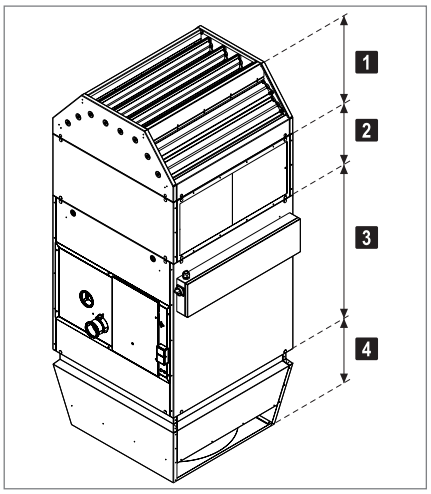

1	Mixed air box
2	Filter box
3	Heating section
4	Air-Injector

Fig. E2: TopVent® MG components

E

2.3 Operating modes

TopVent® MG operates in the following modes:

- Off
- Supply air speed 2
- Supply air speed 1
- Recirculation
- Recirculation night
- Recirculation speed 1

TempTronic regulates these modes of operation automatically.

Code	Operating mode	Use	Layout	
OFF	**Off** The fan is switched off. Frost protection for the room remains active. There is no room temperature control.	if the unit is not needed	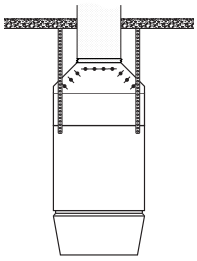	Fan ..... off Fresh air damper..... closed Heater..... off
SA2	**Supply air speed 2** The TopVent® unit blows fresh air into the room. A fixed proportion of fresh air is set. The heating is regulated according to heating requirements. The room temperature set value day is active. The unit operates at speed 2 (high air flow rate).	during room use	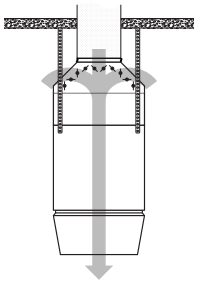	Fan ..... Speed 2 Fresh air damper..... 20 % open [1] Heater..... 60…100 % [2] [1] percentage is adjustable [2] for heat demand
SA1	**Supply air speed 1** the same as SA2, but the unit operates only at fan speed 1 (low air flow rate)	during room use	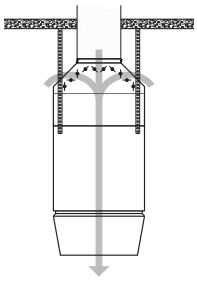	Fan ..... Speed 1 Fresh air damper..... 20 % open [1] Heater..... 60…100 % [2] [1] percentage is adjustable [2] for heat demand
REC	**Recirculation** On/off-operation: if heating is required, the unit draws in room air, heats it and returns the warm air back into the room. The room temperature set value day is active.	For pre-heating	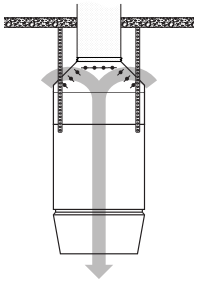	Fan ..... Speed 1 / 2 [1] Fresh air damper..... closed Heater..... 60…100 % [1] for heat demand
RECN	**Recirculation night** like REC, but with room temperature set value night	during the night and on weekends		

REC1	**Recirculation speed 1** the same as REC, but the unit operates only at fan speed 1 (low air flow rate) This operating mode is only available for unit size 9.	For special cases	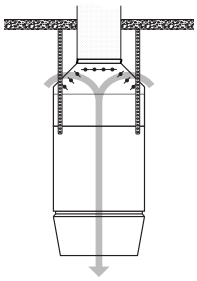	Fan ..... Speed 1 [1)] Fresh air damper..... closed Heater..... 60…100 % [1)] for heat demand

Table E1: TopVent® MG operating modes

Notice
There is only one fan speed for TopVent® units size 6/60. Hence these units operate only at fan speed 2 in the operating modes REC and RECN. The operating modes SA1 and REC1 are not available.

E

3 Technical data

3.1 Unit type reference

MG - 6 / 30 / ...

Unit type
TopVent® MG

Unit size
6 or 9

Output in kW
30 or 60

Options

Table E2: Unit type reference

3.2 Application limits

Ambient temperature	min.	°C	-15
	max.	°C	35
Supply air temperature	max.	°C	60

The units cannot be used in:
- areas where there is danger of explosion
- places with a corrosive or aggressive environment
- damp locations
- spaces with a large amount of dust

Table E3: TopVent® MG limits of operation

3.3 Air flow rate, gas consumption

Unit type			MG-6/30		MG-6/60	MG-9/60	
Fan speed			**1**	**2**	**2**	**1**	**2**
Fan speed		min^{-1}	720	900	900	910	1280
Nominal air flow rate [1]		m³/h	3125	4200	4275	5340	6980
Floor area reached [2]		m²	256	342	342	462	676
Nominal heat input	max.	kW		32.0	66.0		66.0
Nominal heat output	max.	kW		29.2	60.5		60.5
Combustion efficiency [3]		%		min. 91	min. 91		min. 91
Gas consumption							
I_{2ELL}, I_{2ELw}, I_{2H}, I_{2E}, I_{2Esi}, $I_{2E(S)B}$, I_{2Er} (G20) H_i = 9.45 kWh/m³ with 20 / 25 mbar gas supply pressure		m³/h		3.4	7.0		7.0
I_{2ELL} (G25) H_i = 8.125 kWh/m³ with 20 mbar gas supply pressure		m³/h		3.9	8.1		8.1
I_{2L}, I_{2Esi}, $I_{2E(R)B}$, I_{2Er} (G25) H_i = 8.38 kWh/m³ with 25 mbar gas supply pressure		m³/h		3.8	7.9		7.9

1) at an air temperature of 20 °C
2) Mounting height H_{max} = 11 m for a temperature difference between supply air and room air of up to 30 K
3) in accordance with EN 1020

Table E4: TopVent® MG technical data

3.4 Electrical connections

Unit type		MG-6/30	MG -6/60	MG -9/60
Supply voltage	V AC	400 3N	400 3N	400 3N
Permitted voltage tolerance	%	+10 / -15	+10 / -15	+10 / -15
Frequency	Hz	50	50	50
Power consumption	W	660	660	1080
Current consumption	A	1.69	1.69	2.65
Protection rating	–	IP 20	IP 20	IP 20

Table E5: TopVent® MG electrical connections

3.5 Gas connection

Unit type	MG-6/30	MG-6/60	MG-9/60
Gas category: natural gas	I_{2ELL}, I_{2ELw}, I_{2L}, I_{2H}, I_{2E}, I_{2Esi}, $I_{2E(S)B}$, $I_{2E(R)B}$, I_{2Er}		
Gas appliance type [1)]	B_{23}, C_{13}, C_{33}		
Gas connection	Rp ½"	R ¾"	R ¾"
Combustion air connection	DN 80	DN 100	DN 100
Flue gas connection	DN 80	DN 100	DN 100
Max. length of flue gas duct [2)]	4 m	6 m	6 m
Max. length of flue gas duct if insulated [2)]	8 m	10 m	10 m

[1)] according to method of flue gas evacuation and combustion air supply
[2)] Equivalent length of formed parts:
– 90° elbow.....2 m
– 45° elbow .....1 m
– 90° T-piece ....2 m

Table E6: TopVent® MG gas circuit connections

E

3.6 Sound levels

Unit type			MG-6/30		MG-6/60	MG-9/60	
Fan speed			**1**	**2**	**2**	**1**	**2**
Sound pressure level (at a distance of 5 m) [1]		dB(A)	46	53	53	49	55
Total sound power level		dB(A)	68	75	75	71	77
Octave sound power level	63 Hz	dB	71	79	79	77	82
	125 Hz	dB	68	75	75	73	81
	250 Hz	dB	71	77	76	73	79
	500 Hz	dB	65	73	72	70	74
	1000 Hz	dB	62	70	70	66	72
	2000 Hz	dB	58	67	66	61	68
	4000 Hz	dB	51	61	60	55	62
	8000 Hz	dB	47	55	55	50	57

[1] with a hemispherical radiation pattern in a low-reflection room

Table E7: TopVent® MG sound power levels

3.7 Heat output

Air entry temp. [1]		10 °C			15 °C			20 °C		
	Fan	Q	t_S	H_{max}	Q	t_S	H_{max}	Q	t_S	H_{max}
Unit type	**speed**	**kW**	**°C**	**m**	**kW**	**°C**	**m**	**kW**	**°C**	**m**
MG-6/30	2	29.2	26.9	10.0	29.2	30.9	10.3	29.2	34.9	10.7
MG-6/60	2	60.5	48.5	7.0	60.5	52.5	7.2	60.5	56.5	7.3
MG-9/60	1	60.5	40.0	7.0	60.5	44.0	7.2	60.5	48.0	7.4
	2	60.5	32.0	10.2	60.5	36.0	10.5	60.5	40.0	10.8

Legend:
Q = Nominal heat output
t_S = Maximum supply air temperature
H_{max} = Maximum mounting height

[1] The entry air temperature (10 / 15 / 20 °C) corresponds to the room temperature. The heating outputs given refer to a fresh air proportion of 20 % (at -10 °C); i.e. the mixed air temperatures before the heating coil are 6 / 10 / 15 °C.

Table E8: TopVent® MG heat output, supply air temperatures and mounting height

3.8 Minimum and maximum distances

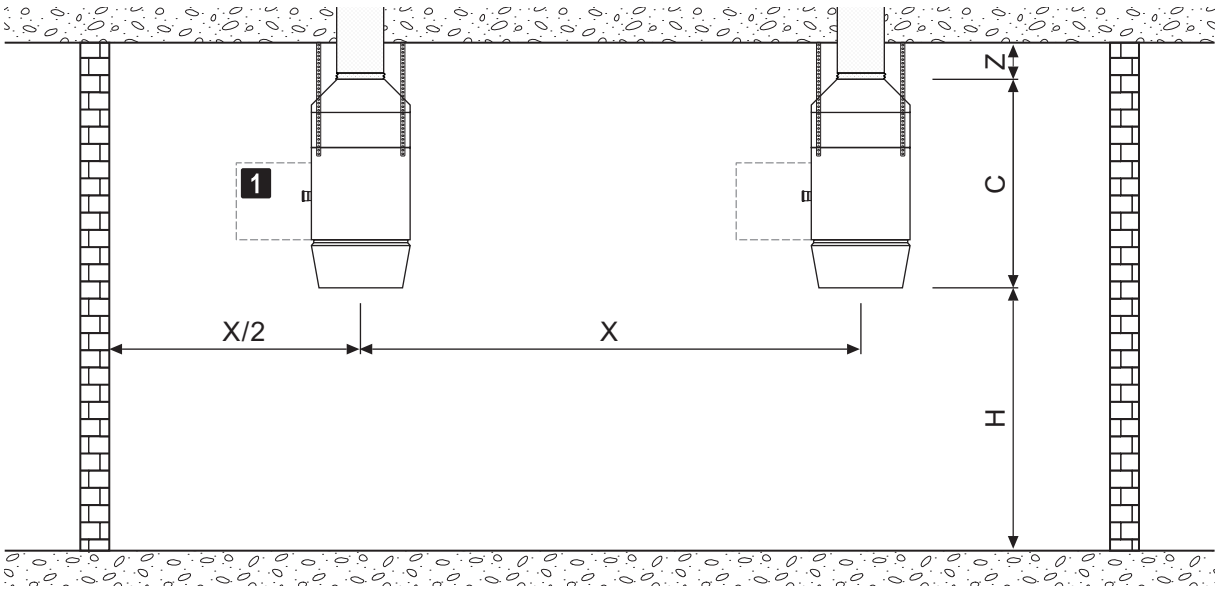

Unit type			MG-6		MG-9	
Fan speed			**1**	**2**	**1**	**2**
Height of unit C		mm	2245	2245	2330	2330
Unit clearance X	min.	m	9.0	10.0	11.0	12.5
	max.	m	16.0	18.5	21.5	26.0
Mounting height H	min.	m	4.0	4.0	5.0	5.0
Distance from ceiling Z	min.	m	0.3	0.3	0.4	0.4

1 Allow a free space of 1.5 m for service and maintenance.

Table E9: Minimum and maximum distances

E

3.9 Dimensions and weight

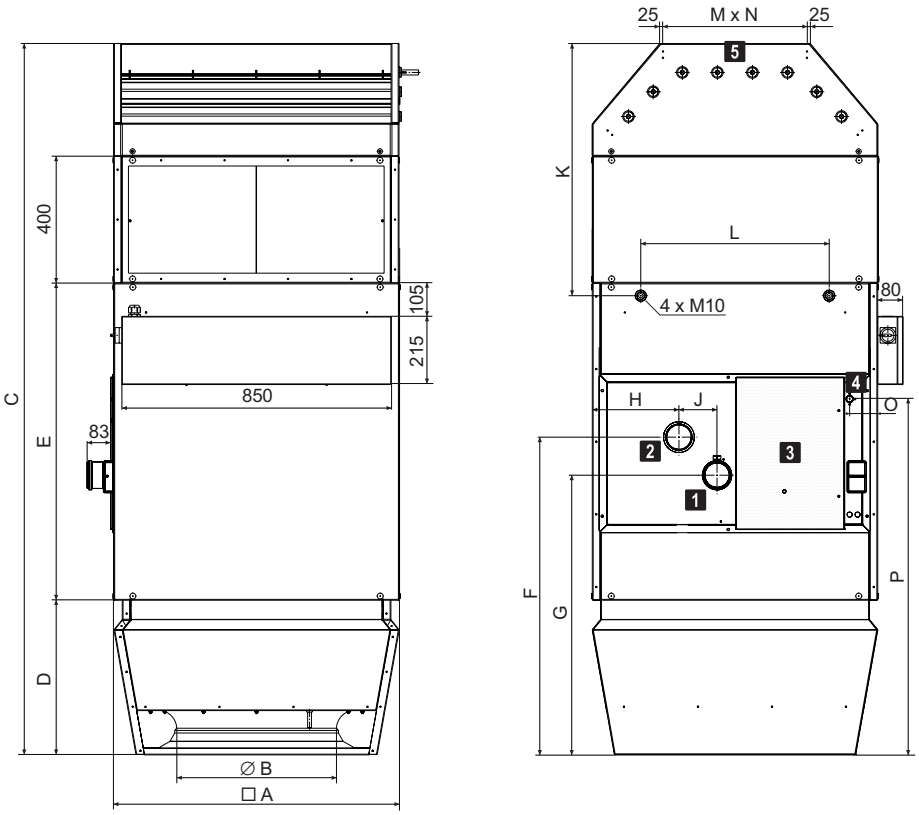

Unit type		MG-6/30	MG-6/60	MG-9/60
A	mm	900	900	1100
B	mm	500	500	630
C	mm	2245	2245	2330
D	mm	490	490	570
E	mm	1000	1000	1000
F	mm	946	974	1048
G	mm	836	834	908
H	mm	258	237	338
J	mm	110	140	140
K	mm	795	795	800
L	mm	594	594	846
M x N	mm	420 x 850	420 x 850	500 x 1050
O	mm	87	73	172
P	mm	1057	1128	1203
Weight	kg	175	185	230

1	Flue gas connection with measuring opening
2	Combustion air connection
3	Inspection door with measuring opening for combustion air temperature
4	Gas connection
5	Connection for fresh air duct

Table E10: TopVent® MG dimensions and weights

3.10 Air flow rate with additional pressure drops

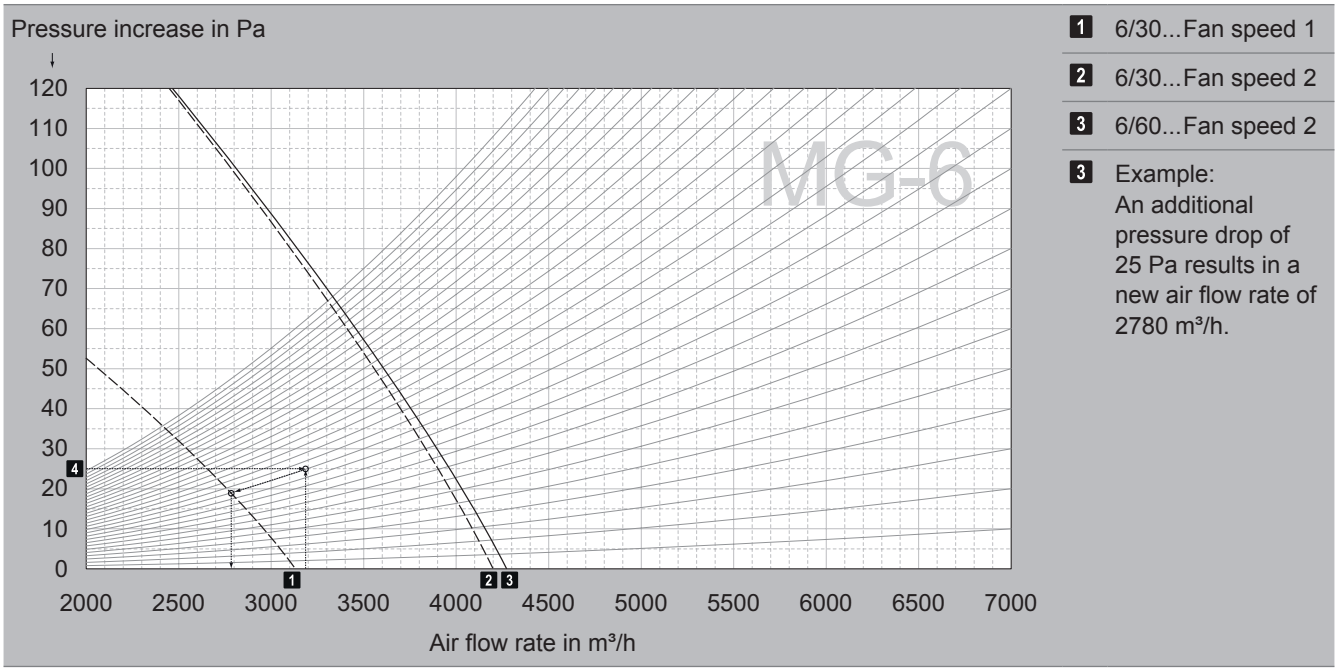

Diagram E1: TopVent® MG-6 air flow rate for additional pressure drop

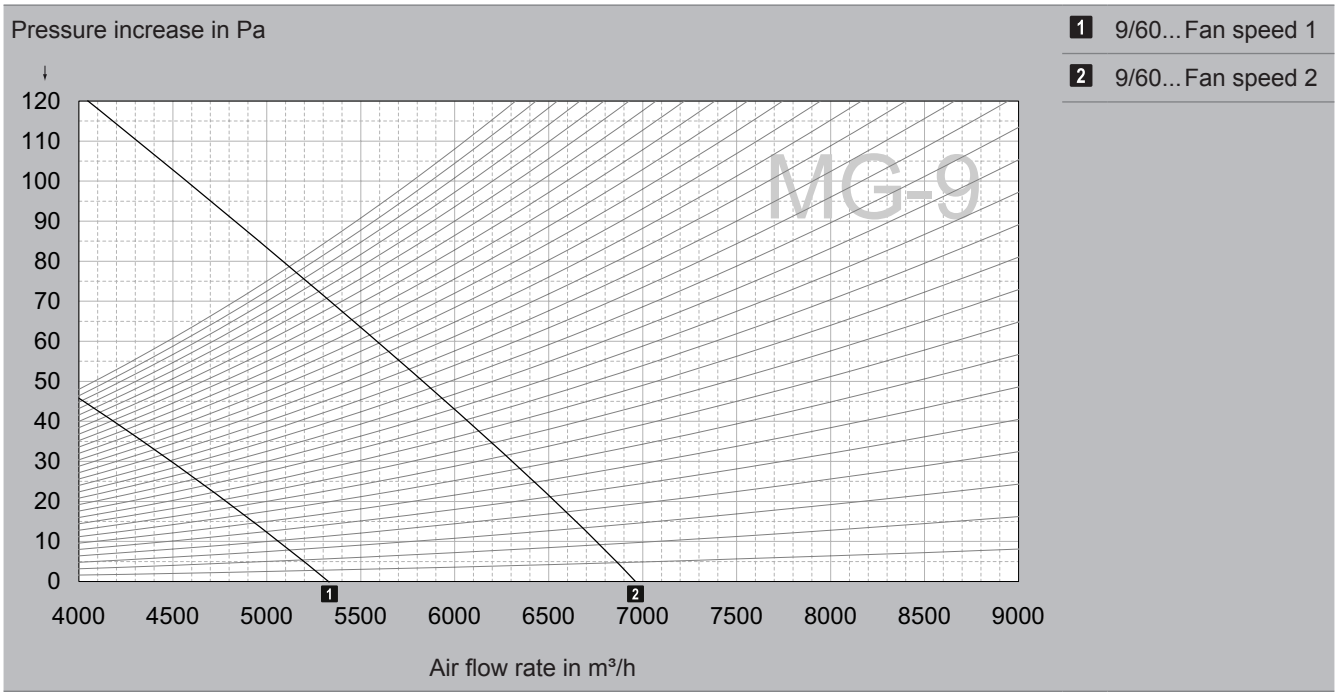

Diagram E2: TopVent® MG-9 air flow rate for additional pressure drop

E

4 Design example

Input data ■ Geometry of the room (plan) ■ Mounting height (= distance between floor and lower edge of the TopVent® unit) ■ Heating load ■ Desired room temperature ■ Comfort requirements (acoustic) ■ Fresh air temperature ■ Minimum fresh air volume (the fresh air proportion can be adjusted from 0 % to 100 %, however, for energy economy it should be kept to a minimum under design conditions).	**Example** Dimensions..... 50 x 70 m Mounting height..... 10 m Heating load ..... 350 kW Room temperature..... 20 °C Comfort requirements..... Standard Fresh air temperature..... -10 °C Minimum fresh air volume ..... 8 000 m³/h
Comfort requirements Define the fan speed in accordance with the acoustic requirements: ■ Low noise level → fan speed 1 ■ Normal noise level → fan speed 2	Standard → fan speed 2
Mounting height ■ With the minimum mounting height (Table E9) check which units can be used. ■ With the maximum mounting height (Table E8) check which units can be used. ■ Strike units which are not adequate.	MG-6/30 ✓ ~~MG-6/60~~ MG-9/60 ✓
Minimum number a) Minimum number based on surface In Table E4 the maximum floor area which can be covered by TopVent® commercial GA can be seen. For a known surface it is then possible to calculate the minimum number of units required. b) Minimum number based on length x width Depending on the shape of the hall and in relation to its length and width, a certain number of units will be required. This can be calculated from the maximum distances between the units and between them and the wall (Table E9). c) Minimum number based on heat load Depending on the total heat output required, a minimum number of units can be calculated for each unit size (see Table E8). The highest number from results a), b) and c) is the actual minimum number required.	Calculate the minimum number of units according to a), b) and c) and enter it in a table for each type of unit. Take the highest value as the minimum quantity. Type / a) / b) / c) / → MG-6/30 / 11 / 12 / 12 / → 12 MG-9/60 / 6 / 6 / 6 / → 6
Definitive number of units Choose the final solution from the remaining possibilities, depending on the geometry of the hall and the costs.	6 units MG-9/60
Proportion of fresh air From the air flow output of the selected units (see Table E4) and the required minimum fresh air volume, calculate the minimum proportion of fresh air.	Total air flow rate: 6 x 6 980 m³/h = 41 880 m³/h Minimum fresh air volume: 8 000 m³/h Minimum fresh air proportion: 20 %

5 Options

TopVent® MG can be adapted to the requirements of a specific project thanks to a range of optional equipment. You will find a detailed description of all optional components in Part G 'Options' of this handbook.

Option	Use
Flue gas accessories	for simple installation independently of room air
Paint finish	in the Hoval standard colour red or in any colour required
Suspension set	for mounting the unit on ceiling
Acoustic cowl	to reduce noise levels in the room (reduced noise radiation from Air-injector)

Table E11: Availability of options for TopVent® MG

6 Control systems

TopVent® MG units are controlled by TempTronic RC. This programmable control unit, developed especially for TopVent® units, offers the following advantages:

- Regulation of the room temperature
- Control of air distribution by means of the Hoval Air-Injector
- 3 set point values can be set (Room temperature day, Room temperature night and Frost protection temperature)
- Control of operating modes according to week programme and calendar
- Registration of unit malfunctions in an alarm list
- Password protection for user and service personnel
- Menu-guided operation via a 4-line display
- Integrated room temperature sensor

You will find a detailed description of TempTronic in Part H 'Control systems' of this handbook.

Notice
In indoor climate systems in which TopVent® MG units are used together with RoofVent® fresh air handling units, Hoval DigiNet takes over all control and regulation functions.

E

7 Transport and installation

7.1 Installation

Caution
Risk of injury from incorrect handling. Have transport and assembly work carried out by trained specialists!

For the purposes of installation the units are provided with four M10 rivet nuts with hexagon bolts and washers. The following guidelines are important when preparing for assembly:

- Attach the TopVent® unit using a suspension set (option) or by means of steel flat, slotted steel flat, angles, steel cables, etc.
- Secure the unit only to ceilings of fireproof materials and with sufficient load-bearing capacity.
- Do not use eyebolts.
- Do not install any additional loads.
- The TopVent® unit must be installed horizontally.
- Non-vertical suspensions are permissible up to a maximum angle of 45°.
- Provide for a fresh air duct.

7.2 Installation of the flue gas evacuation and the combustion air supply

Caution
Risk of injury from incorrect handling. Installation of the flue gas evacuation and the combustion air supply may only be carried out by specialists!

Observe national / local regulations when planning the flue gas evacuation and the combustion air supply. From an early stage, coordinate the installation with the responsible district chimney sweep authorities and obtain the necessary authorisation from the local building authority.
Please note the following:

- The units can be installed as room-air-dependent (Type B_{23}) or room-air-independent (Type C_{13}, C_{33}) appliances.
- If the unit is room-air-independent, equip it with the optional flue gas kit.
- For room-air-dependent operation the combustion air is taken directly from the room in which the unit is installed. Ensure the room is sufficiently ventilated and that the combustion air is free from pollutants and aggressive substances (halogens such as chlorides, fluorides, etc.).
- Observe the maximum lengths given in Table E6 (see chapter 3 'Technical data').

7.3 Gas connection

Caution
Risk of injury from incorrect handling. The gas connection may only be carried out by specialists authorised by the gas supply company!

Please note the following:

- The fuel used is natural gas. Check the type of gas the unit is set to work with and, if necessary, have Hoval Customer Service reset the unit to the type of gas supplied locally.
- During operation of the unit, the required quantity of gas and the necessary pressure of gas must be present constantly.
- Connect the gas supply line with appropriate bolted joints which can be loosened, tension-free and vibration-free.
- The connection of the unit to the gas supply line must be gas-tight.
- Ensure that a gas pressure regulator and a cut-off-valve (not part of the scope of supply) are installed directly before the unit.

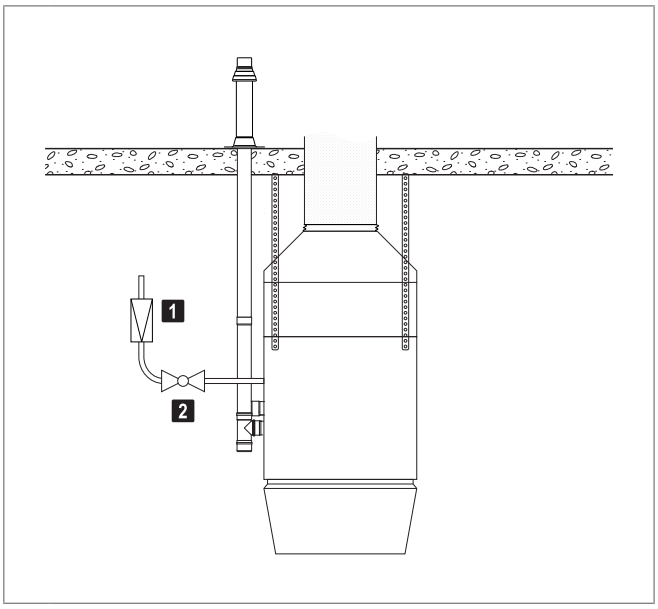

1 Gas pressure regulator (20…50 mbar)
Recommended settings:
– Natural gas .. 20 mbar
– Liquid gas .... 30 mbar

2 Cut-off-valve

Fig. E3: Gas pressure regulator and cut-off-valve in the gas supply line

7.4 Electrical installation

Caution
Danger from electric current. The electrical installation is to be carried out only by a qualified electrician!

- Observe all relevant regulations (e.g. EN 60204-1).
- Check whether the local operating voltage, frequency and fuse protection match the data on the type plate. If there are any discrepancies, the unit must not be connected!
- Cable cross-sections must be selected according to technical regulations, e. g. VDE 0100.
- Electrical installation to be carried out according to wiring diagram.
- Do not forget the master switch for the complete installation.

A TempTronic can control up to 8 TopVent® units simultaneously:
- Connect TempTronic and the units to each other via a system bus.
- Assign a number to each unit:
  – micro switch S1 on the power module
  – micro switch S2 on the burner control

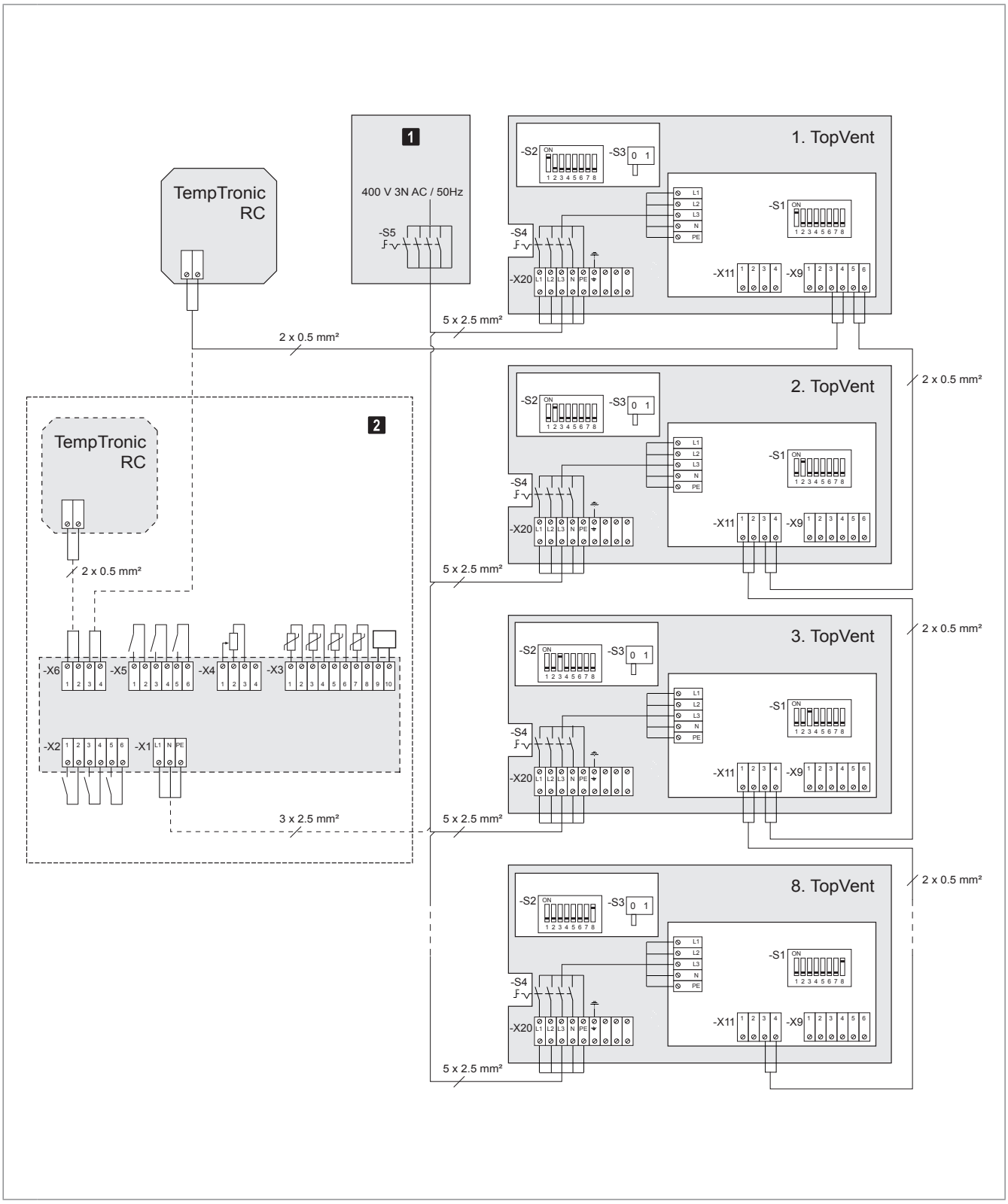

1 Control panel (on site)

2 Variant: connection for TempTronic RC and options module

Fig. E4: Connection diagram

8 Specification texts

8.1 TopVent® MG – Gas-fired supply air unit for ventilating and heating high spaces

Corrosion-resistant Aluzinc sheet metal housing with access panel and four M10 rivet nuts for installation of the optional suspension set for ceiling mounting.
Gas-fired heat exchanger of premium-quality stainless steel, fully-automatic premix burner for low-emission burning of natural gas.
Fan unit consisting of a 2-speed, three-phase external rotor motor with pressure-resistant aluminium sickle-shaped blades, maintenance-free and quiet, with a high degree of efficiency. Motor protection through built-in thermal contacts.
Mounted on side of the housing, a terminal box for the connection of the supply voltage and accessories.
Vortex air distributor with concentric outlet nozzle, 12 adjustable vanes and integrated sound attenuation cowl, incl. actuator
Filter box insulated on the inside, with 2 class G4 bag air filters with filter pressure switch.
Aluzinc sheet metal mixed air box, insulated on inside, with fresh air damper and recirculation air damper linked to move in opposite directions; includes actuator.

Technical data

Fan speed	1	2	
Nominal air flow rate (at 20 °C)	_____	_____	m³/h
Floor area reached	_____	_____	m²
Mounting height	_____	_____	m
Nominal heat output	_____	_____	kW
Power consumption	_____	_____	kW
Current consumption	_____	_____	A
Supply voltage	400 V 3N AC		
Frequency	50 Hz		
Protection rating	IP 20		
Gas category	_____		
Gas appliance type	_____		
Gas supply pressure	_____		
Gas connection	_____		
Combustion air connection	DN ___		
Flue gas connection	DN ___		

MG-6/30
MG-6/60
MG-9/60

8.2 Options

Flue gas kit AZF / AZS / AZW
for room-air-independent installation (flue gas evacuation and combustion air supply)

Individual components of flue gas accessories
for the adaptation of the flue gas kit to local conditions

Standard paint finish SL
in the Hoval standard colour red (RAL 3000)

Paint finish as desired AL
in RAL colour No. _____

Suspension set AHS
for mounting the unit on ceiling, exterior paint finish matching the unit

Acoustic cowl AHD
Insertion attenuation 4 dB

8.3 Control systems

TempTronic RC programmable regulation system with menu guided operation for fully automated operation of TopVent® units:

- TempTronic RC
- Option module OM
- Room temperature average value MRT4
- External room temperature sensor RF

E

Hoval

TopVent® GV

Gas-fired air recirculation unit for heating low-ceiling spaces

F

1 Use ____ 74

2 Construction and operation ____ 74

3 Technical data ____ 76

4 Design example ____ 82

5 Options ____ 84

6 Control systems ____ 84

7 Transport and installation ____ 85

8 Specification texts ____ 88

1 Use

1.1 Intended use

TopVent® GV units are used for the heating of low spaces, operating with air recirculation.
Also included under intended use are compliance with the installation, commissioning, operating and maintenance provisions (operating instructions).
Any use beyond this is considered improper. The manufacturer shall not be held responsible for any damage resulting from such use.

1.2 User group

TopVent® GV units may only be installed, operated and maintained by authorised and instructed personnel who are well acquainted with the units and are informed about possible dangers.
The operating instructions are for English-speaking operating engineers and technicians as well as specialists in building, heating and air technology.

1.3 Hazards

TopVent® GV units are state-of-the-art and are safe to operate. However, despite all precautionary measures taken, there are still some potential hazards which are not immediately obvious, such as:

- Dangers when working with the electrical system
- Dangers when working with components of the gas circuit
- When working on the unit, objects (e.g. tools) could be dropped.
- Malfunctions as a result of defective parts
- Danger caused by coming in contact with hot components when carrying out work inside the unit or on the flue gas system

2 Construction and operation

TopVent® GV was developed for cost-efficient heating of low-ceiling spaces. It fulfills the following functions:

- Heating (with gas-fired heat exchanger)
- Recirculation
- Air distribution via air outlet louvre

The unit is mounted under the ceiling or on a wall and draws in room air. The air is heated in a gas-fired heat exchanger and injected back into the interior through the air outlet louvre.
There are 2 different appliance sizes in 3 output levels, so that a total of 6 different heat output levels are available.

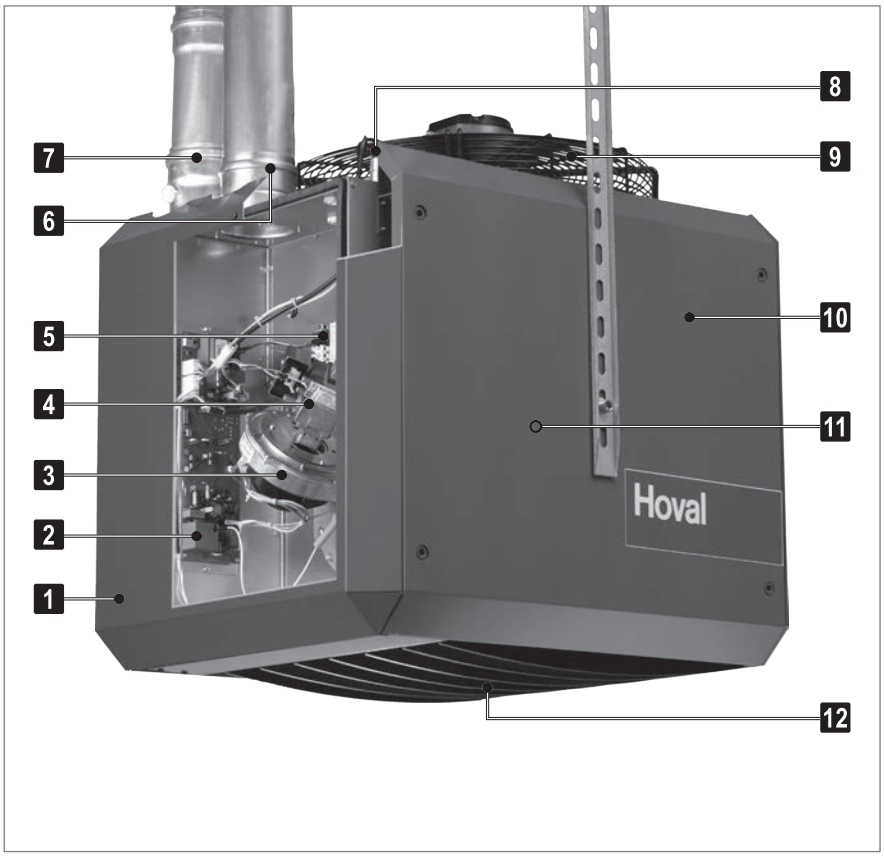

1	**Access panel**
2	**Burner control**
3	**Burner unit:** consisting of stainless steel gas blower and premix burner
4	**Gas valve**
5	**Terminal strip**
6	**Combustion air connection**
7	**Flue gas connection**
8	**Gas connection**
9	**Fan:** maintenance-free and low-noise
10	**Housing:** made from aluzinc sheet steel
11	**Heat exchanger:** of stainless steel
12	**Air outlet louvre:** louvres for manual adjustment of air distribution

Fig. F1: TopVent® GV structure

F

2.1 Operating modes

TopVent® GV operates in the following modes:
- Off
- Recirculation
- Recirculation night

TempTronic regulates these modes of operation automatically.

Code	Operating mode	Use	Layout	
OFF	**Off** The fan is switched off. Frost protection for the room remains active. There is no room temperature control.	if the unit is not needed	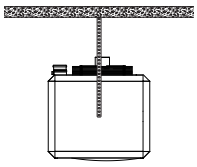	Fan .....off Heater.....off
REC	**Recirculation** On/off-operation: if heating is required, the unit draws in room air, heats it and returns the warm air back into the room. The room temperature set value day is active.	during room use	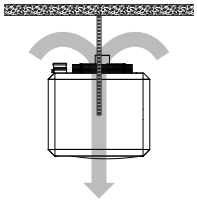	Fan .....modulated [1)] Heater.....modulated [1)] [1)] for heat demand
RECN	**Recirculation night** like REC, but with room temperature set value night	during the night and on weekends		

Table F1: TopVent® GV operating modes

3 Technical data

3.1 Unit type reference

GV - 3 / 30 / ...

Unit type
TopVent® GV

Unit size
3 or 5

Output in kW
10, 20, 30, 40, 50 or 60

Options

Table F2: Unit type reference

3.2 Application limits

Ambient temperature	min.	°C	-15
	max.	°C	35
Supply air temperature	max.	°C	60

The units cannot be used in:
- areas where there is danger of explosion
- places with a corrosive or aggressive environment
- damp locations
- spaces with a large amount of dust

Table F3: TopVent® GV limits of operation

3.3 Air flow rate, gas consumption

Unit type			GV-3/10		GV-3/20		GV-3/30	
Fan speed			**min**	**max**	**min**	**max**	**min**	**max**
Fan speed		min^{-1}	900	1400	900	1400	900	1400
Nominal air flow rate [1]		m³/h	700	1050	1250	1900	1500	2350
Floor area reached [2]		m²	16	25	30	49	36	56
Nominal heat input	max.	kW	9.0	14.0	14.8	22.8	20.5	32.0
Nominal heat output	max.	kW	8.3	12.8	13.8	20.8	19.1	29.2
Combustion efficiency [3]		%	min. 91		min. 91		min. 91	
Gas consumption								
I_{2ELL}, I_{2ELw}, I_{2H}, I_{2E}, I_{2Esi}, $I_{2E(S)B}$, I_{2Er} (G20) H_i = 9.45 kWh/m³ with 20 / 25 mbar gas supply pressure		m³/h	1.0	1.5	1.6	2.4	2.2	3.4
I_{2ELL} (G25) H_i = 8.125 kWh/m³ with 20 mbar gas supply pressure		m³/h	1.1	1.7	1.8	2.8	2.5	3.9
I_{2L}, I_{2Esi}, $I_{2E(R)B}$, I_{2Er} (G25) H_i = 8.38 kWh/m³ with 25 mbar gas supply pressure		m³/h	1.1	1.7	1.8	2.7	2.4	3.8
Unit type			**GV-5/40**		**GV-5/50**		**GV-5/60**	
Fan speed			**min**	**max**	**min**	**max**	**min**	**max**
Fan speed		min^{-1}	900	1400	900	1400	900	1400
Nominal air flow rate [1]		m³/h	2750	4250	3000	4650	3700	5750
Floor area reached [2]		m²	64	100	72	110	90	144
Nominal heat input	max.	kW	26.4	44.0	33.0	54.9	39.6	66.0
Nominal heat output	max.	kW	24.4	40.2	30.8	49.9	37.0	60.5
Combustion efficiency [3]		%	min. 91		min. 91		min. 91	
Gas consumption								
I_{2ELL}, I_{2ELw}, I_{2H}, I_{2E}, I_{2Esi}, $I_{2E(S)B}$, I_{2Er} (G20) H_i = 9.45 kWh/m³ with 20 / 25 mbar gas supply pressure		m³/h	2.8	4.7	3.5	5.8	4.2	7.0
I_{2ELL} (G25) H_i = 8.125 kWh/m³ with 20 mbar gas supply pressure		m³/h	3.2	5.4	4.1	6.8	4.9	8.1
I_{2L}, I_{2Esi}, $I_{2E(R)B}$, I_{2Er} (G25) H_i = 8.38 kWh/m³ with 25 mbar gas supply pressure		m³/h	3.2	5.3	3.9	6.6	4.7	7.9

[1] at an air temperature of 20 °C
[2] with vertical air flow
[3] in accordance with EN 1020

Table F4: TopVent® GV technical data

F

3.4 Electrical connections

Unit type		GV-3	GV-5/40-50	GV-5/60
Supply voltage	V AC	230	230	230
Permitted voltage tolerance	%	+10 / -15	+10 / -15	+10 / -15
Frequency	Hz	50	50	50
Power consumption	W	250	450	600
Current consumption	A	1.1	2.0	2.6

Table F5: TopVent® GV electrical connections

3.5 Gas connection

Unit type	GV-3	GV-5
Gas category: natural gas	I_{2ELL}, I_{2ELw}, I_{2L}, I_{2H}, I_{2E}, I_{2Esi}, $I_{2E(S)B}$, $I_{2E(R)B}$, I_{2Er}	
Gas appliance type [1]	B_{23}, C_{13}, C_{33}	
Gas connection	Rp ½"	R ¾"
Combustion air connection	DN 80	DN 100
Flue gas connection	DN 80	DN 100
Max. length of flue gas duct [2]	4 m	6 m
Max. length of flue gas duct if insulated [2]	8 m	10 m

[1] according to method of flue gas evacuation and combustion air supply
[2] Equivalent length of formed parts:
– 90° elbow.....2 m
– 45° elbow .....1 m
– 90° T-piece ....2 m

Table F6: TopVent® GV gas circuit connections

3.6 Sound levels

Unit type			GV-3		GV-5	
Fan speed			min	max	min	max
Sound pressure level (at a distance of 5 m) [1]		dB(A)	35	53	37	56
Total sound power level		dB(A)	56	75	59	78
Octave sound power level	63 Hz	dB	40	38	43	41
	125 Hz	dB	40	51	43	54
	250 Hz	dB	49	69	52	72
	500 Hz	dB	50	69	53	72
	1000 Hz	dB	51	68	54	71
	2000 Hz	dB	48	68	51	71
	4000 Hz	dB	42	63	45	66
	8000 Hz	dB	36	57	39	60

[1] with a hemispherical radiation pattern in a low-reflection room

Table F7: TopVent® GV sound power levels

3.7 Minimum and maximum distances

Vertical air flow

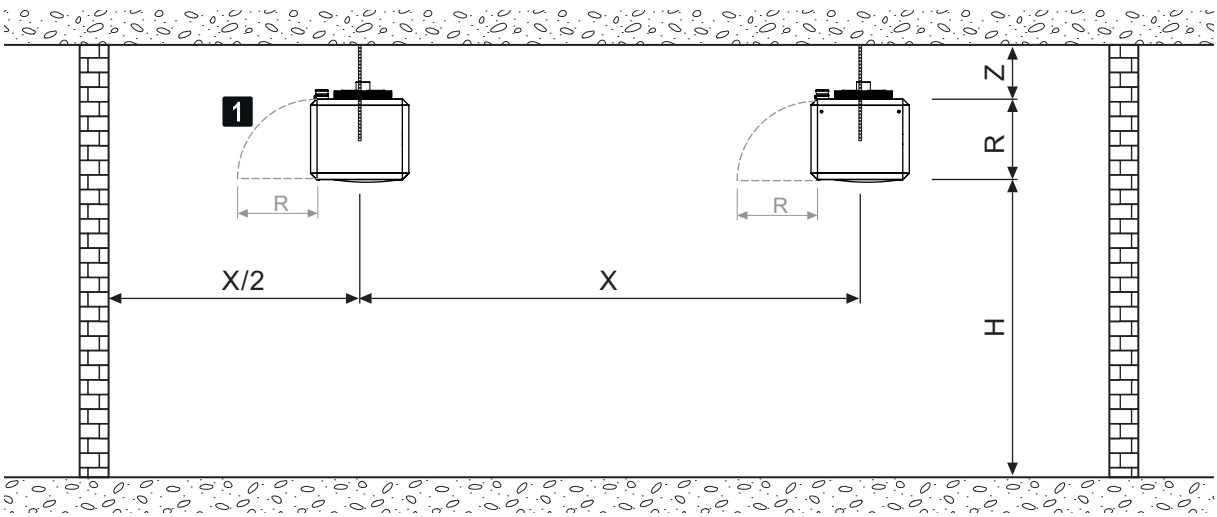

Unit type			GV-3/10	GV-3/20	GV-3/30	GV-5/40	GV-5/50	GV-5/60
Unit height R		m	0.5	0.5	0.5	0.7	0.7	0.7
Unit clearance X	min.	m	4.0	5.5	6.0	8.0	8.5	9.5
	max.	m	5.0	7.0	7.5	10.0	10.5	12.0
Mounting height H	min.	m	2.0	2.0	2.0	2.2	2.4	3.0
	max.	m	2.9	3.1	3.8	4.5	4.7	5.8
Distance from ceiling Z	min.	m	0.5	0.5	0.5	0.5	0.5	0.5
Supply air temperature [1]	max.	°C	47 52 57	43 48 53	47 52 57	38 43 48	42 47 52	42 47 52

1 Allow sufficient free space to open inspection door.

[1] at supply air temperature 10 / 15 / 20 °C

Table F8: Minimum and maximum distances for vertical air flow (ceiling mounting)

F

Horizontal air flow

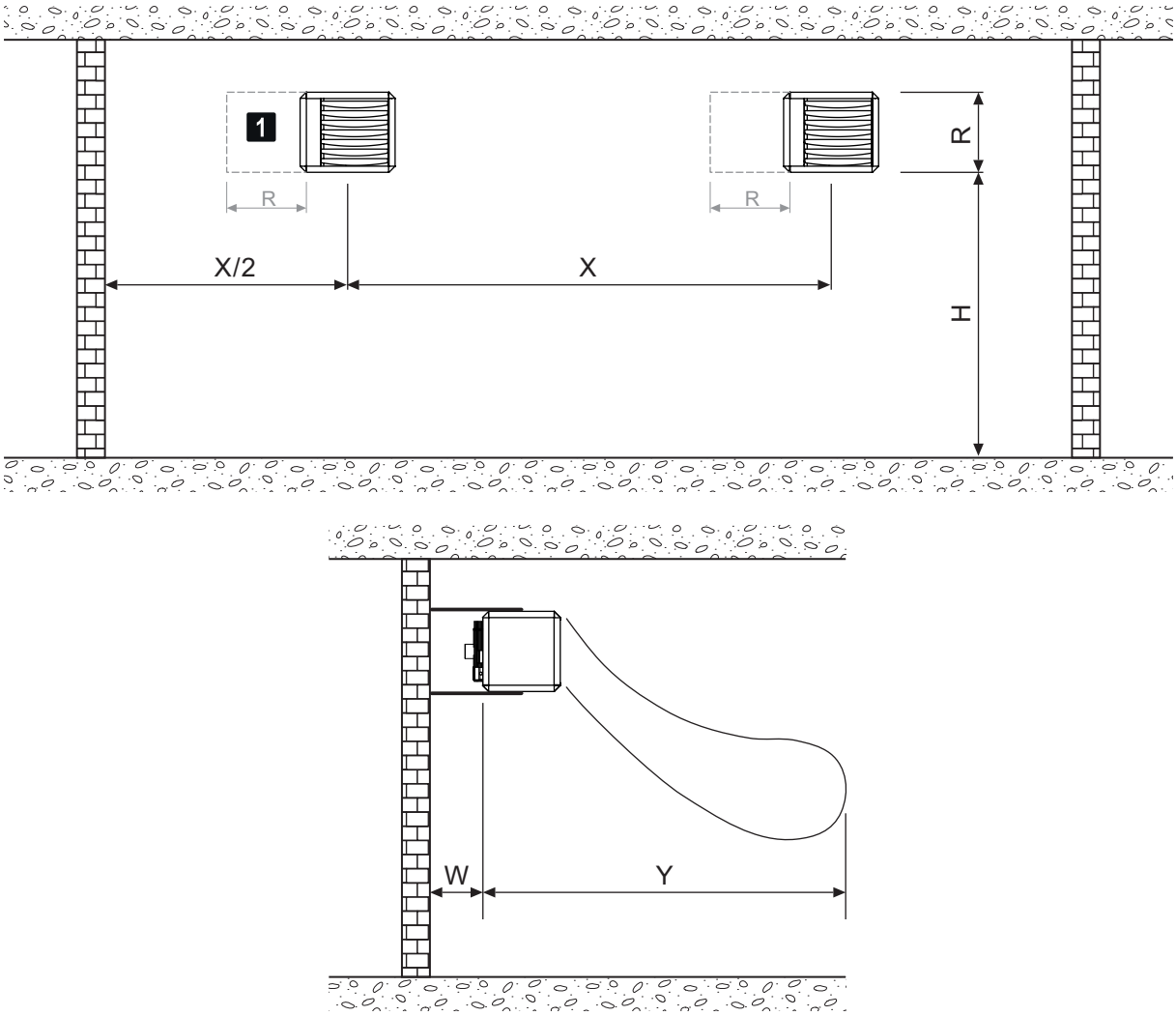

Unit type			GV-3/10	GV-3/20	GV-3/30	GV-5/40	GV-5/50	GV-5/60
Unit height R		m	0.5	0.5	0.5	0.7	0.7	0.7
Unit clearance X	min.	m	5.0	5.0	8.0	10.0	10.0	10.0
	max.	m	8.0	8.0	12.0	14.0	14.0	14.0
Mounting height H	min.	m	1.7	1.7	1.7	2.7	2.7	2.7
	max.	m	2.5	2.5	3.0	3.5	3.5	3.5
Distance from wall W [1]	min.	m	400 – 640	400 – 640	400 – 640	400 – 590	420 – 560	420 – 560
Reach Y	max.	m	8	11	15	17	19	20
Supply air temperature [2]	max.	°C	47 52 57	43 48 53	47 52 57	38 43 48	42 47 52	42 47 52

1 Allow sufficient free space to open inspection door.

[1] The effective distance from wall depends on the method of flue gas evacuation chosen.
[2] at supply air temperature 10 / 15 / 20 °C

Table F9: Minimum and maximum distances for horizontal air flow (wall mounting)

3.8 Dimensions and weight

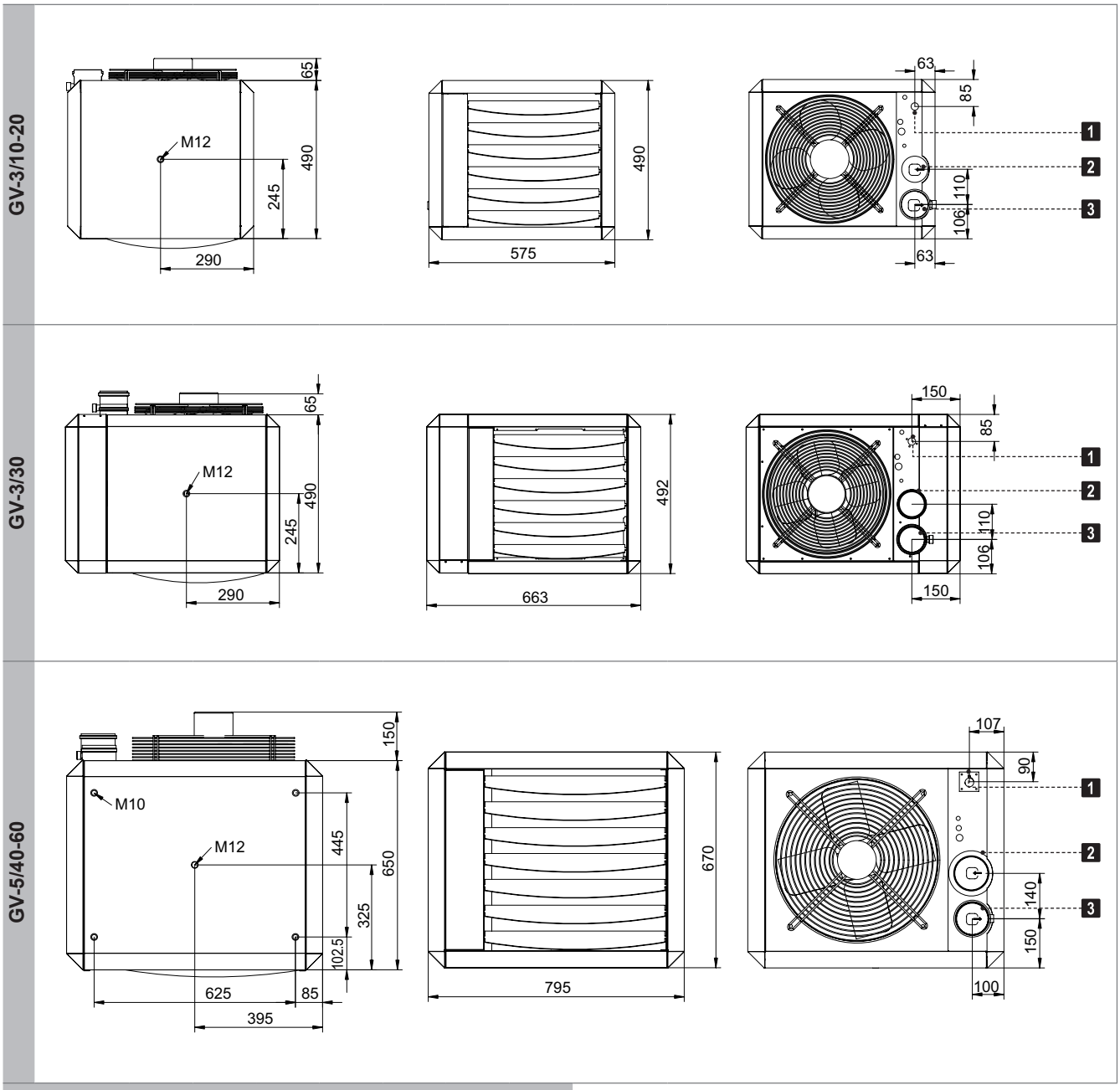

Size		3/10	3/20	3/30	5/40	5/50	5/60
Weight	kg	36	37	38	78	80	82

1 Gas connection

2 Combustion air connection

3 Flue gas connection

Table F10: TopVent® GV dimensions and weights

F

4 Design example

Notice
As a general principle, Hoval recommends vertical air flow, that is, that the units be ceiling-mounted. Use horizontal air flow if ceiling-mounting is not possible due to the particular conditions (added constructions, mounting height).

4.1 Vertical air flow

Input data ■ Geometry of the room (plan) ■ Mounting height (= distance between floor and lower edge of the TopVent® unit) ■ Heating load ■ Desired room temperature	**Example** Dimensions.....15 x 22 m Mounting height.....4 m Heating load .....38 kW Room temperature.....20 °C
Mounting height With the figures for minimum and maximum mounting height (Table F8) check which units can be used. Strike units which are not adequate.	~~GV-3/10~~ GV-5/40 ✓ ~~GV-3/20~~ GV-5/50 ✓ ~~GV-3/30~~ GV-5/60 ✓
Minimum number a) Minimum number based on surface In Table F4 the maximum floor area which can be covered by TopVent® GV can be seen. For a known floor area it is then possible to calculate - for each unit size - the minimum number of units required. b) Minimum number based on length x width Depending on the shape of the hall and in relation to its length and width, a certain number of units will be required. This can be calculated from the maximum distances between the units and between them and the wall (Table F8). c) Minimum number based on heat load Depending on the total heat output required, a minimum number of units can be calculated for each unit size (see Table F4). The highest number from results a), b) and c) is the actual minimum number required.	Calculate the minimum number of units according to a), b) and c) and enter it in a table for each type of unit. Take the highest value as the minimum quantity.

Type	a)	b)	c)		
GV-5/40	4	6	1		6
GV-5/50	3	4	1	➡	4
GV-5/60	3	4	1		4

Definitive number of units Choose the final solution from the remaining possibilities, depending on the geometry of the hall and the costs.	Select four GV-5/50 units.

4.2 Horizontal air flow

Input data ■ Geometry of the room (plan) ■ Mounting height (= distance between floor and lower edge of the TopVent® unit) ■ Heating load ■ Desired room temperature	**Example** Dimensions.....15 x 22 m Mounting height.....3 m Heating load .....38 kW Room temperature.....20 °C
Mounting height With the figures for minimum and maximum mounting height (Table F9) check which units can be used. Strike units which are not adequate.	~~GV-3/10~~ GV-5/40 ✓ ~~GV-3/20~~ GV-5/50 ✓ GV-3/30 ✓ GV-5/60 ✓
Minimum number a) Minimum number based on length x width The number of appliances required depends on the shape of the hall, the separation between the units, and their reach. This number can be calculated from the figures for maximum separation between the units and maximum reach (see Table F9). c) Minimum number based on heat load Depending on the total heat output required, a minimum number of units can be calculated for each unit size (see Table F4). The higher number from results a) and b) is the actual minimum number required.	Calculate the minimum number of units according to a) and b) and enter it in a table for each type of unit. Take the highest value as the minimum quantity.
Definitive number of units Choose the final solution from the remaining possibilities, depending on the geometry of the hall and the costs.	Select two GV-3/30 units.

Type	a)	b)		
GV-3/30	2	2		2
GV-5/40	2	1	➡	2
GV-5/50	2	1		2
GV-5/60	2	1		2

When positioning the units consider the following:
- Do not direct the air current directly at persons.
- Do not install the units at too great a distance from the ceiling, in order to avoid the formation of warm air pockets.
- The units can also be arranged opposite each other or opposite and offset.

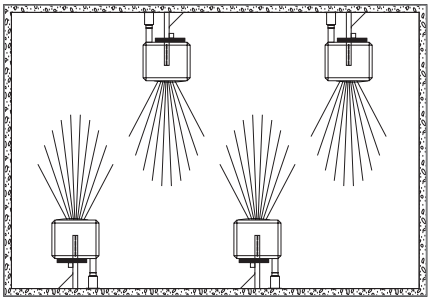

Fig. F2: Offset arrangement of the units on opposing walls

F

5 Options

TopVent® GV can be adapted to the requirements of a specific project thanks to a range of optional equipment. You will find a detailed description of all optional components in Part G 'Options' of this handbook.

Option	Use
Flue gas accessories	for simple installation independently of room air
Suspension set	for mounting unit on ceiling or on the wall

Table F11: Availability of options for TopVent® GV

6 Control systems

TopVent® GV units are controlled by TempTronic RC.
This programmable control unit, developed especially for TopVent® units, offers the following advantages:

- Regulation of the room temperature
- 3 set point values can be set (Room temperature day, Room temperature night and Frost protection temperature)
- Control of operating modes according to week programme and calendar
- Registration of unit malfunctions in an alarm list
- Password protection for user and service personnel
- Menu-guided operation via a 4-line display
- Integrated room temperature sensor

You will find a detailed description of TempTronic in Part H 'Control systems' of this handbook.

7 Transport and installation

7.1 Installation

Caution
Risk of injury from incorrect handling. Have transport and assembly work carried out by trained specialists!

For their installation the units are equipped as follows:

GV-3:	■ Two M12 blind rivet nuts on two opposite sides
GV-5:	■ Two M12 blind rivet nuts on two opposite sides ■ 4 M10 blind rivet nuts on one side
For positions, see Table F10 in chapter 3 'Technical data'	

Table F12: TopVent® GV securing points

The following guidelines are important when preparing for assembly:
- Attach the TopVent® unit using a suspension set (option) or by means of steel flat, slotted steel flat, angles, steel cables, etc.
- Secure the unit only to ceilings or walls of fireproof materials and with sufficient load-bearing capacity.
- Do not use eyebolts.
- Do not install any additional loads.
- Non-vertical suspensions are permissible up to a maximum angle of 45°.
- The appliance is not suited for additional pressure drop; do not tamper with the appliance to carry out any modifications on your own authority (e.g. duct connections), as these are not permitted.

7.2 Installation of the flue gas evacuation and the combustion air supply

Caution
Risk of injury from incorrect handling. Installation of the flue gas evacuation and the combustion air supply may only be carried out by specialists!

Observe national / local regulations when planning the flue gas evacuation and the combustion air supply. From an early stage, coordinate the installation with the responsible district chimney sweep authorities and obtain the necessary authorisation from the local building authority.

Please note the following:
- The units can be installed as room-air-dependent (Type B_{23}) or room-air-independent (Type C_{13}, C_{33}) appliances.
- If the unit is room-air-independent, equip it with the optional flue gas kit.
- For room-air-dependent operation the combustion air is taken directly from the room in which the unit is installed. Ensure the room is sufficiently ventilated and that the combustion air is free from pollutants and aggressive substances (halogens such as chlorides, fluorides, etc.).
- Observe the maximum lengths given in Table F6 (see chapter 3 'Technical data').

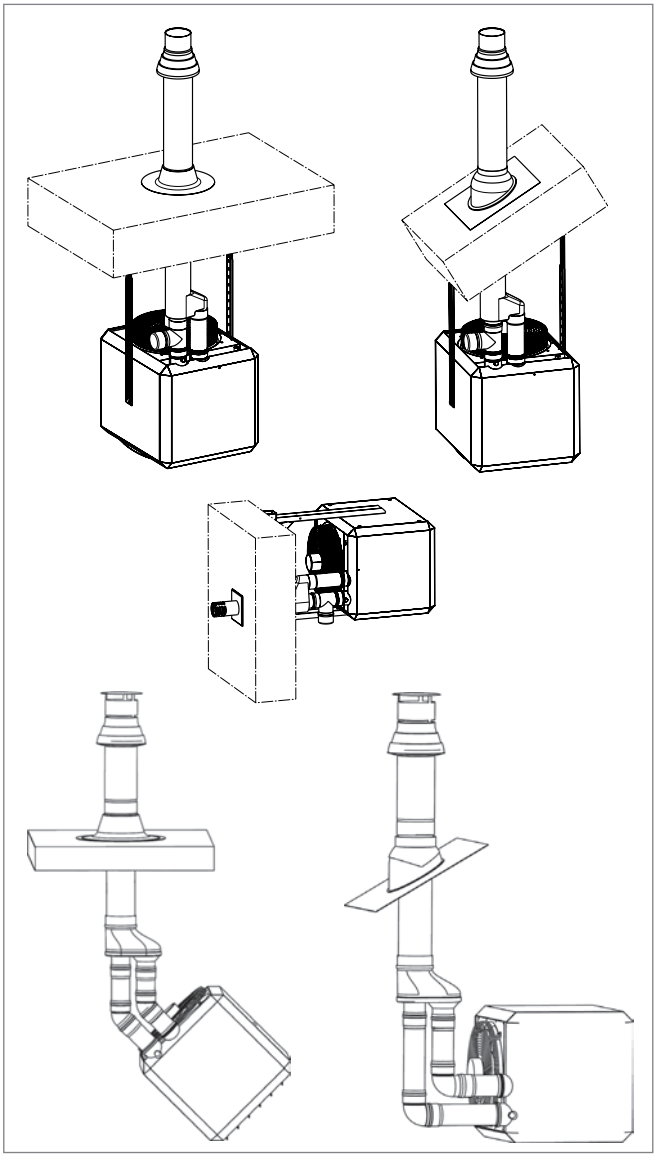

Fig. F3: Installation examples

7.3 Gas connection

Caution
Risk of injury from incorrect handling. The gas connection may only be carried out by specialists authorised by the gas supply company!

Please note the following:
- The fuel used is natural gas. Check the type of gas the unit is set to work with and, if necessary, have Hoval Customer Service reset the unit to the type of gas supplied locally.
- During operation of the unit, the required quantity of gas and the necessary pressure of gas must be present constantly.
- Connect the gas supply line with appropriate bolted joints which can be loosened, tension-free and vibration-free.
- The connection of the unit to the gas supply line must be gas-tight.
- Ensure that a gas pressure regulator and a cut-off-valve (not part of the scope of supply) are installed directly before the unit.

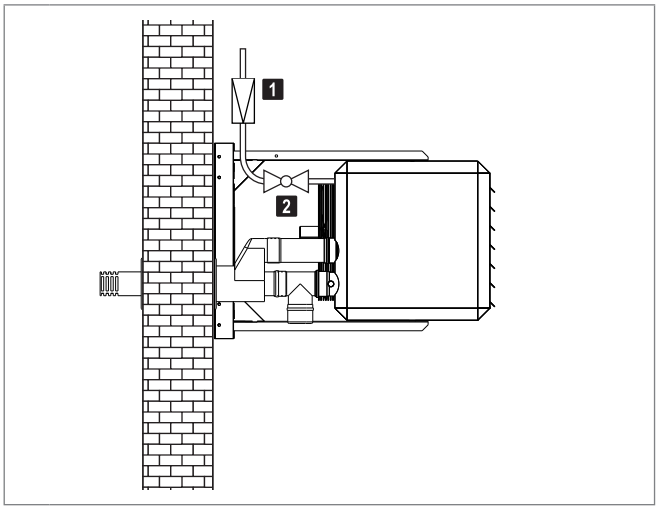

1 Gas pressure regulator (20…50 mbar)

Recommended settings:
– Natural gas .. 20 mbar
– Liquid gas .... 30 mbar

2 Cut-off-valve

Fig. F4: Gas pressure regulator and cut-off-valve in the gas supply line

7.4 Electrical installation

Caution
Danger from electric current. The electrical installation is to be carried out only by a qualified electrician!

- Observe all relevant regulations (e.g. EN 60204-1).
- Check whether the local operating voltage, frequency and fuse protection match the data on the type plate. If there are any discrepancies, the unit must not be connected!
- Cable cross-sections must be selected according to technical regulations, e. g. VDE 0100.
- Electrical installation to be carried out according to wiring diagram.
- Do not forget the master switch for the complete installation.

A TempTronic can control up to 8 TopVent® units simultaneously:
- Connect TempTronic and the units to each other via a system bus.
- With micro switch S2 on the burner control, assign to each unit a number of its own.
- Set switch S3 on the pilot unit burner control in position '1', and in the other units in position '0'.

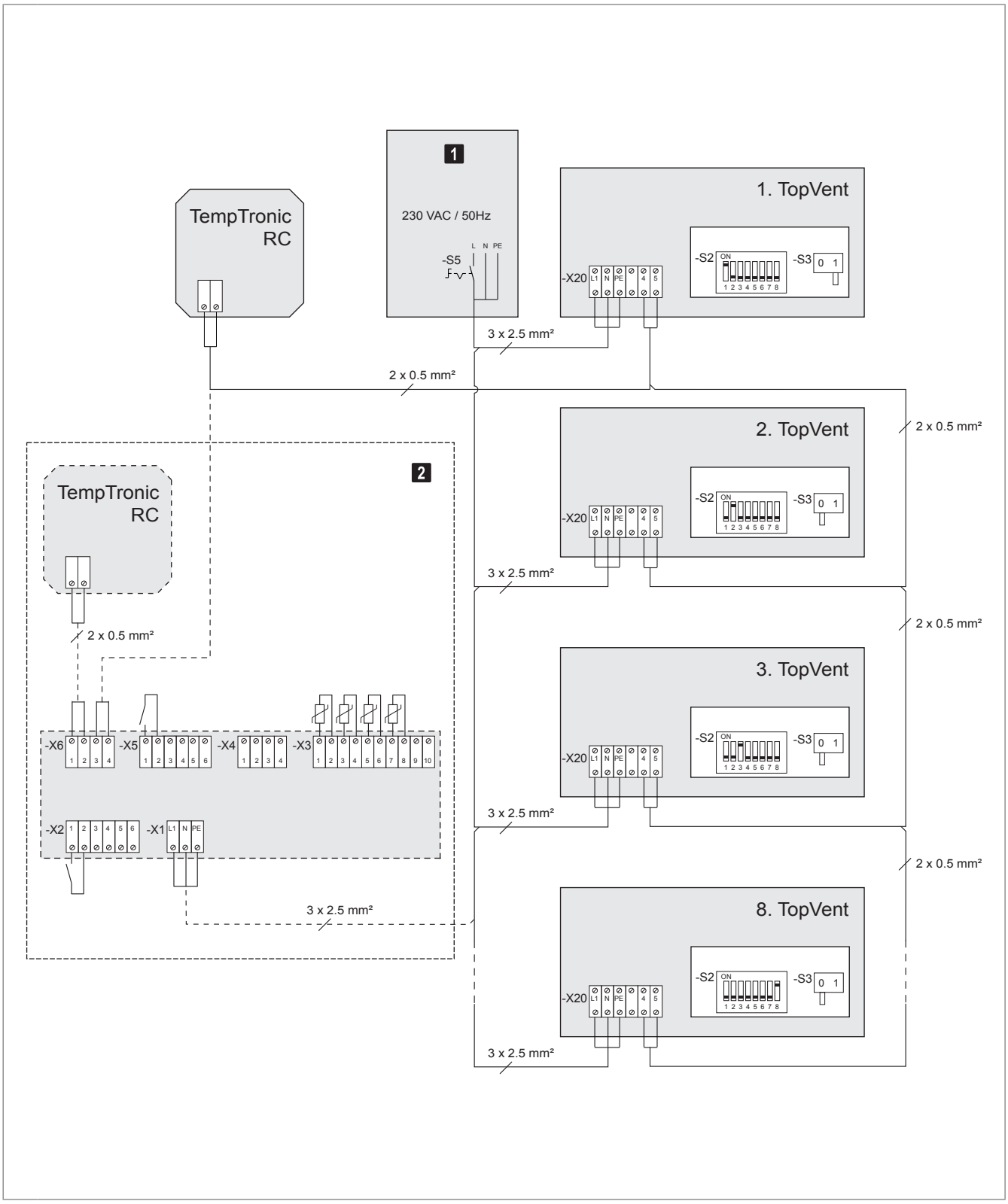

1 Control panel (on site)

2 Variant: connection for TempTronic RC and options module

Fig. F5: Connection diagram

F

8 Specification texts

8.1 TopVent® GV – Gas-fired air recirculation unit for the heating of low-ceiling spaces

Galvanised sheet steel housing with inspection door and two M12 blind rivet nuts for installation of the optional suspension set for ceiling or wall mounting.
Gas-fired heat exchanger of premium-quality stainless steel, fully-automatic premix burner for low-emission burning of natural gas.
Fan unit consisting of a high-efficiency, infinitely variable axial-flow fan with a capacitor motor, maintenance-free and low-noise.
Terminal box integrated in the housing for connection to electricity supply.
Air outlet louvre with manually-adjustable air flow louvres.

Technical data

Fan speed	min	max	
Nominal air flow rate (at 20 °C)	_____	_____	m³/h
Floor area reached	_____	_____	m²
Mounting height	_____	_____	m
Nominal heat output	_____	_____	kW
Power consumption	_____	_____	kW
Current consumption	_____	_____	A
Supply voltage	400 V 3N AC		
Frequency	50 Hz		
Protection rating	IP 20		
Gas category	_____		
Gas appliance type	_____		
Gas supply pressure	_____		
Gas connection	_____		
Combustion air connection	DN ___		
Flue gas connection	DN ___		

<u>Painted in white aluminium (RAL 9006)</u>

GV-3/10	GV-5/40
GV-3/20	GV-5/50
GV-3/30	GV-5/60

<u>Painted in flame red (RAL 3000)</u>

GV-3/10/SL	GV-5/40/SL
GV-3/20/SL	GV-5/50/SL
GV-3/30/SL	GV-5/60/SL

8.2 Options

Flue gas kit AZF / AZS / AZW
for room-air-independent installation (flue gas evacuation and combustion air supply)

Individual components of flue gas accessories
for the adaptation of the flue gas kit to local conditions

Suspension set AH / AHW
for mounting appliances on ceiling or on wall

8.3 Control systems

TempTronic RC programmable regulation system with menu guided operation for fully automated operation of TopVent® units:

- TempTronic RC
- Option module OM
- Room temperature average value MRT4
- External room temperature sensor RF

Content

1 Availability 90

2 Flue gas accessories 91

3 Paint finish 93

4 Suspension set 94

5 Filter box 95

6 Flat filter box 95

7 Acoustic cowl 95

8 Recirculation silencer 96

9 Air outlet box 96

Options

1 Availability

The following optional components are available for the various types of unit:

	Flue gas accessories	Paint finish	Suspension set	Filter box	Flat filter box	Acoustic cowl	Recirculation silencer	Air outlet box
TopVent® DGV	○	○	○	○	○	○	○	○
TopVent® NGV	○	○	○	○	○	–	○	–
TopVent® commercial GA	●	○	–	–	–	○	–	–
TopVent® MG	○	○	○	●	–	○	–	–
TopVent® GV	○	–	○	–	–	–	–	–

Legend:
– = not available
○ = optional
● = standard equipment

Table G1: Availability of options

2 Flue gas accessories

2.1 Flue gas kits

For simple, room-air-independent installation of TopVent® units flue gas kits are available. There are different versions according to the following criteria:

- where the unit is installed (flat roof, pitched roof, wall)
- power output of the units (different nominal diameters will be required, depending on the power level of the unit).

The flue gas kits consist of the following components:

Components	Flat roof	Pitched roof	Wall
Roof bushing	●	●	–
Flange for flat roof	●	–	–
Lead basin with tray	–	●	–
Wall bushing	–	–	●
Exhaust gas pipes (2 pcs)	●	●	●
T-piece	●	●	●
Condensate cap	●	●	●
Elbow bend 90°	●	●	–

Table G2: Components of the flue gas kits

The roof bushings and the wall bushings are painted grey (RAL 7021).

Unit type		Type of flue gas kit			Nominal diameter	Material
		Flat roof	Pitched roof	Wall		
GV	3/10, 3/20, 3/30	AZF-80	AZS-80	AZW-80	DN 80	Die-cast aluminium
DGV, NGV, MG	6/30					
GV	5/40, 5/50, 5/60	AZF-100	AZS-100	AZW-100	DN 100	
DGV, NGV, MG	6/60, 9/60					

Notice: The flue gas kit AZS-100 is part of the standard equipment for TopVent commercial GA units.

Table G3: Specifications of the flue gas kits

Hoval

	Flat roof		Pitched roof		Wall	
	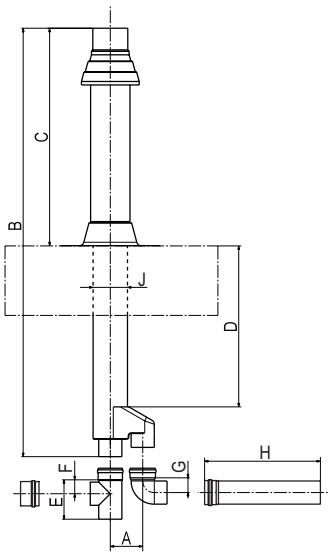		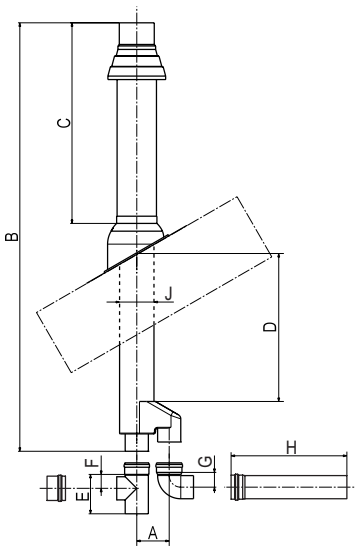		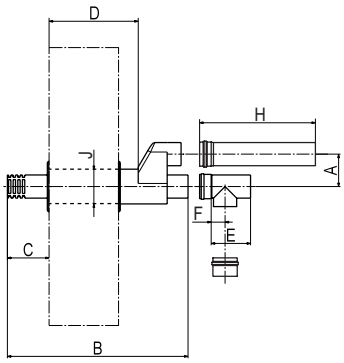	
Type	**AZF**		**AZS [1]**		**AZW**	
	80	**100**	**80**	**100**	**80**	**100**
A	110	140	110	140	110	140
B	1850	1850	1850	1850	780	780
C	939	940	865	865	180	180
D [2]	716	695	660	634	405	385
E	150	170	150	170	150	170
F	50	60	50	60	50	60
G	45	55	45	55	–	–
H	250	450	250	450	250	450
J	125	150	125	150	125	150

[1] Appropriate for roof inclinations between 25° and 45°
[2] The installer can shorten the roof bushing or the wall bushing (concentric pipe) as appropriate in order to adapt it to the particular conditions required.

Table G4: Dimensions of the flue gas kit components (in mm)

2.2 Individual parts

The following individual parts are also available for the adaptation of the flue gas kit to the particular situation:

	DN 80	DN 100
Elbow bend 90° [1]	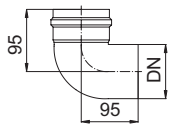	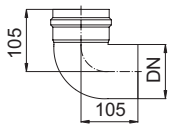
Elbow bend 45° [1]	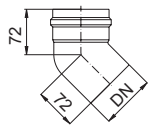	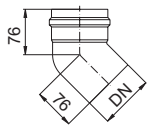
T-piece [1]	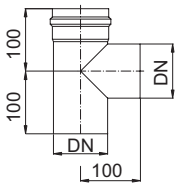	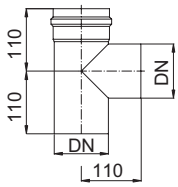
Flue gas pipe [1]	L = 250/500/1000	L = 250/450/950
	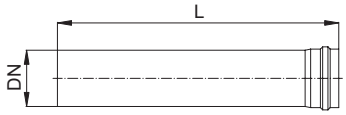	
Length adjustment piece	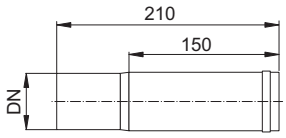	
Condensate cap	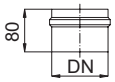	
Pipe clamp	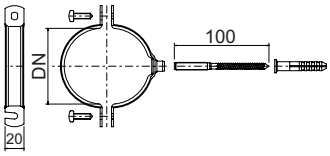	

[1] Insertion depth of pipe collar = 50 mm

Table G5: Flue gas kit components (dimensions in mm)

3 Paint finish

If the customer wishes, the TopVent® units can be provided with an exterior paint finish. There are 2 possibilities:

3.1 Standard paint finish

The individual unit components are painted in the standard Hoval red (RAL 3000) at no extra cost.
Exceptions: Roof hood (not painted) and flue gas accessories

3.2 Paint finish as desired

In order for them to harmonise with the room colour, the units can be delivered with a paint finish in any colour required (at an additional cost, when ordering quote RAL number).

4 Suspension set

For ease of installation of the units on ceiling or wall, there are suspension sets available (complete with nuts and bolts). There are three variants:

Type	Layout	Use with	
AHS	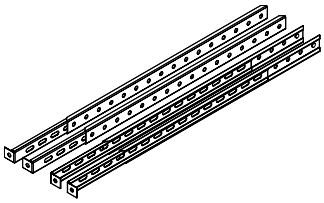	TopVent® DGV, NGV, MG	■ of Aluzinc sheet steel ■ height adjustable to a maximum of 1300 mm
AH	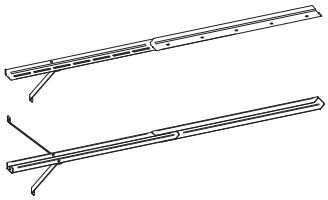	TopVent® GV ceiling mounting	■ of galvanised sheet steel ■ height adjustable to a maximum of 1650 mm
AHW	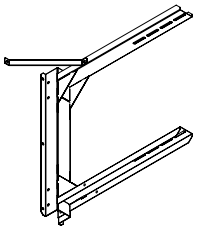	TopVent® GV wall installation	■ of galvanised sheet steel ■ painted black ■ adjustable to the wall separation figures from Table F9 (see Part F 'TopVent® GV')

Table G6: Suspension sets

5 Filter box

A filter box with 2 class G4 bag filters (DIN EN 779) can be installed - or retrofitted - for the purpose of filtering the recirculation air. The modular construction made of Aluzinc sheet metal with 2 sliding doors makes it easy to replace the filters.

Notice
In the planning phase make sure there is enough space in front of the sliding doors so that the filters can be replaced with ease.

Due to the additional pressure drop the output figures of the TopVent® unit will be reduced:
- the air flow rate (and mounting height) by about 13 %
- Heating output by about 8 %

A pressure difference control device is installed for automatic monitoring of the filter. It shows when the filters have to be cleaned or changed.

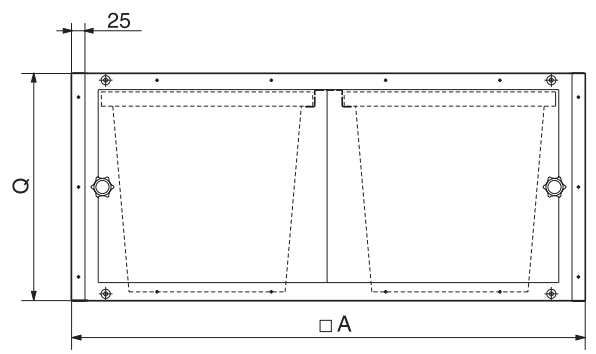

Type		FK-6	FK-9/10
A	mm	900	1100
Q	mm	400	400
Total filter area	m²	2.8	5.2
Filter dimensions	mm	740 x 370 x 300	940 x 470 x 300
Number of filters	–	2	2
Weight	kg	24	28

Table G7: Dimensions and weights of the filter box

6 Flat filter box

A flat filter box can be installed - or retrofitted - for the purpose of filtering the recirculation air. 4 pleated cell-type filters of class G4 can be installed in it.

Due to the additional pressure drop the output figures of the TopVent® unit will be reduced:
- the air flow rate (and mounting height) by about 15 %
- Heating output by about 8 %

A pressure difference control device is installed for automatic monitoring of the filter. It shows when the filters have to be cleaned or changed.

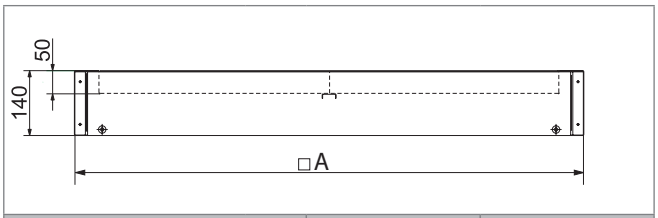

Type		FFK-6	FFK-9/10
A	mm	900	1100
Total filter area	m²	5.8	8.8
Filter dimensions	mm	393 x 393 x 47	495 x 495 x 47
Number of filters	–	4	4
Weight	kg	9	11

Table G8: Dimensions and weights of the flat filter box

7 Acoustic cowl

The acoustic cowl reduces the noise level in the room; it is installed in the Air-Injector. This does not change the outside dimensions of the Air-Injector.
Insertion attenuation is 4 dB compared with the total sound power level of each TopVent® unit.

8 Recirculation silencer

The use of a recirculation silencer for noise reduction is recommended especially for the cases where the TopVent® units are installed under level, hard ceilings (e.g. of concrete or sheet steel). The recirculation silencer is mounted on the appliance and thus reduces the sound reflection from the ceiling. Insertion attenuation is 3 dB compared with the total sound power level of each TopVent® unit.
Install the air recirculation unit as usual by the 4 mounting points on the heating section.

Caution
Risk of injury from falling parts. The silencer cannot bear the weight of the appliance! Do not locate any suspension points on the silencer!

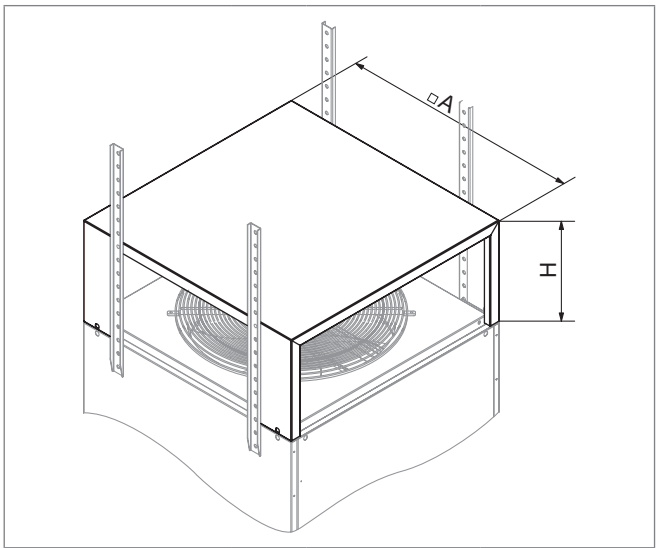

Type		USD-6	USD-9/10
A	mm	900	1100
H	mm	380	485
Weight	kg	15	20

Table G9: Dimensions and weights of the filter box

9 Air outlet box

To adapt TopVent® units to use in low-ceiling spaces, an outlet box instead of the air injector can be mounted. This reduces the minimum mounting height by 1 m compared to the standard design.
The air outlet box has horizontal exhaust air grilles on all sides. The vanes can be manually adjusted without tools to adapt the air discharge angle to the local conditions.

Notice
The air outlet box replaces the Air-Injector. The total height of the unit is somewhat smaller; the weight is approximately the same.

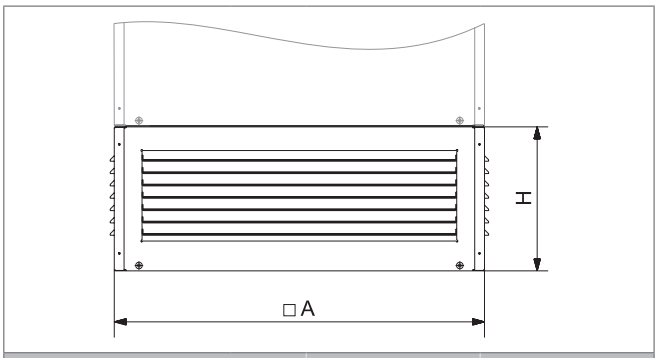

Type		AK-6	AK-9/10
A	mm	900	1100
H	mm	350	400
Weight	kg	36	53

Table G10: Dimensions and weights of the air outlet box

Hoval

1 Availability _____ 98

2 TempTronic RC _____ 98

Control systems

H

1 Availability

The following control system components are available for the different units:

	TempTronic RC	DigiNet
TopVent® DGV	●	●
TopVent® NGV	●	●
TopVent® commercial GA	●	●
TopVent® MG	●	●
TopVent® GV	●	–

Legend: – = not available
● = available

Table H1: Availability of options

Notice
A detailed description of the Hoval DigiNet control system can be found in the design handbook 'RoofVent®. Air handling systems for heating and cooling high spaces.'

2 TempTronic RC

2.1 Intended use

TempTronic RC is an electronic control systems for TopVent® gas appliances. Communication is via a low-voltage bus system. TempTronic RC cannot be used for 24 V, 230 V or other signals.
Also included under intended use are compliance with the installation, commissioning, operating and maintenance provisions (operating instructions). Any use beyond this is considered improper. The manufacturer shall not be held responsible for any damage resulting from such use.

Fig. H1: TempTronic RC

2.2 Construction and operation

TempTronic is connected to the appliances via a system bus and fulfils the following functions:

- Regulation of the room temperature
- Control of air distribution by means of the Hoval Air-Injector
- 3 set point values can be set (Room temperature day, Room temperature night and Frost protection temperature)
- Control of operating modes according to week programme and calendar
- Registration of unit malfunctions in an alarm list
- Password protection for user and service personnel
- Menu-guided operation via a 4-line display
- Integrated room temperature sensor

2.3 Technical data

Feed voltage	Low voltage via system bus
Dimensions (W x H x D)	119 x 119 x 28 mm
Ambient temperature	0…50°C
Protection rating	IP 20

Table H2: Technical specifications of the TempTronic RC

Cable type	1 pair of conductors, twisted, shielded, category 5 or better
Topology	Line bus
Length	Max. 250 m
Capacity	approx. 50 pF/m

Table H3: Specification of the bus cable

2.4 Regulation of the room temperature

TempTronic RC controls up to 8 TopVent® gas units in accordance with heating requirements. In fresh air operating mode the units are constantly in operation; the proportion of fresh air can be regulated (0 – 100 %). In recirculation mode the system operates in the energy-saving on/off mode. The fuzzy-logic-based regulating algorithm switches the units according to criteria different from those of conventional 2-point regulators; the deviations are thus smaller.
The TempTronic RC system comprises an automatic frost protection switching function:

- If the room temperature drops below frost protection temperature, the units are switched on.
- Once the temperature has risen by 2 °C the units switch off again.

The frost protection temperature can be regulated.

Notice
The room air sensor is integrated in TempTronic RC. When positioning the sensor ensure that its readings are not distorted through thermal influences from lamps, machines or other.

2.5 Control of the air distribution

The patented air distributor - the so-called Air-Injector – delivers varying volumes of supply air at different temperatures draught-free to the occupied area of high spaces. This is made possible by the vortex device, by means of which the blow-out direction of the air can be adjusted infinitely variably from vertical to horizontal. It depends on:

- the mounting height
- the air flow rate (→ fan speed)
- the temperature difference between supply air and room air

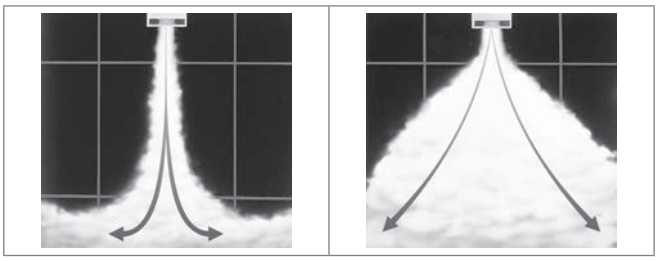

Table H4: Air distribution with the Hoval Air-Injector

In certain cases the Air-Injector can be set to a fixed value when commissioning takes place. For TempTronic RC to adapt automatically the delivery direction of the air to changing operating conditions an actuator is required:

- Option: Actuator for air injector VT-G

2.6 External connections

By means of an optional module, the following additional functions can be controlled:

- Option: Option module OM

Collective trouble indicator
In case of a malfunction a collective alarm can be displayed by means of a volt-free contact (max. 230 V / max. 6 A).

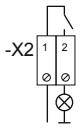

Room temperature average value [1)]
Instead of the integrated room air sensor, 4 sensors can be installed for calculation of the mean value in the occupied area.

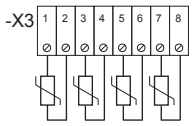

Proportion of fresh air [1)]
The proportion of fresh air can be regulated externally (e.g. via a building master control system).

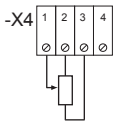

External switching [1)]
The appliances can be switched to the operating mode 'off' (e.g. from a control centre).

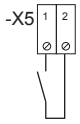

External room temperature sensor [1)]
Instead of the room temperature sensor that is integrated into the TempTronic RC an external sensor can be connected.

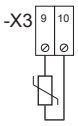

[1)] Recommended cable type: JYSTY 2 x 2 x 0.8 mm²

2.7 Alarms and monitoring

The system monitors itself. All the alarms are registered in the alarm list and displayed by TempTronic RC. Priority A alarms are also displayed via the collective trouble indicator.

Alarm	Priority	Cause	System reaction	Benefit
Gas burner	A	There is a burner malfunction.	The affected unit switches to operating mode 'Off'.	prevents damage to the burner
Fresh air damper	A	The fresh air/recirculation air damper is jammed or its actuator is defective.	The affected unit switches to operating mode 'Off'.	Avoids loss of energy / undefined states of operation.
Filter	B	The pressure difference for filter monitoring was exceeded for more than 5 minutes.	–	Informs the user of the necessity of maintenance work
Isolation	B	The isolation switch on the unit has been in the 'Off' position for more than 30 minutes.	–	avoids unintentional switching off
Supply air sensor	B	The supply air sensor is defective.	The plant operates with the minimum heat output until the fault is eliminated.	Avoids interruptions of plant operation.
Fan	A	A fan motor has overheated.	The affected unit switches to operating mode 'Off'.	Avoids damage to the fan motor.

Table H5: Alarm list

Content

1 Installation site _____ 102

2 Flue gas evacuation _____ 102

3 General notices _____ 102

4 Location of the temperature sensors ___ 102

5 Division of the control zones _____ 102

6 General checklist _____ 103

System design

1 Installation site

- Position the unit in such a way that no one is endangered by flue gas and radiant heat and no fires can break out.
- The supply air jet must be free to spread out unhindered (consider beams and lights).
- The unit must be accessible for maintenance and servicing work. The connecting lines must be able to be dismantled.

2 Flue gas evacuation

- Observe national / local regulations when planning the flue gas evacuation and the combustion air supply.
- Provide suitable openings for the roof and wall bushings of the flue gas ducts (for the dimensions of the flue gas accessories, see Part G 'Options').
- Observe the maximum length of the flue gas duct specified in the 'Technical Data' chapter. If necessary, the flue gas kit can be insulated externally on site using temperature-resistant, non-flammable material.
- The surface temperature of the flue gas pipes amounts to 200°C. During the planning process, please observe the regulations of the responsible fire protection authorities.
- For the flue gas path test, Hoval recommends installing an inspection T-piece (included in the flue gas kit).
- For all diversions, install an inspection T-piece in the flue gas pipe as well.
- In some countries, an annual inspection and emission measured by the responsible authorities is legally required. For this purpose, measurement openings have been provided in the exhaust spout and the access panel.
- In some countries (e.g. in Germany), an emission measurement from the roof is also permissible. For this purpose, provide measurement openings in the flue gas pipe and in the combustion air pipe directly above the roof (on-site installation in three-shell pipe).
- In case of room air dependent installation (Type B_{23}), close off the combustion air connection using a protective screen.

3 General notices

- The flue gas temperature is automatically limited to 200°C. It is thus guaranteed that the combustion efficiency of 91% is always achieved.
- The safety temperature limiter switches off the burner when a temperature of 100°C is exceeded and thus prevents an overheating of the heat exchanger.
- In the order, enter the gas category and the gas supply pressure.
- For combustion with liquid gas, special unit designs are available. Detailed information can be obtained from Hoval's application consulting service.

4 Location of the temperature sensors

4.1 Room air sensor

Install the sensor (integrated into the TempTronic RC) at a representative position in the occupied area at a height of about 1.5 m. Its measured values must not be distorted by the presence of sources of heat or cold (machines, direct sunlight, windows, doors, etc.).
Usually there is one room air sensor per control zone. Four averaging sensors can also be installed.

4.2 Supply air sensor

A supply air sensor has been integrated into each TopVent® gas unit.

5 Division of the control zones

Combine units that work under the same operating conditions into control zones. The TempTronic RC controls up to eight TopVent® gas units of the same type.

6 General checklist

- Can the roof support the units?
- Is the access panel accessible without obstructions?
- Are there any installation obstacles in the hall, such as craneways, machinery, etc.?
- For emission measurements from the roof or for maintenance work on TopVent® commercial GA: is the roof accessible in the vicinity of the units?
- Are the application limits complied with?
- Which gas category is used?
- How high is the gas supply pressure?
- Are unit options required?
- Are control system options required?
- How are the control zones subdivided?
- Which operating options are to be used?
- Where are the operating options to be located?

1 Operation 106

2 Maintenance and repair 106

3 Dismantling 108

4 Disposal 108

Operation

1 Operation

1.1 Start-up

Caution
Risk of damage to property as a result of performing initial start-up on your own authority. Commissioning must be performed by Hoval customer service only!

Checklist to prepare for commissioning:
- Have all media connections been established (flue gas accessories, electrical wiring, gas connection and, if required, condensate drain and air duct connection)?
- Are all the control components installed?
- Are all of the respective trade groups (installer, electrician, designer, etc.) present at the scheduled time?
- Are the system operating personnel present for training at the scheduled time?

1.2 Operation

Caution
Mortal danger in case of escaping gas. If you smell gas:
- Do not smoke.
- Avoid open fire and sparks.
- Disconnect the gas and power supply to the unit.
- Open windows and doors.
- Call Hoval customer service.

The system runs fully automatically depending on the operating times and temperature conditions.
- Observe the operating instructions for the control units.
- Check alarm displays daily.
- Correct changes to operating times in the automatic programming.
- Ensure free air outlet and unhindered dispersion of the supply air.

1.3 Decommissioning

- Switch the unit to the 'OFF' mode.
- Close the shutoff vale in the gas supply line.
- Let the unit cool off. The fan continues to run to cool down the heat exchanger.
- When the fan comes to a stop: switch off the plant on the main switch.

1.4 Putting into operation again

- Open the shutoff valve in the gas supply line.
- Switch on the plant on the main switch.
- Select the desired operating mode on the control units.

2 Maintenance and repair

2.1 Safety during maintenance

- Before all work: switch the unit to the 'OFF' mode.
- Close the shutoff vale in the gas supply line.
- Let the unit cool off. The fan continues to run to cool down the heat exchanger.

Attention
Danger of burning due to hot components. Do not switch off the power supply until the fan comes to a complete stop!

- Switch the isolation switch to the 'Off' position.
- Observe the accident prevention regulations.
- Observe the particular dangers involved in working on the roof and on electrical systems.
- When working on the unit, objects (e.g. tools) could be dropped. Block off the area underneath the unit.
- Do not attach additional loads to the unit.
- When working in the unit, take precautions against unprotected, sharp steel plate edges.
- Wear suitable protective equipment (helmet, gloves, mouth protection).
- Immediately replace damaged or removed informational and warning signs.
- Following maintenance work, professionally reassemble all dismantled protective devices.
- Unauthorised reconfiguration or modification of the unit is not permitted.
- Replacement parts must comply with the technical requirements of the system manufacturer. Hoval recommends the use of original replacement parts.

2.2 Filter change

Caution
Risk of injury if work is not performed appropriately.
Filters must be changed by trained personnel!

In TopVent® gas units that are equipped with a filter, a pressure difference monitor has been installed for the monitoring of the filter. Change the filter if the 'Filter' alarm appears on the control unit:

TopVent® DGV, NGV, MG

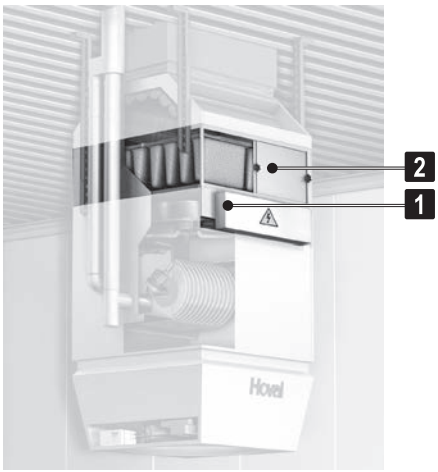

TopVent® commercial GA

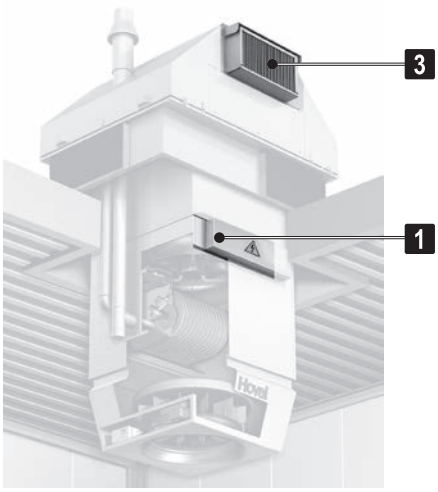

1	Isolation switch
2	Sliding doors
3	Weather protection

Table J1: Position of the filters

Changing the filters – TopVent® DGV, NGV, MG

- Switch the isolation switch (Item 1) to the 'Off' position and wait until the fan comes to a stop.
- Open both sliding doors in the filter box (Item 2) one after the other, change the filters, and reclose the sliding doors.
- Switch the isolation switch to the 'On' position again.

Changing the filters – TopVent® commercial GA

- Switch the isolation switch (Item 1) to the 'Off' position and wait until the fan comes to a stop.
- Unscrew the weather guard grille (Item 3) (M6 screws) and loosen the silicone seal.
- Change the filter.
- Remount the weather guard grille and seal it with silicone.
- Switch the isolation switch to the 'On' position again.

2.3 Inspection and maintenance work

Caution
Risk of injury if work is not performed appropriately.
Annual inspection to be carried out only by Hoval customer service!

The following work is carried out during the annual inspection:

- Emission measurement
- Flue gas path test
- Visual inspection of the heat exchanger
- Function test
- Check of the settings

2.4 Repairs

Caution
Risk of injury if work is not performed appropriately.
Repair work to be carried out only by Hoval customer service!

Please contact Hoval customer service if needed.

3 Dismantling

Caution
Risk of injury if work is not performed appropriately.
Dismantling must be carried out by specialists!

3.1 TopVent® DGV, NGV, MG

Make sure that a lifting platform is available for the disassembly. Proceed as follows:
- Shut down the TopVent® gas unit.
- Disconnect all media connections from the unit (flue gas accessories, electrical wiring, gas connection and air duct connection).
- Secure, disassemble, and remove the unit from the installation site.

3.2 TopVent® commercial GA

Make sure that the following items are on hand:
- A crane or helicopter
- Two lifting belts (belt length approx. 6 m each)
- Two snap hooks

Proceed as follows:
- Shut down the unit.
- Disconnect all media connections from the unit (flue gas accessories, electrical wiring, gas connection and air duct connection).
- Hook the lifting gear into the four lugs on the side of the unit.
- Lift the unit and transport it away from the installation site.

4 Disposal

When disposing of components of TopVent® gas units, please observe:
- Recycle metal components.
- Recycle plastic parts.
- Dispose of electric and electronic parts via hazardous waste.

TopVent® gas design handbook
Subject to technical alterations
Art.No. 4212804 – Edition 03/2014
© Hoval Aktiengesellschaft, Liechtenstein, 2007

Hoval

Responsibility for energy and environment

The Hoval brand is internationally known as one of the leading suppliers of indoor climate control solutions. More than 65 years of experience have given us the necessary capabilities and motivation to continuously develop exceptional solutions and technically advanced equipment. Maximising energy efficiency and thus protecting the environment are both our commitment and our incentive. Hoval has established itself as an expert provider of intelligent heating and ventilation systems that are exported to over 50 countries worldwide.

Hoval heating technology

As an energy-neutral supplier with a full range of products, Hoval helps its customers to select innovative system solutions for a wide range of energy sources, such as heat pumps, biomass, solar energy, gas, oil and district heating. Services range from private residential units to large-scale industrial projects.

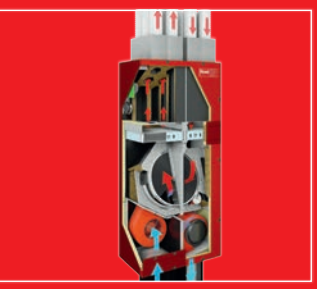

Hoval comfort ventilation

Increased comfort and more efficient use of energy from private housing to industrial halls: our comfort ventilation products provide fresh, clean air for living and working space. Our innovative system for a healthy room climate uses heat and moisture recovery, while at the same time protecting energy resources and providing a healthier environment.

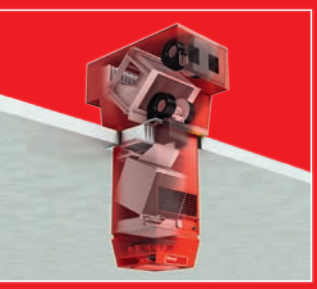

Hoval indoor climate systems

Indoor climate systems ensure top air quality and economical usability. Hoval has been installing decentralised systems for many years. The key is to combine multiple combinations of air-conditioners that can be controlled separately or together as a single system. This enables Hoval to respond flexibly to a wide range of requirements for heating, cooling and ventilation.

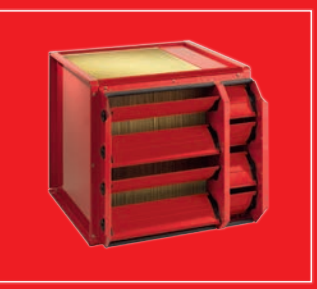

Hoval heat recovery

Efficient use of energy due to heat recovery. Hoval offers two different solutions: plate heat exchangers as a recuperative system and rotary heat exchangers as a regenerative system.

International
Hoval Aktiengesellschaft
Austrasse 70
9490 Vaduz, Liechtenstein
Tel. +423 399 24 00
Fax +423 399 27 31
info.klimatechnik@hoval.com
www.hoval.com

United Kingdom
Hoval Ltd.
Northgate, Newark
Nottinghamshire
NG24 1JN
Tel. 01636 672711
Fax 01636 673532
hoval@hoval.co.uk
www.hoval.co.uk