ACCESSORIES

Hoval

Responsibility for energy and environment

Matching components to ensure proper system function.

Page

Basic modules

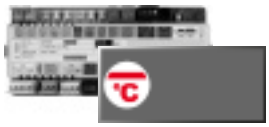

Controller modules

Page

Module expansions

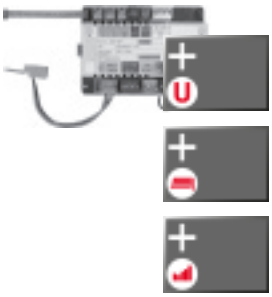

Accessories

HovalConnect available from summer 2019
Up to that point, TopTronic® E online is delivered.

Description

TopTronic® E basic module heat generator

- Control unit for controlling heat generators and the associated consumers with integrated control functions for:
  - Heat generator management
  - Add. heat generator management
  - Cascade management
  - 1 heating/cooling circuit without mixer
  - 1 heating/cooling circuit with mixer
  - 1 DHW loading circuit
  - Various additional functions
- Connection technology executed as plug-in screw terminals in coded RAST-5 design
- Update capability of the controller software
- Time and date via integrated RTC, multi-year spring reserve
- Fine fuse 10 A
- Control unit suitable for cabinet installation thanks to ability to install on DIN rail 35 x 15 x 2.2 mm
- Expansion possibilities via Hoval CAN bus:
  - max. 16 controller modules in the bus system
  - Cascade connection of 8 different heat generators possible
  - can be extended to up to 48 heating circuits

Notice
Operation of the controller module is generally via the TopTronic® E control module installed in the heat generator!
In a standalone application, the control module for operating the basic module heat generator must be ordered separately!

Inputs and outputs
- Communication to an extremely wide range of automatic function units (oil, gas, HP, biomass) via RS485 interface
- OpenTherm interface for connecting an automatic gas firing unit
- 0-10 V input, e.g. for connecting to heat zone control systems
- 0-10 V or PWM output for controlling a variable-speed pump or for connecting an additional heat generator via 0-10V interface (e.g.: solid-fuel boiler, etc.)
- Connection of a flow rate sensor (pulse sensor), e.g. for heat metering at the heat generator, on the heating circuit or with hot water
- 230 V 3-point output, e.g. for controlling the mixer
- 230 V output, e.g. for controlling the circulating pump
- 230 V optocoupler input connected in series to the variable 230 V output, e.g. for connecting a flow temperature guard for monitoring underfloor heating systems
- Variable inputs and outputs:
  - variable 230 V output plus continuous phase (e.g.: connection of a HW gate)
  - variable 230V output (e.g.: connection of the direct circuit pump)
  - extra-low voltage output (12 V) (e.g. controlling a signal LED)
  - variable input for connection of a sensor
  - variable input for connection of a sensor or pulse sensor
- Connection plug for simple connection of a main switch

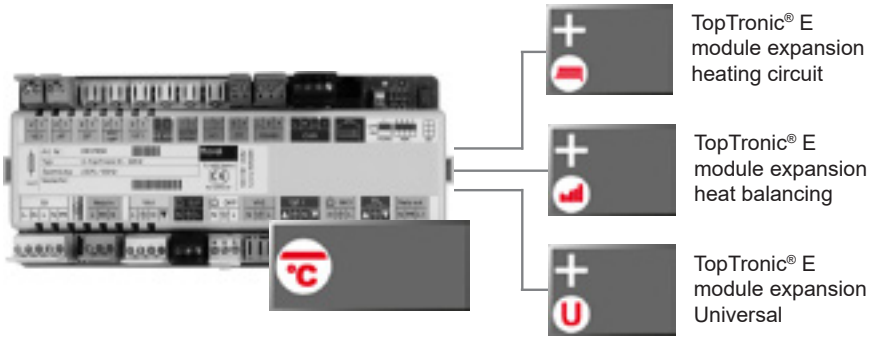

Max. 1 module expansion can be connected.

Option
- Can be expanded by max. 1 module expansion (expansion of the inputs/outputs):
  - Module expansion heating circuit (1 heating/cooling circuit with/without mixer) or
  - Module expansion heat balancing (heat balancing in the heating system) or
  - Module expansion Universal (various special functions)

Functions
- Simple configuration and parameter setting of the plant by predefined hydraulic and function applications
- Weather-supported flow temperature controller for cooling operation with or without room influence taking account of building characteristics and switch-on optimisation
- Optimisation of the heating circuit flow temperatures and improvement in the room climate taking account of the weather forecast (only possible in combination with HovalConnect)
- Different basic programs (week programs, economy mode, holiday until, etc.) can be defined for each heating/cooling circuit plus ability to activate manual operation (construction site mode)
- Separate switching time programs for each heating/cooling circuit as well as for hot water with
  - 2 individually preset week programs comprising
    - 5 different - individually preset - day programs with
    - 6 switching points per day
- Different temperatures can be set for each switching cycle
- Various functions for hot water:
  - Selection of different basic programs (week programs, economy mode, holiday until, etc.)
  - various operating modes (e.g. accumulator priority or parallel mode)
  - adjustable storage tank pump post-operation
  - Storage tank discharge protection
  - Limiting and protection functions
- Definable switching times for circulation pump control
- Automatic changeover of summer/winter time
- Heating characteristic adaptation possible for each individual heating circuit
- Screed drying function for underfloor heating
- Requirement contact for constant requirements (ventilation, swimming pool, ...)
- Modem switching function
- Free timer switch channel
- Pump anti-blocking protection
- Frost protection function
- Heat balancing for heat generator, heat circuit or hot water
- Plant flow control (3-point mixer for controlling the plant reference temperature)
- Cleaning and maintenance function
- SmartGrid functions
- Optimum adaptation of the control characteristics for various heat generators
- Integration of an additional heat generator via 0-10 V or switching contact
- Cascade management that is activated following the combination with other basic modules (up to 8 heat generators)
- Definition of priorities for switching over between heating, cooling and hot water operation
- Operating hours and pulse counter
- Heat generator forced removal
- Constant return increase
- Minimum value override
- Emission measurement with adjustable duration
- Collective fault message output
- Output of the current temperature or current output via 0-10 V possible
- Thermostat function for bivalent plants
- Self-test with error diagnosis and error memory
- Relay test for each output can be activated separately
- Functions that can be implemented with module expansions:
  - Heating/cooling circuits without mixer
  - Heating/cooling circuits with mixer or
  - hot water loading circuits
  - Various additional functions

Notice
Depending on the complexity, module expansions are required for using the listed functions (max. 1 module expansion can be connected)!

Description

Use

- Heat generator with automatic function device fitted
  - Connection either via the RS485, OpenTherm or 0-10 V interface
  - Automatic firing units can be configured with 1/2-stage or modulating
- Heat pump systems with active/passive cooling function
- Control for multiple heat generator systems by integrated cascade management
- Control of an additional heat generator by release contact (solid-fuel boiler), 0-10 V temperature request or 0-10 V output requirement
- For room heating/cooling and hot water charging circuit
- For optimisation of the room climate by control algorithm taking account of the weather forecast (only possible in combination with HovalConnect)
- Upstream control for technical systems such as ventilation, air conditioning systems, etc. or also for heating zone control systems
- For decentralised assembly - remote from the control module - directly at the sensors and actuators:
  - Installation in wall casing/control panel
  - Connection to the operating unit via Hoval CAN bus
- With significant expansion capability by controller modules via the Hoval CAN bus
- For flexible integration of heat generators in modern communication systems via different interfaces
- For remote connection of heat generators via HovalConnect

Delivery

- TopTronic® E basic module heat generator
- 2x mounting clips for DIN rail attachment
- 1x outdoor sensor AF/2P/K
- 1x immersion sensor TF/2P/5/6T/S1, L = 5.0 m with plug
- 1x contact sensor ALF/2P/4/T/S1, L = 4.0 m with plug
- Basic plug set for basic module
  - Plug for buffer storage pump (SLP), direct circuit pump (DKP), mixer circuit pump (MK1), mixer (YK1), flow temperature guard (B1), variable output (VA1)
  - 2x plug for sensor (AF/SF)
  - Various plugs for internal wiring (mains in, mains out, connection of automatic firing device, bus connector RS485, bus connector OpenTherm, CAN bus)

Notice
The supplementary plug set may have to be ordered to implement functions differing from the standard!

Description

Functions that can be implemented

TopTronic® E basic module heat generator

TTE-WEZ	1 heat generator	1 heat generator with return temperature control	1 additional heat generator	Plant flow control	1 direct heating circuit	1 mixed heating circuit	2 mixed heating circuits	1 calorifier	1 calorifier with changeover unit
Hydr. 0	x								
Hydr. 1	x				x			x	
Hydr. 2	x				x				x
Hydr. 3	x					x		x	
Hydr. 4	x				x	x		x	
Hydr. 5	x						x	x	
Hydr. 6	x				x		x	x	
Hydr. 9		x							
Hydr. 10		x			x			x	
Hydr. 11		x				x		x	
Hydr. 12		x			x	x		x	
Hydr. 14	x			x					
Hydr. 15	x			x	x			x	
Hydr. 16	x			x		x		x	
Hydr. 17	x			x	x	x		x	
Hydr. 19	x		x						
Hydr. 20	x		x			x		x	

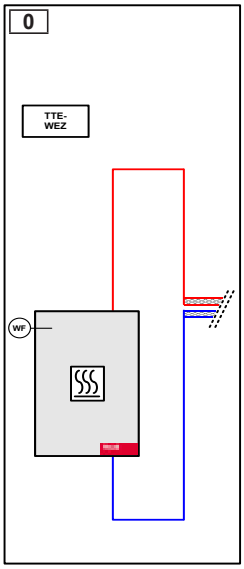

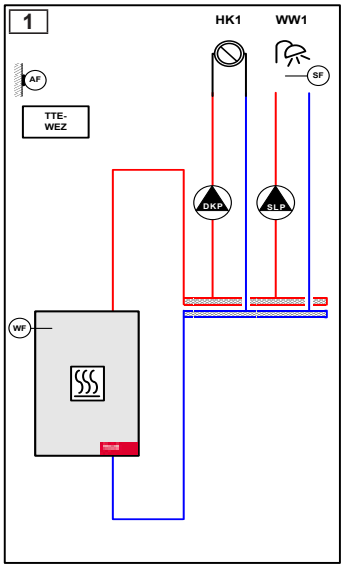

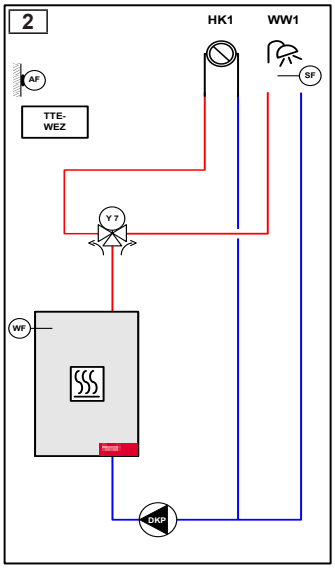

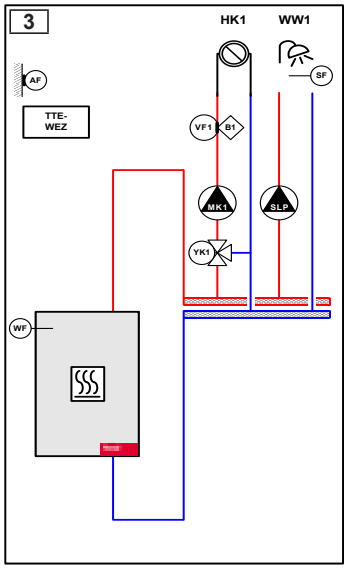

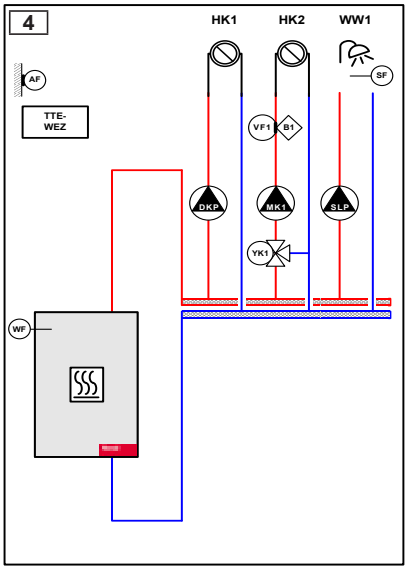

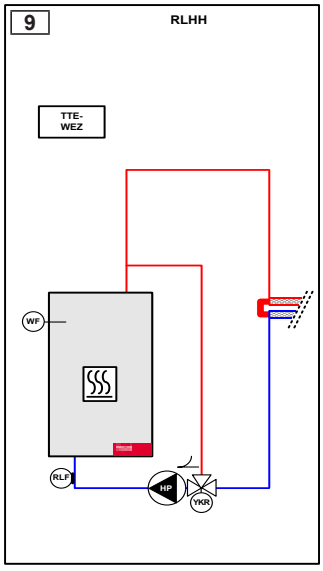

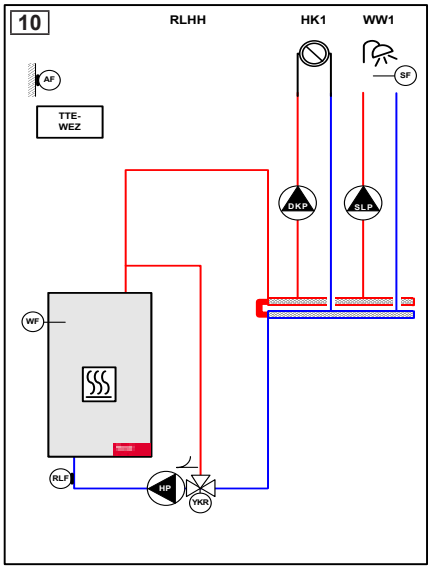

Description

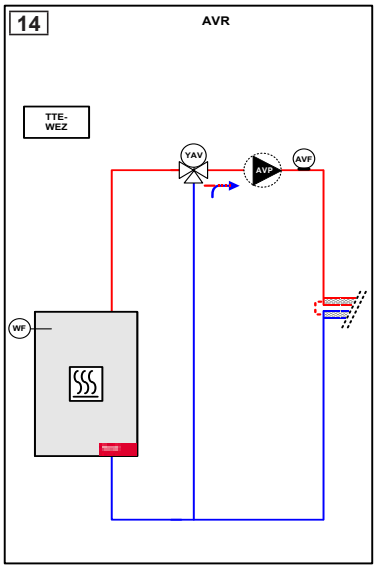

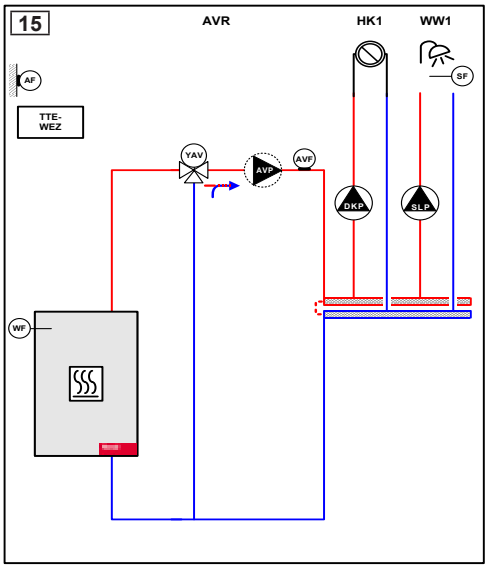

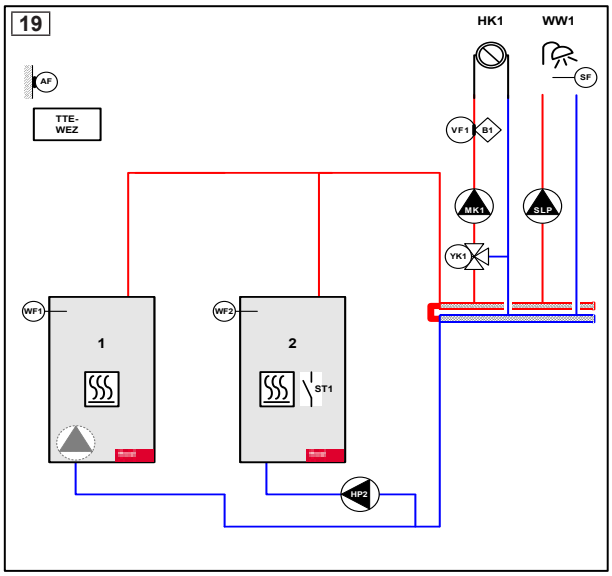

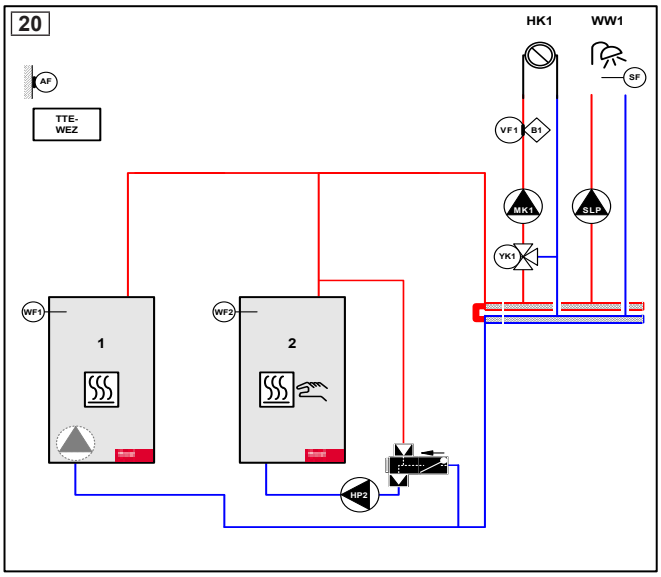

Description

TopTronic® E basic module heat generator and 1 module expansion

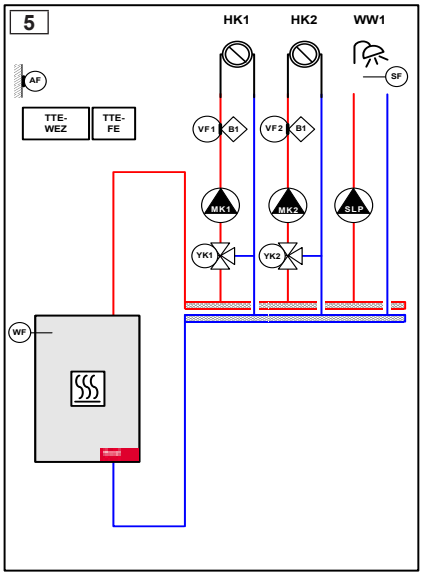

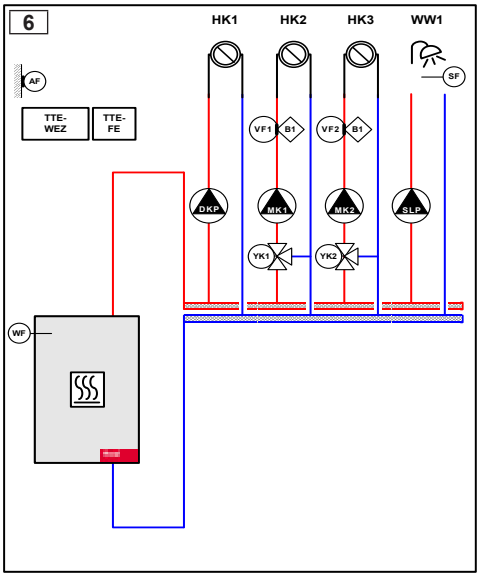

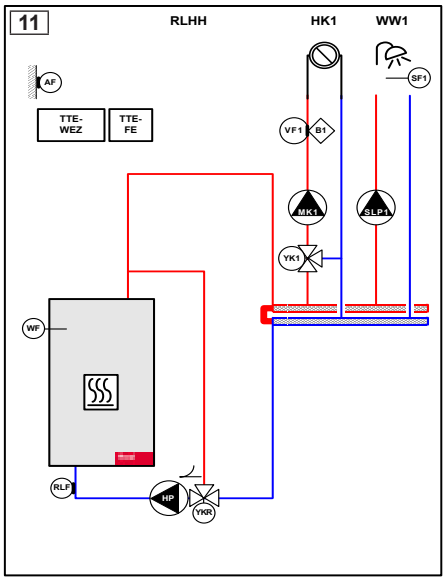

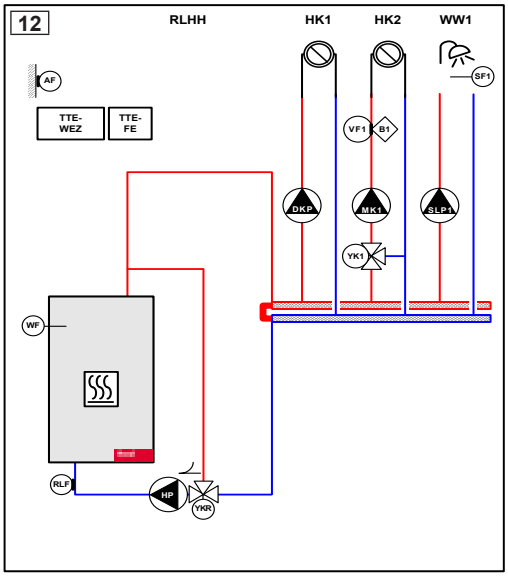

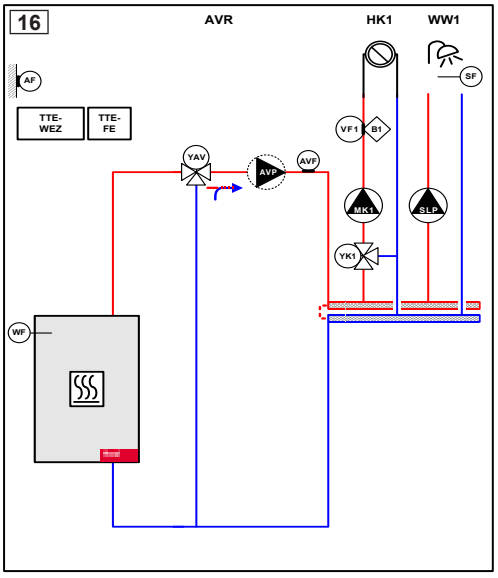

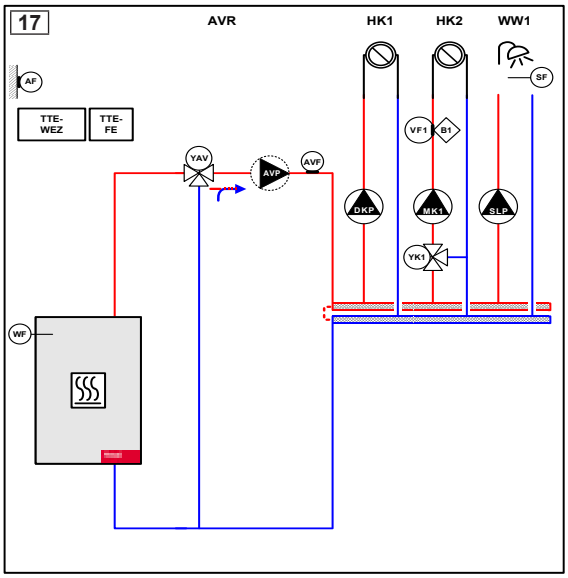

Part No.

TopTronic® E basic module heat generator	Part No.

TopTronic® E basic module heat generator TTE-WEZ
Controller module for controlling heat generators and the corresponding consumers with integrated control functions for:
- heat generator management
- additional heat generator management
- cascade management
- 1 heating/cooling circuit w/o mixer
- 1 heating/cooling circuit with mixer
- 1 hot water loading circuit
- various additional functions
 	
Consisting of:
TopTronic® E basic module heat generator incl. 2 pcs. mounting clips for top hat rail attachment
- 1 pce. outdoor sensor AF/2P/K
- 1 pce. immersion sensor TF/2P/5/6T/S1 L = 5.0 m with plug
- 1 pce. contact sensor ALF/2P/4/T/S1 L = 4.0 m with plug
- basic plug set for basic module:
  - plug for buffer storage pump (SLP), direct circuit pump (DKP), mixer circuit pump (MK1), mixer (YK1), flow temperature monitor (B1), plug for variable output (VA1)
  - 2x plugs for sensors (AF/SF)
  - various plugs for inner wiring (mains in, mains out, connection automatic firing device, bus plug RS485, bus plug OpenTherm, CAN bus)
	6037 053

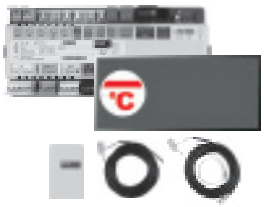

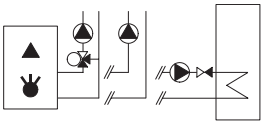

Notice
If the basic module is used without Hoval heat generator then a TopTronic® E control module must be ordered separately!

Notice
Depending on the complexity, module expansions are required for using the listed functions (max. 1 module expansion can be connected)!

Notice
To implement functions differing from the standard the supplementary plug set may have to be ordered!

Supplementary plug set for TTE-WEZ Consisting of Rast-5 mating plugs for connecting further sensors and actuators on the basic module heat generator. The controller module is already equipped with a basic plug set, the supplementary plug set is required for advanced functions. Consisting of: - plug for 230 V output (VA2) (variable output) - plug for sensor (variable input) (VE2) - plug for 0-10 V input (VE10V) - plug for 0-10 V/PWM output (VA10V) - plug for low-voltage output (H1)	6034 499

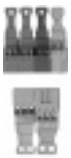

Part No.

TopTronic® E module expansions for TopTronic® E basic module heat generator	Part No.
Max. 1 module expansion can be connected.	

TopTronic® E module expansion heating circuit TTE-FE HK
Expansion to the inputs and outputs of the basic module heat generator or the heating circuit/domestic hot water module for implementing the following functions:
- 1 heating/cooling circuit w/o mixer or
- 1 heating/cooling circuit with mixer
 	
Consisting of:
- TopTronic® E module expansion
- top hat rail with fitting accessories
- ribbon cable for connecting the
- device bus to the controller module
- connection set for connecting the
- controller module to the mains voltage
- 1 pce. contact sensor ALF/2P/4/T, L = 4.0 m
- basic plug set for module expansions:
  - Plug for 230 V output (VA3)
  (direct circuit pump, mixer circuit pump)
  - Plug for 2x 230V output (mixer)
  - (VA1/VA2)
  - Plug for optocoupler input (SK-VA3)
  (flow temperature monitor)
  - 2x plugs for sensors (VE1/VE2)
  - Plug for 0-10V or PWM output (VA10V)
	6034 576

Notice To implement functions differing from the standard the supplementary plug set may have to be ordered!	
Supplementary plug set for controller modules and module expansion TTE-FE HK Consisting of Rast-5 mating plugs for connecting further sensors and actuators on the controller module or on the module expansion. The controller module is already equipped with a basic plug set, the supplementary plug set is required for advanced functions. Consisting of: - Plug for mains out - Plug for sensor (variable input) (VE3) - Plug for 0-10V or PWM output (VA10V) - Plug for flow rate sensor (FVT)	6034 503
TopTronic® E module expansion Universal TTE-FE UNI Expansion to the inputs and outputs of a controller module (basic module heat generator, heating circuit/domestic hot water module, solar module, buffer module) for implementing various functions Consisting of: - TopTronic® E module expansion - top hat rail with fitting accessories - ribbon cable for connecting the device bus to the controller module - connection set for connecting the controller module to the mains voltage - complete plug set for module expansions	6034 575

Notice
Refer to the Hoval System Technology to find which functions and hydraulic arrangements can be implemented.

Part No.

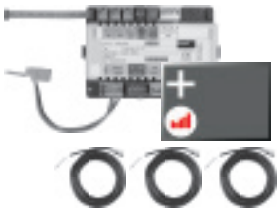

	Part No.
TopTronic® E module expansion heating circuit incl. energy balancing TTE-FE HK-EBZ Expansion to the inputs and outputs of the basic module heat generator or the heating circuit/domestic hot water module for implementing the following functions: - 1 heating/cooling circuit w/o mixer or - 1 heating/cooling circuit with mixer in each case incl. energy balancing Consisting of: - TopTronic® E module expansion - 3 pcs. contact sensor ALF/2P/4/T with length 4.0 m - complete plug set for module expansions - top hat rail with fitting accessories - ribbon cable for connecting the device bus to the controller module - connection set for connecting the - controller module to the mains voltage	6037 062

Notice
The continuous flow sensor set must be ordered as well.

Sets flow rate sensor
- Used in combination with the module expansion heat accounting or var. controller modules for heat metering
- Flow sensor supplies the current flow rate as well as the current temperature to the measuring point

Consisting of:
- flow rate sensor
- connection cable
- Rast5 plug for connecting to TopTronic® E

Plastic housing

Unit of measure	Connection	Flow rate l/min	
DN 8	G ¾″	0.9-15	6038 526
DN 10	G ¾″	1.8-32	6038 507
DN 15	G 1″	3.5-50	6038 508
DN 20	G 1¼″	5-85	6038 509
DN 25	G 1½″	9-150	6038 510

Brass housing

Unit of measure	Connection	Flow rate l/min	
DN 10	G 1″	2-40	6042 949
DN 32	G 1½″	14-240	6042 950

Further information
See “Hoval TopTronic® E module expansions” chapter

TopTronic® E controller modules, control/room control modules, HovalConnect, wall casing, sensor
see separate chapter

Technical data

TopTronic® E basic module heat generator

Type	TTE-WEZ
• Power supply max.	230 V AC +6/-10%
• Frequency	50-60 Hz
• Min. power consumption	0.8 W
• Max. power consumption	7.8 W
• Fuse	10 A slow-blow
Output (low voltage)	
• Electromechanical relays	7
Output (extra-low voltage)	
• Signal output PWM or 0-10 V	1
Switching capacity	
• Electromechanical relays	3 A
Input (low voltage)	
• Optocoupler input	1
Inputs (extra-low voltage)	
• Input 0-10 V	1
• Inputs sensors	4
• Inputs flow rate sensor	0
• Pulse input	1 (can be switched over to sensor)
Expansion (module expansion)	
• Max. number	1
Casing	
• Installation	Top hat rail mounting
• Dimensions (W x H x D) incl. plug	230 x 100 x 75 mm
• Ambient temperature (during operation)	0…50 °C
• Humidity (in operation)	20...80% RH, non-condensing
• Storage temperature	-20...60 °C
Bus system (Hoval CAN bus)	
• Capacity	max. 4 control modules / 3 control modules + 1 gateway
• Bus supply	yes
• Bus line	4-wire bus
• Bus length	twisted, shielded, max. 100 m
• Line cross-section	min. 0.5 mm²
• Cable type (recommended)	JY-(ST) 2 x 2 x 0.6
Other bus interfaces	Internal unit bus (master) RS485 OpenTherm (< 30 m)
Miscellaneous	
• Spring reserve	approx. 10 years, battery buffered
• Type of protection	IP 20
• Protection class	I – EN 60730
• Plug types	Rast 5 (coloured, coded)

Electrical connection

TopTronic® E basic module heat generator

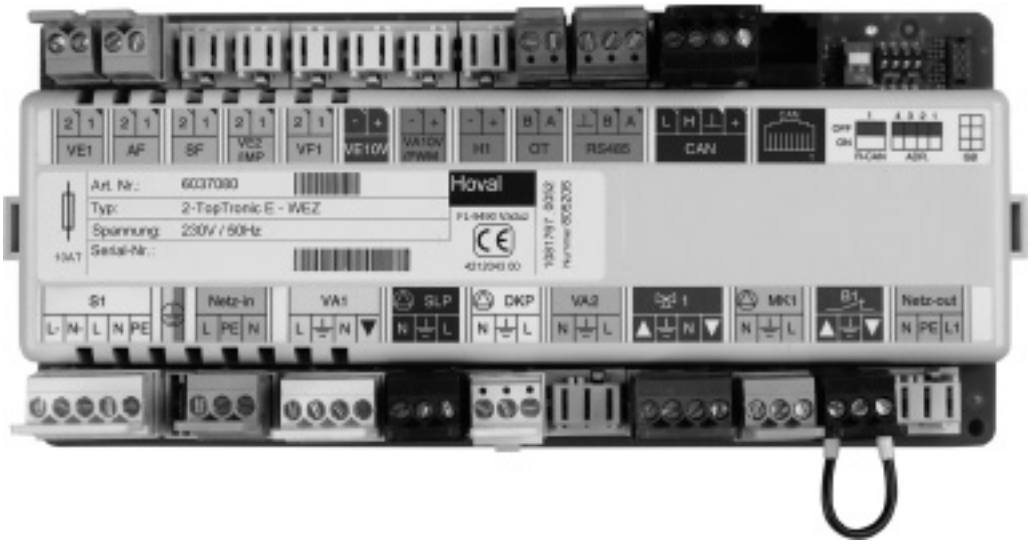

Description

TopTronic® E basic module district heating/fresh water

- Control unit for controlling district heating systems in non-communicative networks and the corresponding consumers with integrated control functions for:
  - Primary valve control
  - Cascade management
  - 1 heating circuit with mixer
  - 1 Heater circuit without mixer
  - 1 DHW loading circuit
  - Various additional functions
- Connection technology partially executed as plug-in screw terminals in coded Rast-5 design as well as conventional plug-in screw terminal technology
- Update capability of the controller software
- Time and date via integrated RTC, multi-day spring reserve via capacitor
- Fine fuse 5 A
- Controller module suitable for cabinet installation thanks to ability to install on DIN rail 35 x 15 x 2.2 mm or 35 x 7.5 x 2.2 mm
- Multiple expansion possibilities via Hoval CAN bus:
  - max. 16 controller modules in the bus system
  - Cascade connection with up to 8 different heat generators possible
  - Cascade connection with up to 10 different transfer stations possible
  - can be extended to up to 48 heating circuits

Notice
Operation of the controller module is generally via the TopTronic® E control module installed in the heat generator or in the station! If the control module is used without Hoval heat generator, the control module for operating the basic module district heating/fresh water and a wall casing must be ordered separately!

Inputs and outputs
- 230 V 3-point output for activating the primary valve or pilot control of a buffer storage solution
- 230 V 3-point output, e.g. for controlling the mixer
- 230V output, e.g. for controlling the circulating pump
- 230 V continuous phase, e.g. for supplying the heat meter
- Volt-free contact for outputting an alarm message
- 0-10 V input, e.g. for connecting to heating zone control systems or for integrating and additional heat generator via 0-10 V interface or switching contact (e.g.: solid-fuel boiler, etc.)
- 0-10 V or PWM output for controlling a variable-speed pump
- Variable inputs and outputs:
  - 230 V output, e.g. for controlling the direct circuit pump, feed pump
  - 230 V output, e.g. for controlling the buffer storage pump
  - 230 V output, e.g. for controlling the circulating pump
  - 2x analog inputs 4-20 mA/0-10 V for reference value specification
  - 1x analogue output 4-20 mA
- MBus interface for reading out heat meters (max. 16 MBus participants)

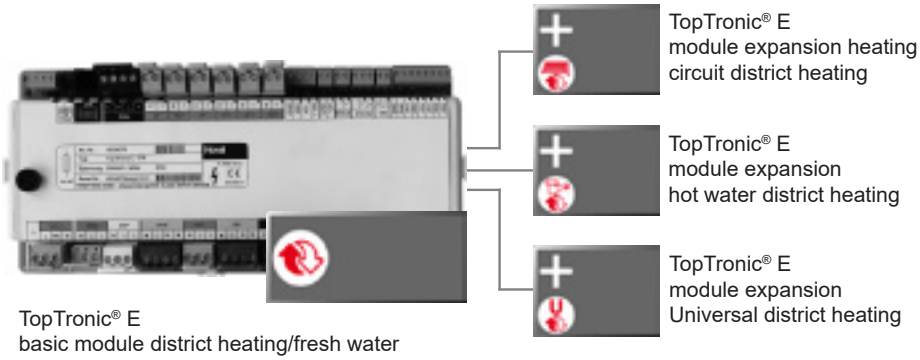

TopTronic® E
basic module district heating/fresh water

Max. 5 module expansions can be connected, of these, max. 3 module expansions heating circuit district heating

Option
- Can be expanded by max. 5 module expansions (expansion of the inputs/outputs), of these, max. 3 module expansions heating circuit district heating:
  - Module expansion heating circuit district heating (1 heating circuit with/without mixer) or
  - Module expansion hot water district heating (1 hot water loading circuit) or
  - Module expansion Universal district heating (various special functions)

Functions
- Weather-supported flow temperature controller for heating operation with or without room influence taking account of building characteristics and switch-on optimisation
- Optimisation of the heating circuit flow temperatures and improvement in the room climate taking account of the weather forecast (only possible in combination with HovalConnect)
- Different basic programs (week programs, economy mode, holiday until, etc.) can be defined for each heating circuit plus ability to activate manual operation (construction site mode)
- Separate switching time programs for each heating circuit as well as for hot water with
  - 2 individually preset week programs comprising
    - 5 different - individually preset - day programs with
    - 6 switching points per day
- Different temperatures can be set for each switching cycle
- Various functions for hot water:
  - Selection of different basic programs (week programs, economy mode, holiday until, etc.)
  - various operating modes (e.g. accumulator priority or parallel mode)
  - Buffer storage circuit on the primary or secondary side
  - adjustable loading criteria (e.g.: adjustable loading times, undershooting the minimum nominal value, etc.)
  - adjustable switch-off criteria (e.g. achieving the setpoint valve, achieving the lower sensor setpoint value, etc.)
  - adjustable loading block (if the loading flow temperature is too low, the setpoint temperature is not reached, differential temperature-dependent solar circuit control)
- Definable switching times for circulating pump control
- Automatic changeover of summer/winter time
- Heating characteristic adaptation possible for each individual heating circuit
- Screed drying function for underfloor heating
- Requirement contact for constant requirements (ventilation, swimming pool, etc.)
- Modem switching function
- Pump anti-blocking protection
- Frost protection function
- Cascade management that is activated following the combination with other basic modules (up to 8 heat generators)
- Cascade connection of 10 district heating stations in master/slave combination possible
- Definition of priorities for switching over between heating and hot water operation
- Operating hours and pulse counter
- Electronic output power limit by heat meter
- Outside temperature-dependent return limitation
- Reduction characteristic curve for network protection
- Integrated event memory
- Buffer storage circuit can be connected on the primary or secondary side of the heat exchanger
- Warm water input circuit
- Self-test with error diagnosis and error memory
- Relay test for each output can be activated separately
- Zero passage circuit
  The TopTronic® E basic module district heating/fresh water has a special zero passage circuit of the fitted relays. This is used for reducing the load on the switching contacts, and thus increases the service life of the relays
- Functions that can be implemented with module expansions:
  - Heating circuit without mixer
  - Heating circuit with mixer or
  - hot water loading circuits
  - Various additional functions

Notice
Depending on the complexity, module expansions are required for using the listed functions (max. 5 module expansions can be connected)!

Description

Use

- Control of district heating stations or other transfer stations (buffer storage solutions) in a very wide power range
- Control for multiple heat generator/district heating systems by integrated cascade management:
  - 10 district heating stations by master/slave connection or
  - 8 different heat generators
- For room heating and hot water charging circuit
- For optimisation of the room climate by control algorithm taking account of the weather forecast (only possible in combination with HovalConnect)
- Upstream control for technical systems such as ventilation, air conditioning systems, etc. or also for heating zone control systems
- For decentralised assembly - remote from the control module - directly at the sensors and actuators:
  - Installation in wall casing/control panel
  - Connection to the operating unit via Hoval CAN bus
- With significant expansion capability by controller modules via the Hoval CAN bus
- For flexible integration of heat generators in modern communication systems via different interfaces
- For remote connection of heat generators via HovalConnect

Delivery

- TopTronic® E basic module district heating/fresh water
- 2x mounting clips for DIN rail attachment
- 1x outdoor sensor AF/1.1P/K
- 1x immersion sensor TF/1.1P/2.5/6T, L = 2.5 m
- 1x contact sensor ALF/1.1P/2.5/T, L = 2.5 m
- Complete plug set for district heating module

Notice
The supplementary plug set may have to be ordered to implement functions differing from the standard!

Description

Functions that can be implemented

TopTronic® E basic module district heating/fresh water and district heating com

TTE-FW/ FW com	1 heat exchanger	1 direct heating circuit	1 mixed heating circuit	2 mixed heating circuit	1 DHW charging circuit direct primary	1 DHW charging circuit direct secondary	1 DHW mixing charging circuit secondary
Hydr. 2	x	x					
Hydr. 4	x	x			x		
Hydr. 5	x		x		x		
Hydr. 9	x	x					x
Hydr. 11	x		x				x
Hydr. 12	x	x				x	
Hydr. 13	x		x			x	
Hydr. 15	x	x	x				
Hydr. 25	x	x	x			x	
Hydr. 26	x	x	x				x
Hydr. 27	x		x	x		x	
Hydr. 28	x		x	x			x

2

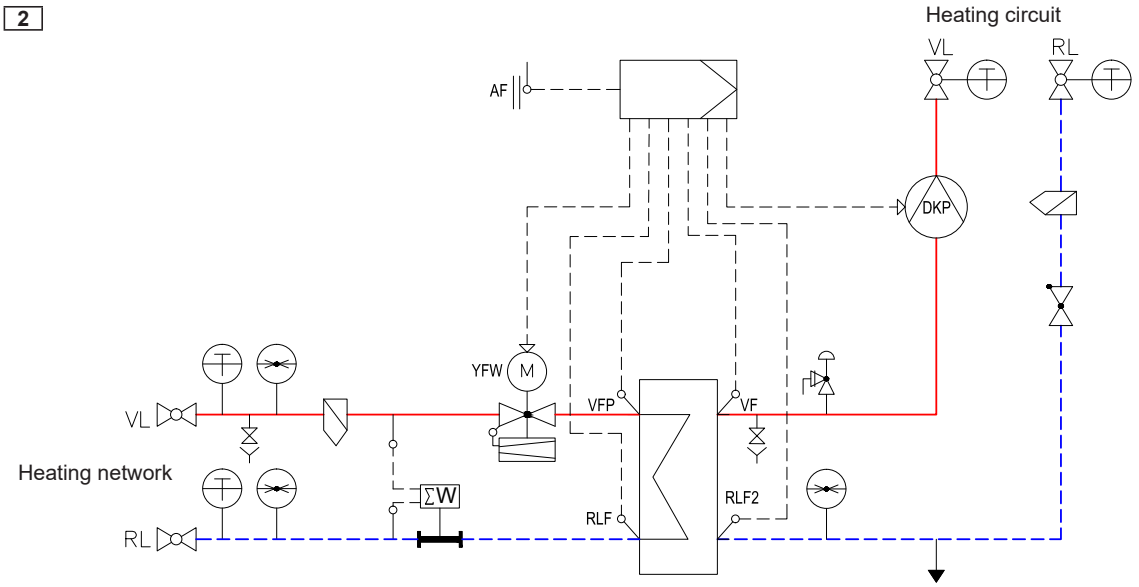

4

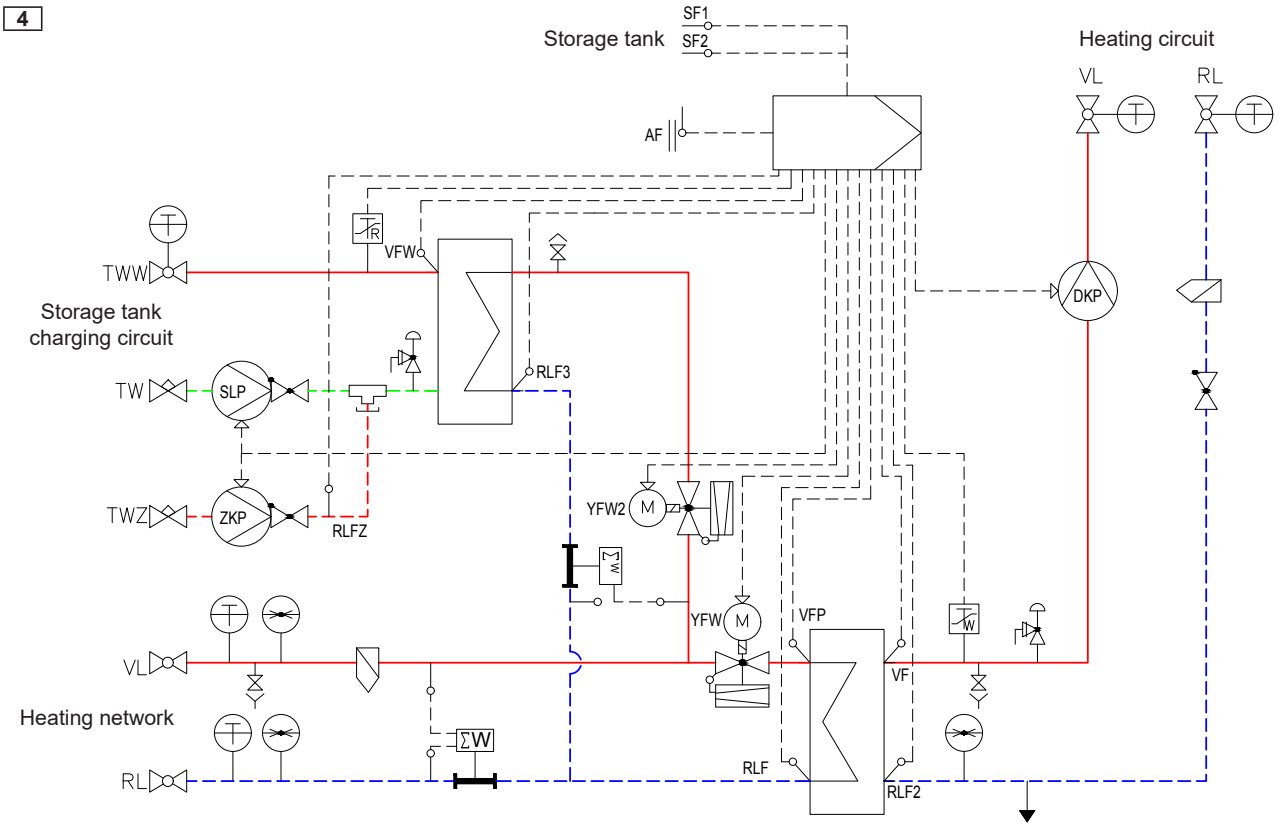

Description

5

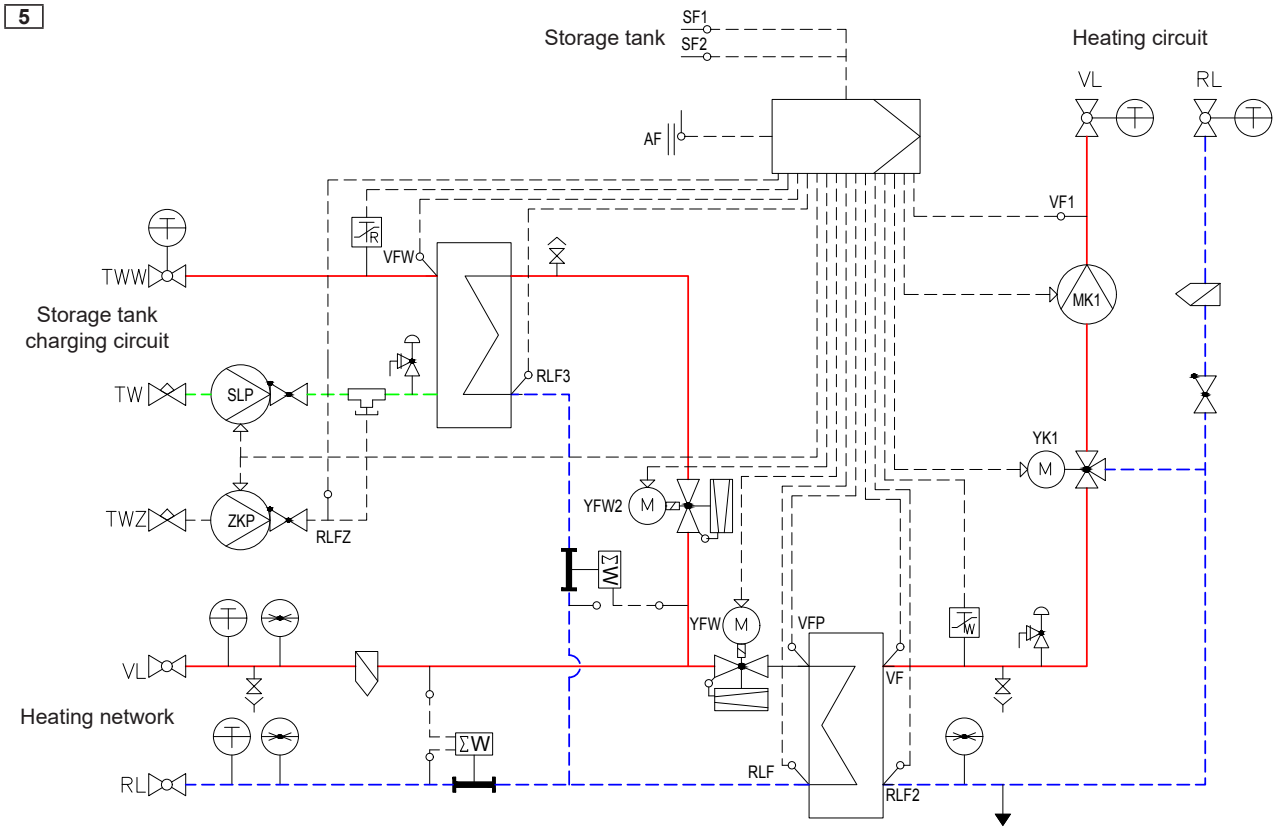

9

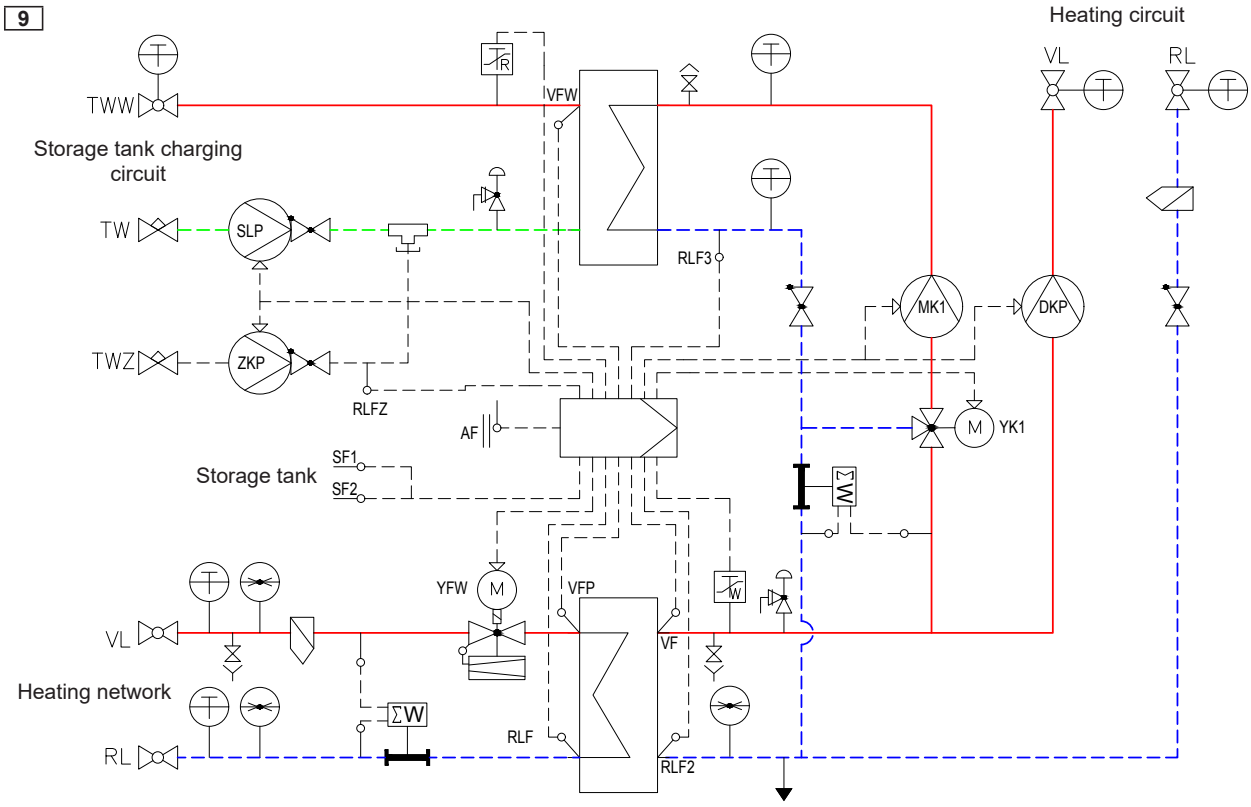

Description

11

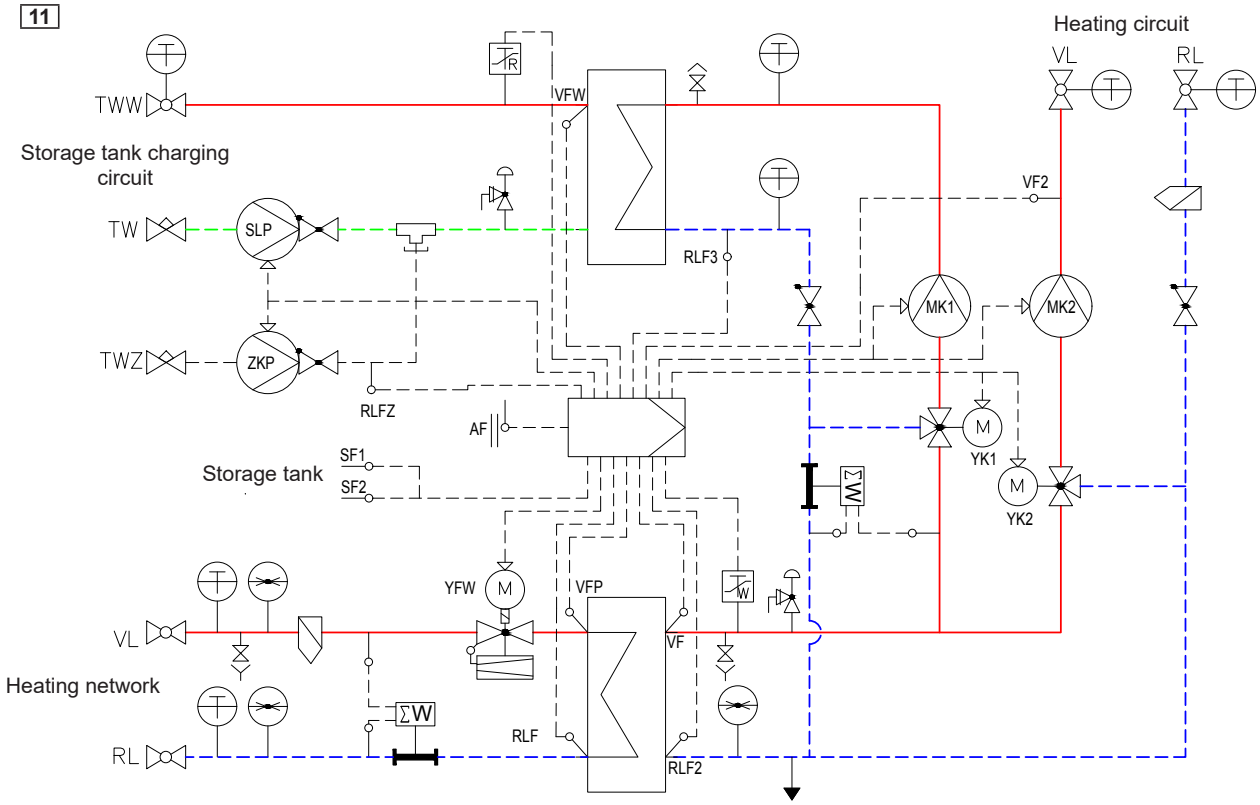

12

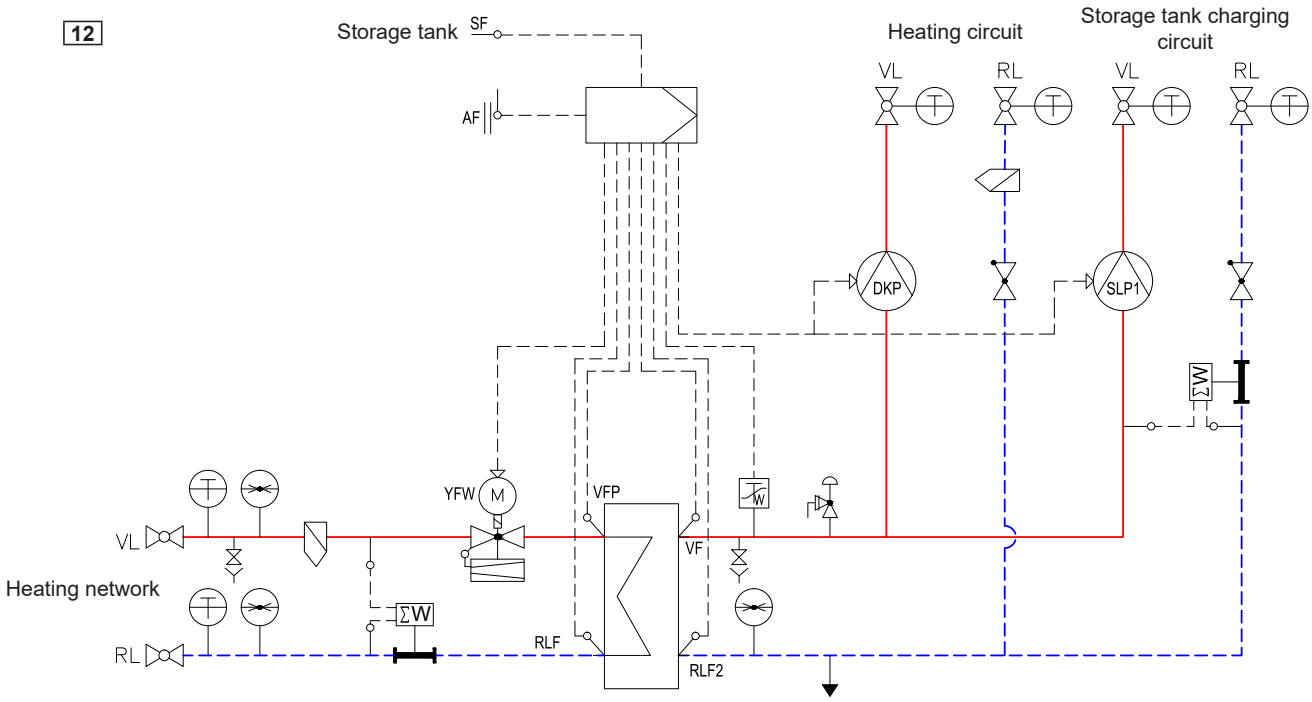

Description

13

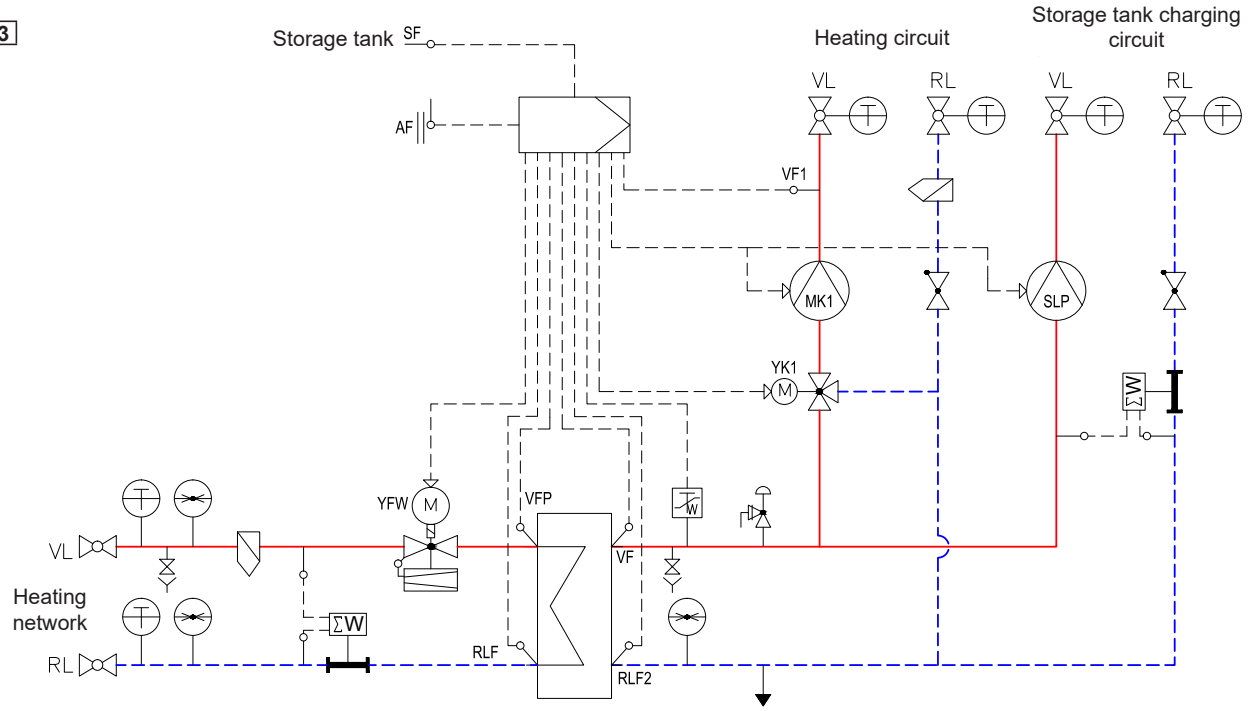

15

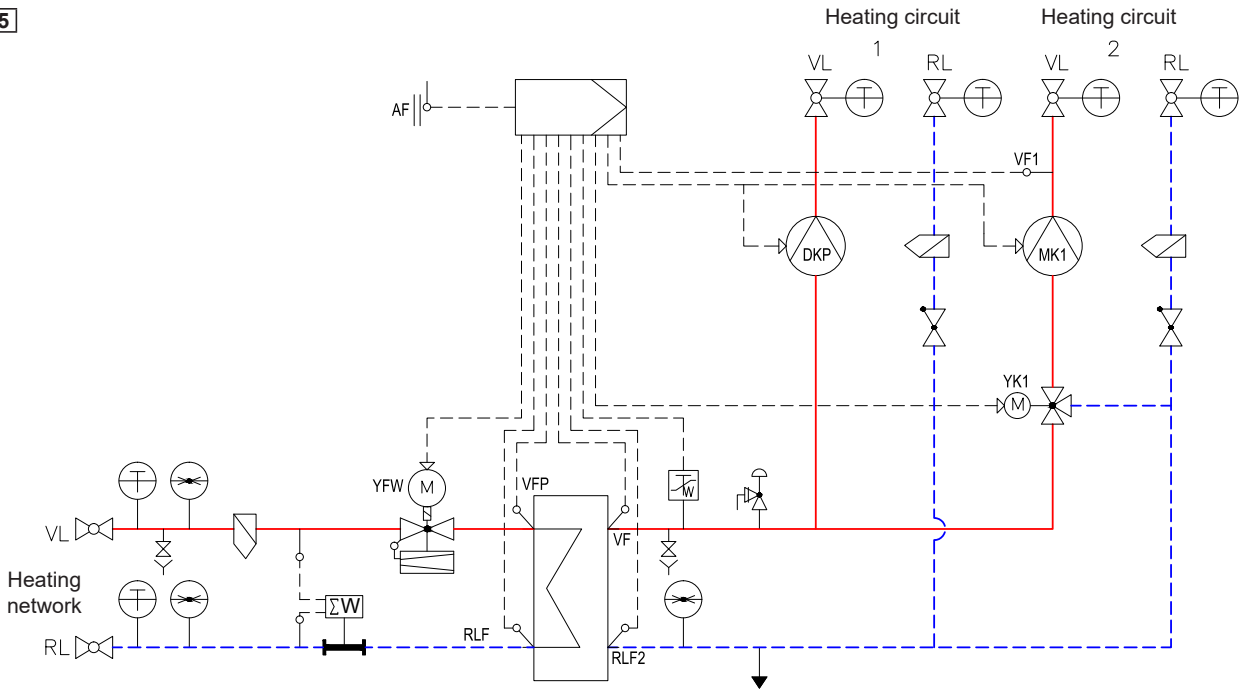

Description

25

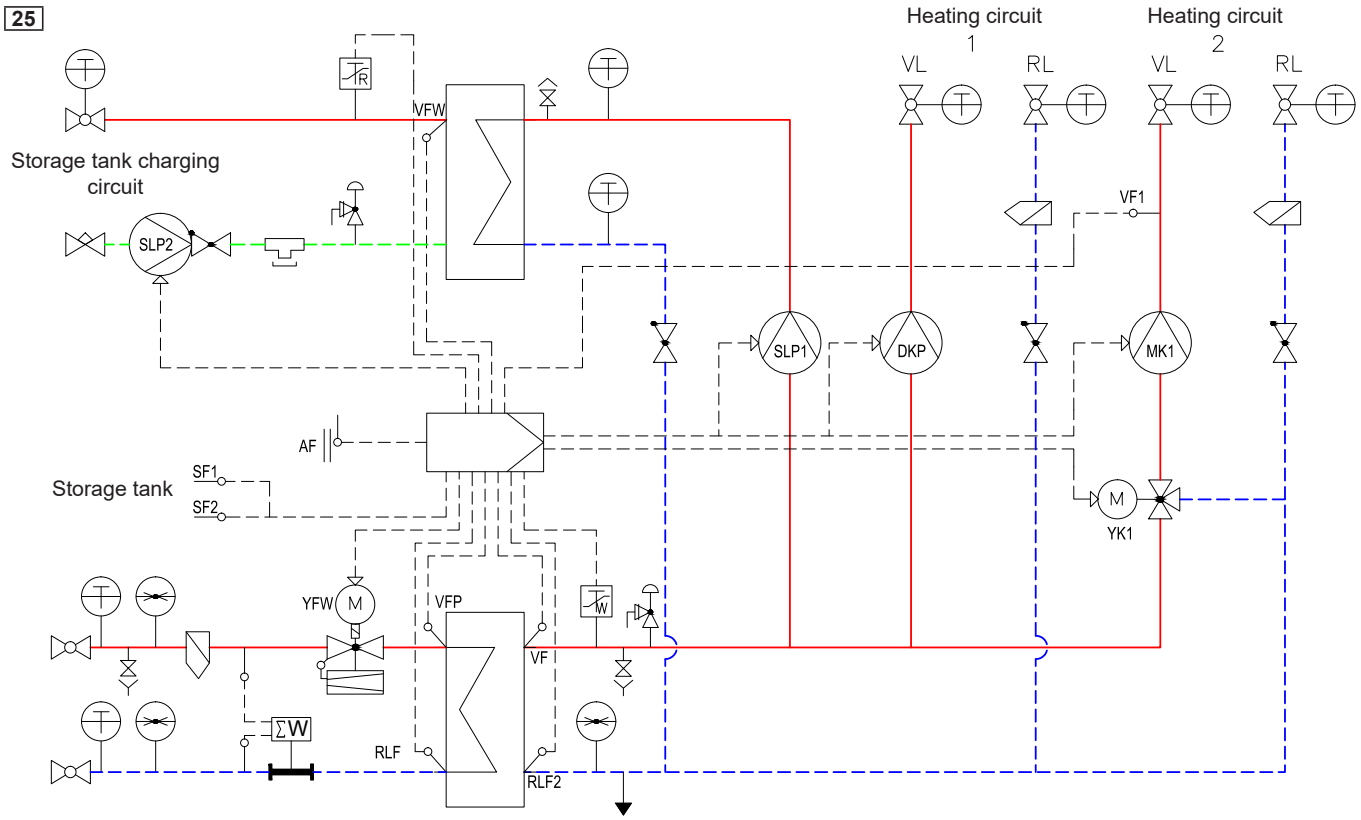

26

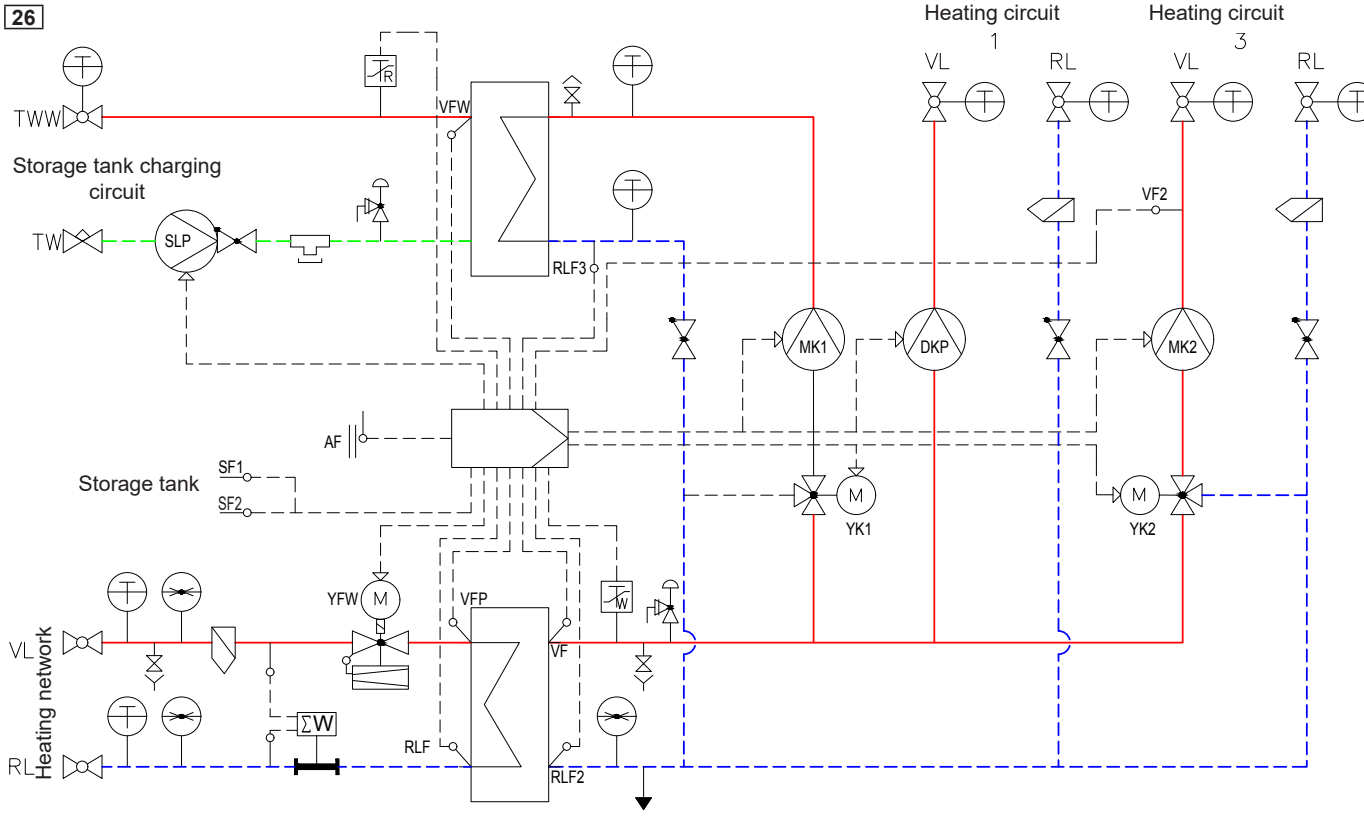

Description

27

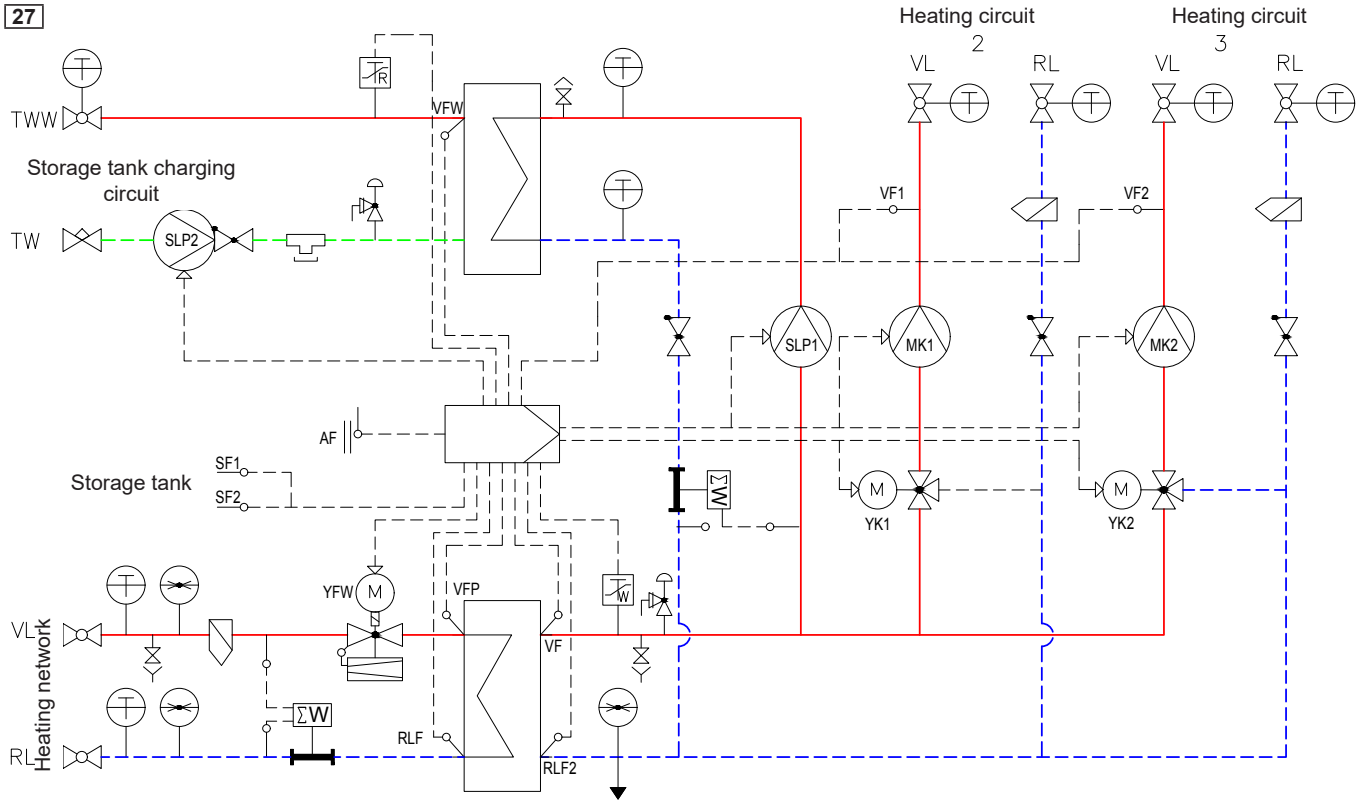

28

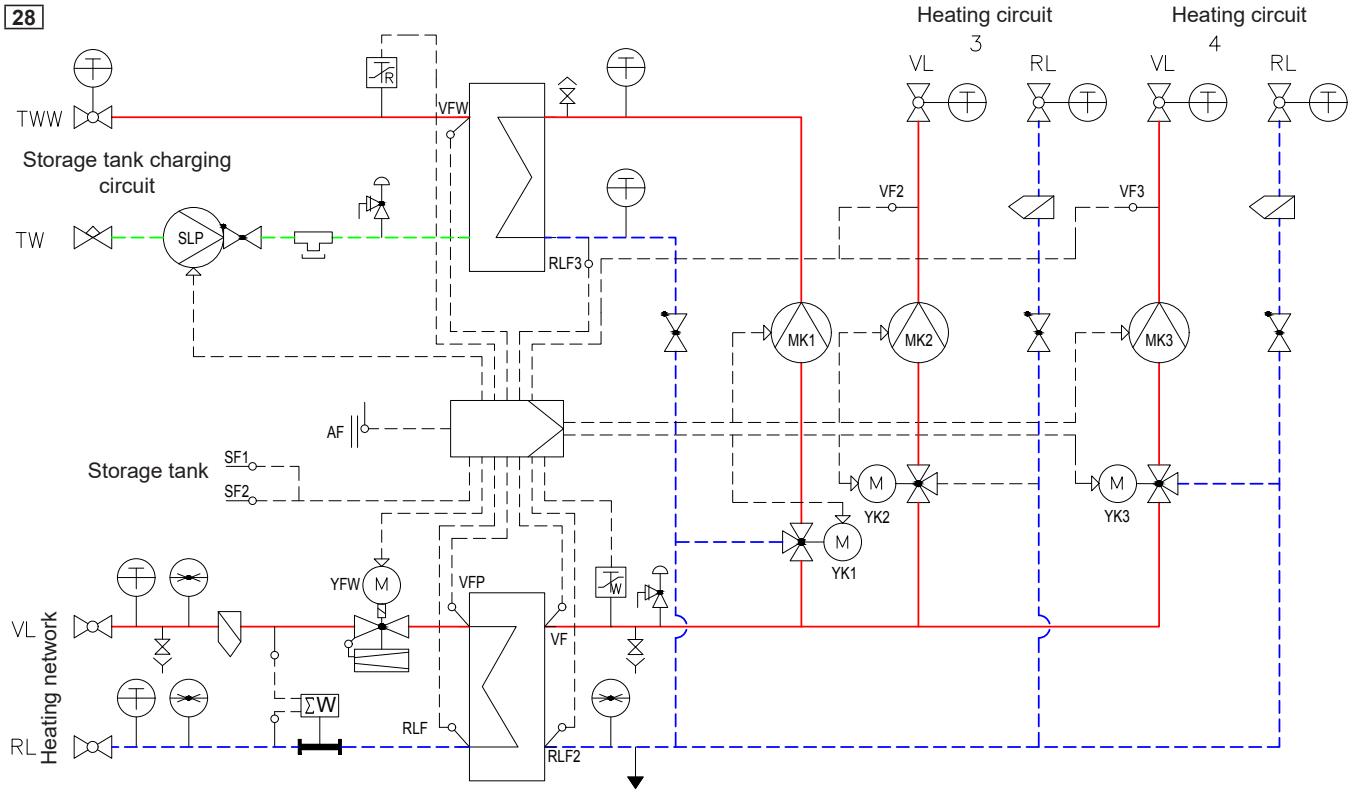

Part No.

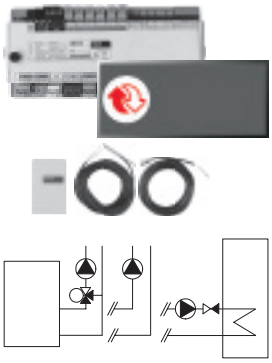

TopTronic® E basic module district heating/fresh water	Part No.
TopTronic® E basic module district heating/fresh water TTE-FW Controller mod. for controlling district heating systems in non-communicative networks and the corresponding consumers with integrated control functions for: - primary valve control - cascade management - 1 heating circuit without mixer - 1 heating circuit with mixer - 1 hot water loading circuit - various additional functions Consisting of: - TopTronic® E basic module district heating/ fresh water incl. 2 pcs. mounting clips for top hat rail attachment - 1 pce. outdoor sensor AF/1.1P/K - 1 pce. immersion sensor TF/1.1P/2.5/6T, L = 2.5 m - 1 pce. contact sensor ALF/1.1P/2.5/T, L = 2.5 m - complete plug set for DH module	6034 569

Notice
If the basic module is used without Hoval heat generator then a TopTronic® E control module must be ordered separately!

Notice
Depending on the complexity, module expansions are required for using the listed functions (max. 5 module expansions can be connected)!

TopTronic® E district heating controller set	
TopTronic® E district heating controller set Consisting of: - TopTronic® E basic module district heating/ fresh water - TopTronic® E control module black - outdoor sensor AF/1.1P/K - immersion sensor TF/1.1P/2.5/6T, L = 2.5 m - contact sensor ALF/1.1P/2.5/T, L = 2.5 m - plug set for DH module	6038 523

Part No.

	TopTronic® E module expansions for TopTronic® E basic module district heating/fresh water	Part No.
	Max. 5 module expansions can be connected, of these, max. 3 module expansions heating circuit district heating	
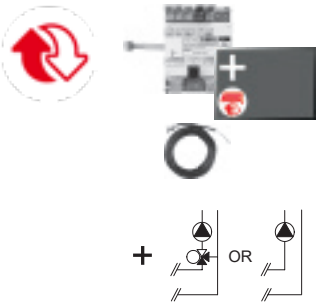	**TopTronic® E module expansion heating circuit district heating TTE-FE HK FW** Expansion to the inputs and outputs of the basic module district heating/fresh water or basic module district heating com for carrying out the following functions: - 1 heating/cooling circuit w/o mixer or - 1 heating/cooling circuit with mixer Consisting of: - TopTronic® E module expansion district heating - top hat rail with fitting accessories - ribbon cable for connecting the device bus to the controller module connection set for connecting the controller module to the mains voltage - 1 pce. contact sensor ALF/1.1P/5/T with length 2.5 m - complete plug set for module expansions district heating	6038 119
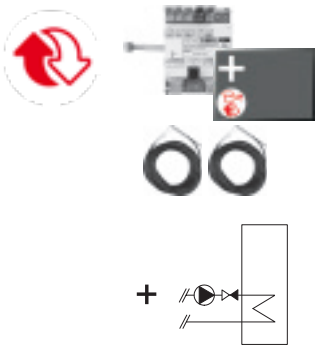	**TopTronic® E module expansion hot water district heating TTE-FE WW FW** Expansion to the inputs and outputs of the basic module district heating/fresh water or basic module district heating com for implementing a hot water circuit Consisting of: - TopTronic® E module expansion district heating - top hat rail with fitting accessories - ribbon cable for connecting the device bus to the controller module - connection set for connecting the controller module to the mains voltage - 2 pcs. immersion sensor TF/1.1/2.5/T with length 2.5 m - complete plug set for module expansions district heating	6038 120
	**TopTronic® E module expansion universal district heating TTE-FE UNI FW** Expansion to the inputs and outputs of the basic module district heating/fresh water or basic module district heating com for carrying out the following functions Consisting of: - TopTronic® E module expansion district heating - top hat rail with fitting accessories - ribbon cable for connecting the device bus to the controller module - connection set for connecting the controller module to the mains voltage - complete plug set for module expansions district heating	6038 117
	Further information See “Hoval TopTronic® E module expansions district heating” chapter	

Notice
Refer to the Hoval System Technology to find which functions and hydraulic arrangements can be implemented.

TopTronic® E controller modules, control/room control modules, HovalConnect, wall casing, sensor
see separate chapter

Technical data

TopTronic® E basic module district heating/fresh water

Type	TTE-FW
• Power supply max.	230 V AC +6/-10 %
• Frequency	50-60 Hz
• Min. power consumption	0.6 W
• Max. power consumption	5.4 W
• Fuse	H5.0AF
Output (low voltage)	
• Electromechanical relays	9
Output (extra-low voltage)	
• Signal output PWM or 0-10 V	4
Switching capacity	
• Electromechanical relays	5 A
Input (low voltage)	
• Optocoupler input	0
Inputs (extra-low voltage)	
• Input 0-10 V	4
• Inputs sensors	11
• Inputs flow rate sensor	0
• Pulse input	1
Expansion (module expansion)	
• Max. number (of these, max. 3 module expansions heating circuit district heating)	5
Casing	
• Installation	Top hat rail mounting
• Dimensions (W x H x D) incl. plug	250 x 120 x 75 mm
• Ambient temperature (during operation)	0…50 °C
• Humidity (in operation)	20...80 % RH, non-condensing
• Storage temperature	-20...60 °C
Bus system (Hoval CAN bus)	
• Capacity	max. 4 control modules / 3 control modules + 1 gateway
• Bus supply	yes
• Bus line	4-wire bus
• Bus length	twisted, shielded, max. 100 m
• Line cross-section	min. 0.5 mm²
• Cable type (recommended)	JY-(ST) 2 x 2 x 0.6
Other bus interfaces	Internal unit bus (master) Mbus (master) RS485
Miscellaneous	
• Spring reserve	approx. 96 hours (supercapacitor)
• Type of protection	IP 20
• Protection class	I – EN 60730
• Plug types	Rast 5 (coloured, coded), alternative plug-in terminal technology

Electrical connection

TopTronic® E basic module district heating/fresh water

Description

TopTronic® E basic module district heating com

- Control unit for controlling district heating systems in communicative networks (communication interface for management system) and the corresponding consumers with integrated control functions for
  - Primary valve control
  - Cascade management
  - 1 heating circuit with mixer
  - 1 heating circuit without mixer
  - 1 DHW charging circuit
  - Various additional functions
- Connection technology partially executed as plug-in screw terminals in coded Rast5 design as well as conventional plug-in screw terminal technology
- Update capability of the controller software
- Time and date via integrated RTC, multi-day spring reserve via capacitor
- Microfuse 5 A
- Controller module suitable for cabinet installation thanks to ability to install on DIN rail 35 x 15 x 2.2 mm or 35 x 7.5 x 2.2 mm
- Multiple expansion possibilities via Hoval CAN bus:
  - max. 16 controller modules in the bus system
  - Cascade connection with up to 8 different heat generators possible
  - Cascade connection with up to 10 different transfer stations possible
  - can be extended to up to 48 heating circuits

Notice
Operation of the controller module is generally via the TopTronic® E control module installed in the heat generator!
If the controller module is used without Hoval heat generator then the control module for operating the basic module district heating com and a wall casing with control module cut-out must be ordered separately!

Inputs and outputs

- 230V 3-point output for activating the primary valve or pilot control of a buffer storage solution
- 230V 3-point output, e.g. for controlling the mixer
- 230V output, e.g. for controlling the circulating pump
- 230V continuous phase, e.g. for supplying the heat meter
- Volt-free contact for outputting an alarm message
- 0-10V input, e.g. for connecting to heating zone control systems or for integrating and additional heat generator via 0-10V interface or switching contact (e.g.: solid-fuel boiler, etc.)
- 0-10V or PWM output for controlling a variable-speed pump
- Variable inputs and outputs:
  - 230V output, e.g. for controlling the direct circuit pump, feed pump
  - 230V output, e.g. for controlling the storage tank charging pump
  - 230V output, e.g. for controlling the circulating pump
  - 2x analog inputs 4-20 mA/0-10 V for reference value specification
  - 1x analogue output 4-20 mA
- MBus interface for reading out heat meters (max. 16 MBus participants)
- LON bus interface for communication with the HovalSupervisor control system

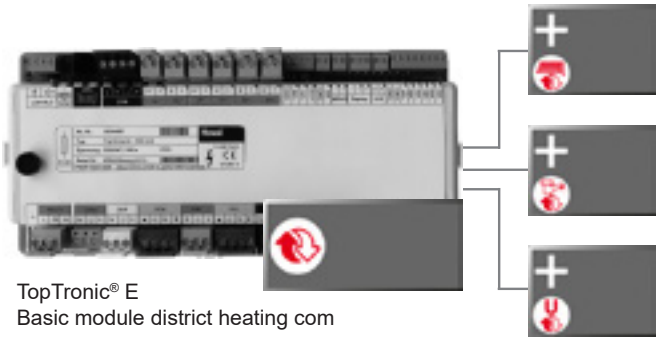

TopTronic® E
Basic module district heating com

TopTronic® E
module expansion
Heating circuit district heating

TopTronic® E
Module expansion
hot water district heating

TopTronic® E
module expansion
Universal district heating

Notice
Max. 5 module expansions can be connected to the TopTronic® E basic module, thereof max. 3 module expansions for heating circuits district heating (i.e. max. 4 mixer circuits, 1 direct heating circuit). However, a maximum of 4 control modules can be installed per basic module district heating. This means that not every heating circuit can be equipped with a control module! Room control is possible only for the direct and 2 mixed heating circuits. In the master/slave group, an additional mixer circuit with room control function can be used on the slave controller. If further heating circuits with control modules are required, heating circuit/hot water modules can also be combined with the basic module district heating (max. 48 heating circuits).

Option

- Can be expanded by max. 5 module expansions (expansion of the inputs/outputs), thereof max. 3 module expansions heating circuit district heating:
  - Module expansion heating circuit district heating (1 heating circuit with/without mixer) or
  - Module expansion hot water district heating (1 hot water loading circuit) or
  - Module expansion Universal district heating (various special functions)
- Can be expanded with various accessories:
  - Ethernet connection TTE-FW com
  - Repeater TTE-FW com LON bus
  - Router TTE-FW com CAN bus
  - Data socket 13-pin TTE-FW com LON bus and lightning protection
  - various software licences for HovalSupervisor
  - various services for HovalSupervisor

Functions

- Update capability of the controller software via central data network
- 100 % parameter setting capability of the complete controller via the HovalSupervisor central management system
- Weather-supported flow temperature controller for heating operation with or without room influence taking account of building characteristics and switch-on optimisation
- Optimisation of the heating circuit flow temperatures and improvement in the room climate taking account of the weather forecast (only possible in combination with HovalConnect)
- Different basic programs (week programs, eco mode, holiday, etc.) can be defined for each heating circuit plus ability to activate manual operation (construction site mode)
- Separate switching time programs for each heating circuit as well as for hot water with
  - 2 individually preset week programs comprising
    - 5 different - individually preset - day programs with
    - 6 switching points per day
- Different temperatures can be set for each switching cycle
- Various functions for hot water:
  - Selection of different basic programs (week programs, eco mode, holiday, etc.)
  - various operating modes (e.g. accumulator priority or parallel mode)
  - Buffer storage circuit on the primary or secondary side
  - adjustable loading criteria (e.g.: adjustable loading times, undershooting the minimum nominal value, etc.)
  - adjustable switch-off criteria (e.g. achieving the setpoint value, achieving the lower sensor setpoint value, etc.)
  - adjustable loading block (if the loading flow temperature is too low, the setpoint temperature is not reached, differential temperature-dependent solar circuit control)
- Definable switching times for circulating pump control
- Automatic changeover of summer/winter time
- Heating characteristic adaptation possible for each individual heating circuit
- Screed drying function for underfloor heating
- Requirement contact for constant requirements (ventilation, swimming pool, ...)
- Modem switching function
- Pump anti-blocking protection
- Frost protection function
- Cascade management that is activated following the combination with other basic modules (up to 8 heat generators)
- Cascade connection of 10 district heating stations in master/slave combination possible
- Definition of priorities for switching over between heating and hot water operation
- Operating hours and pulse counter
- Electronic output power limit by heat meter
- Outdoor temperature-dependent return limitation
- Reduction characteristic curve for network protection
- Integrated event memory
- Buffer storage circuit can be connected on the primary or secondary side of the heat exchanger
- Warm water input circuit
- Self-test with error diagnosis and error memory

Description

- Relay test for each output can be activated separately
- Zero passage circuit
  The TopTronic® E basic module district heating com has a special zero passage circuit of the fitted relays. This is used for reducing the load on the switching contacts, and thus increases the service life of the relays.
- Functions that can be implemented with module expansions:
  - heating circuit without mixer
  - heating circuit with mixer or
  - hot water charging circuits
  - various additional functions

Notice
Depending on the complexity, module expansions are required for using the listed functions (max. 5 module expansions can be connected)!

Application
- Control of district heating stations or other transfer stations (buffer storage solutions) in a very wide power range
- Control for multiple heat generator/district heating systems by integrated cascade management:
  - 10 district heating stations by master/slave connection or
  - 8 different heat generators
- Flexible connection to the management system
- For room heating and hot water charging circuit
- For optimisation of the room climate by control algorithm taking account of the weather forecast (only possible in combination with HovalConnect)
- Upstream control for technical systems such as ventilation, air conditioning systems, etc. or also for heating zone control systems
- For decentralised assembly - remote from the control module - directly at the sensors and actuators:
  - Installation in wall casing/control panel
  - Connection to the operating unit via Hoval CAN bus
- With significant expansion capability by controller modules via the Hoval CAN bus
- For flexible integration of heat generators in modern communication systems via different interfaces
- For remote connection of heat generators via HovalConnect

Delivery
- TopTronic® E basic module district heating com
- 2x mounting clips for DIN rail attachment
- 1x outdoor sensor AF/1.1P/K
- 1x immersion sensor TF/1.1P/2.5/6T, L = 2.5 m
- 1x contact sensor ALF/1.1P/2.5/T, L = 2.5 m
- Complete plug set for district heating module

Functions that can be implemented
see TopTronic® E basic module district heating/fresh water/hydraulic applications

Part No.

TopTronic® E basic module District heating com	Part No.
TopTronic® E basic module district heating com TTE-FW com Control unit for controlling district heating systems in communicative networks (communication interface for management system) and the corresponding consumers with integrated control functions for - Primary valve control - Cascade management - 1 heating circuit without mixer - 1 heating circuit with mixer - 1 DHW charging circuit - Various additional functions Consisting of: - TopTronic® E basic module district heating communicative incl. 2x mounting clips for DIN rail attachment - 1x outdoor sensor AF/1.1P/K - 1x immersion sensor TF/1.1P/2.5/6T, L = 2.5 m - 1x contact sensor ALF/1.1P/2.5/T, L = 2.5 m - Complete plug set for district heating module	6034 570

Notice
If the basic module is used without Hoval heat generator then a TopTronic® E control module must be ordered separately!

Notice
Depending on the complexity, module expansions are required for using the listed functions (max. 5 module expansions can be connected)!

TopTronic® E district heating controller set	
Communicative district heating controller set TopTronic® E Consisting of: - TopTronic® E basic module district heating com - TopTronic® E control module black - 1x outdoor sensor AF/1.1P/K - 1x immersion sensor TF/1.1P/2.5/6T, L = 2.5 m - 1x contact sensor ALF/1.1P/2.5/T, L = 2.5 m - Plug set for district heating module	6038 524

Part No.

TopTronic® E module expansions for TopTronic® E basic module district heating com	Part No.
Max. 5 module expansions can be connected, thereof max. 3 module expansions heating circuit district heating	
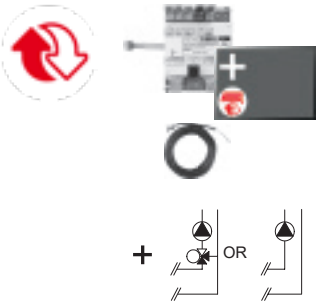 **TopTronic® E module expansion Heating circuit district heating TTE-FE HK FW** Expansion to the inputs and outputs of the basic module district heating/fresh water or basic module district heating com for implementing the following functions: - 1 heating/cooling circuit without mixer or - 1 heating/cooling circuit with mixer Consisting of: - TopTronic® E module expansion district heating - DIN rail with fitting accessories - Ribbon cable for connecting the device bus to the controller module - Connection set for connecting the controller module to the mains voltage - 1x contact sensor ALF/1.1P/2.5/T, L = 2.5 m - Complete plug set for module expansions district heating	6038 119
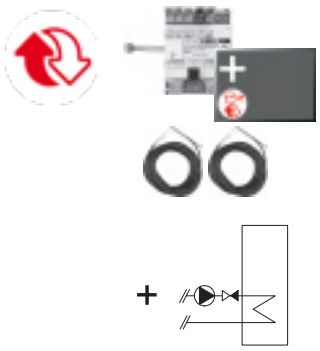 **TopTronic® E module expansion Domestic hot water district heating TTE-FE WW FW** Expansion to the inputs and outputs of the basic module district heating/fresh water or the basic module district heating com for implementing a hot water circuit Consisting of: - TopTronic® E module expansion district heating - DIN rail with fitting accessories - Ribbon cable for connecting the device bus to the controller module - Connection set for connecting the controller module to the mains voltage - 2x immersion sensor TF/1.1P/2.5/6T, L = 2.5 m - Complete plug set for module expansions district heating	6038 120
 **TopTronic® E module expansion Universal district heating TTE-FE UNI FW** Expansion to the inputs and outputs of a basic module district heating/fresh water or a basic module district heating com for implementing various functions Consisting of: - TopTronic® E module expansion district heating - DIN rail with fitting accessories - Ribbon cable for connecting the device bus to the controller module - Connection set for connecting the controller module to the mains voltage - Complete plug set for module expansions district heating	6038 117

Notice
Refer to the Hoval System Technology to find which functions and hydraulic arrangements can be implemented.

Further information
See “Hoval TopTronic® E module expansions” chapter

Part No.

	Part No.
 **Ethernet connection TopTronic® E district heating com** - Communication module expansion for TopTronic® E basic module district heating com - TCP/IP interface for communication with the HovalSupervisor management system - Top hat rail mounting directly adjacent to the basic module - Connection to the basic module via ribbon cable - Dimensions: 46 x 125 x 51 (L x W x H)	2044 995
 **Repeater TopTronic® E district heating com LonBus** - Repeater as electrical signal booster of the LON bus network - Used for increasing the range of the signal when there are long distances between the control centre and the individual TopTronic® E basic module district heating com controller modules - Positioning of the repeaters depending on the data network (routing type, cable type, length, etc.) at different points in the network - Electrical power supply 230 VAC - Dimensions: 71 x 92 x 60 (L x W x H) **Notice** After 5 repeaters, a router must be used for boosting the signal. Article on request.	2045 034
 **Router TopTronic® E district heating com - CAN bus** - Interface between the Hoval LONBus network and HovalSupervisor - Interface between the Hoval TCP/IP network and HovalSupervisor - Serves as a physical interface between the data stream of the district heating network and e.g amaster computer with TCP/IP interface - Possibility of connecting differential pressure sensors variable inputs 0 - 10 V or 0/4 - 20 mA - Router can be installed in control panel with DIN-rail mounting - Temp. and pressure control f. up to five strands or 5 heating circuits - Dimensions: 355 x 120 x 75 (L x W x H) TopTronic® E control module black for operating the router (optional) and mating connector set must be ordered separately.	6047 303

Part No.

	Part No.
Data socket TopTronic® E district heating com LonBus and lightning protection - Data socket for connecting the telecommunication cable at the building connection - Connection must be made according to the appropriate applicable regulations - Data sockets must also be installed with dummy connections - 1 pce. input block 13-pin - 2 pcs. output blocks each 13-pin - 2 pcs. 3-pin outputs to controller and repeater - Damp room socket IP55, dimensions: 180 x 140 x 75 (L x W x H), incl. 10 stepped nipples	2061 738

TopTronic® E controller modules, Room control modules, HovalConnect, wall casings, sensors
see separate chapters

Technical data

TopTronic® E basic module district heating com

Type	TTE-FW com
• Power supply max.	230 V AC +6/-10 %
• Frequency	50-60 Hz
• Min. power consumption	0.7 W
• Max. power consumption	5.4 W
• Fuse	H5.0AF
Output (low voltage)	
• Electromechanical relays	9
Output (extra-low voltage)	
• Signal output PWM or 0-10V	4
Switching capacity	
• Electromechanical relays	5A
Input (low voltage)	
• Optocoupler input	0
Inputs (extra-low voltage)	
• Input 0-10 V	4
• Inputs sensors	11
• Flow rate sensor inputs	0
• Pulse input	1
Expansion (module expansion)	
• Max. number (thereof max. 3 module expansions heating circuit district heating)	5
Casing	
• Installation	Top hat rail mounting
• Dimensions (W x H x D) incl. plug	250 x 120 x 75 mm
• Ambient temperature (during operation)	0 … 50 °C
• Humidity (in operation)	20...80% RH, non-condensing
• Storage temperature	-20...60 °C
Bus system (Hoval CAN bus)	
• Capacity	Max. 4 control modules / 3 control modules + 1 gateway
• Bus supply	Yes
• Bus line	4-wire bus
• Bus length	Twisted, shielded, max. 100 m
• Line cross-section	Min. 0.5 mm²
• Cable type (recommended)	JY-(ST) 2 x 2 x 0.6
Other bus interfaces	Internal unit bus (master) Mbus (master) LON (slave, encrypted) RS485 TCP/IP optional
Miscellaneous	
• Spring reserve	Approx. 96 hours (supercapacitor)
• Type of protection	IP 20
• Protection class	I – EN 60730
• Plug types	Rast5 (coloured, coded), alternative plug-in terminal technology

Electrical connection

TopTronic® E basic module district heating com

Description

TopTronic® E heating circuit/ hot water module

- Control unit for controlling consumers with integrated control functions for:
  - 1 heating/cooling circuit with mixer or
  - 1 heating/cooling circuit without mixer or
  - 1 DHW loading circuit
  - Various additional functions
- Connection technology executed as plug-in screw terminals in coded RAST-5 design
- Update capability of the controller software
- Time and date via integrated RTC, multi-year spring reserve
- Fine fuse 10 A
- Control unit suitable for cabinet installation thanks to ability to install on DIN rail 35 x 15 x 2.2 mm
- Expansion possibilities via Hoval CAN bus:
  - max. 16 controller modules in the bus system
  - max. 16 heating circuit/hot water modules in the bus system

Notice
Operation of the controller module is generally via the TopTronic® E control module installed in the heat generator!
If the control module is used without Hoval heat generator, the control module for operating the heating circuit/domestic hot water module and a wall casing with control module cut-out must be ordered separately!

Inputs and outputs
- 3 variable sensor inputs:
  - 2x variable input for connection of a sensor
  - 1x variable input for connection of a sensor or pulse sensor
- 0-10V input, e.g. for connecting to heat zone control systems
- 0-10V or PWM output for controlling a variable-speed pump
- Connection of a flow rate sensor (or pulse sensor), e.g. for heat metering at the heat generator or with hot water
- Variable 230V 3-point output, e.g. for controlling the mixer
- Variable 230V output, e.g. for controlling the circulating pump
- 230V optocoupler input connected in series to the variable 230V output, e.g. for connecting a flow temperature guard for monitoring underfloor heating systems

Option
- Can be expanded by max. 2 module expansions (expansion of the inputs/outputs):
  - Module expansion heating circuit (1 heating/cooling circuit with/without mixer) or
  - Module expansion Universal (various special functions)

Functions
- Simple configuration and parameter setting of the plant by predefined hydraulic and function applications
- Weather-supported flow temperature controller for cooling operation with or without room influence taking account of building characteristics and switch-on optimisation

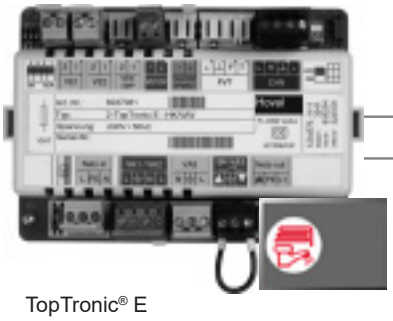

TopTronic® E heating circuit/hot water module

TopTronic® E module expansion heating circuit

TopTronic® E module expansion Universal

Max. 2 module expansions can be connected.

- Optimisation of the heating circuit flow temperatures and improvement in the room climate taking account of the weather forecast (only possible in combination with HovalConnect)
- Different basic programs (week programs, economy mode, holiday until, etc.) can be defined for each heating/cooling circuit plus ability to activate manual operation (construction site mode)
- Separate switching time programs for each heating/cooling circuit as well as for hot water with
  - 2 individually preset week programs comprising
    - 5 different - individually preset - day programs with
    - 6 switching points per day
- Different temperatures can be set for each switching cycle
- Various functions for hot water:
  - Selection of different basic programs (week programs, economy mode, holiday until, etc.)
  - various operating modes (e.g. accumulator priority or parallel mode)
  - adjustable storage tank pump post-operation
  - Storage tank discharge protection
  - Limiting and protection functions
- Definable switching times for circulation pump control
- Automatic changeover of summer/winter time
- Heating characteristic adaptation possible for each individual heating circuit
- Screed drying function for underfloor heating
- Requirement contact for constant requirements (ventilation, swimming pool, etc.)
- Modem switching function
- Free timer switch channel
- Pump anti-blocking protection
- Frost protection function
- Heat balancing for heat circuit or hot water
- Plant flow control (3-point mixer for controlling the plant reference temperature)
- Thermostat function
- Self-test with error diagnosis and error memory
- Relay test for each output can be activated separately
- Functions that can be implemented with module expansions:
  - Heating/cooling circuits without mixer
  - Heating/cooling circuits with mixer or
  - hot water loading circuits

Notice
Depending on the complexity, module expansions are required for using the listed functions (max. 2 module expansions can be connected)!

Use
- For room heating/cooling or hot water charging circuit
- For optimisation of the room climate by control algorithm taking account of the weather forecast (only possible in combination with HovalConnect)
- Upstream control for technical systems such as ventilation, air conditioning systems, etc. or also for heating zone control systems
- For decentralised assembly - remote from the control module - directly at the sensors and actuators (regulating armature located a long way away):
  - Installation in wall casing/control panel
  - Connection to the operating unit via Hoval CAN bus
- With significant expansion capability by controller modules via the Hoval CAN bus
- For flexible integration in modern communication systems via different interfaces
- For remote connection via HovalConnect

Delivery
- TopTronic® E heating circuit/hot water module incl. 2x mounting clips for DIN rail attachment
- DIN rail with fitting accessories
- 2x immersion sensor TF/2P/5/6T, L = 5.0 m
- 1x contact sensor ALF/2P/4/T, L = 4.0 m
- Basic plug set for controller module
  - Mains in
  - Plug for 230V output (VA3) (direct circuit pump, mixer circuit pump)
  - Plug for 2x 230V output (mixer) (VA1/VA2)
  - Plug for optocoupler input (SK-VA3) (flow temperature guard)
  - 2x plug for sensor (VE1/VE2)
  - Plug for 0-10V or PWM output (VA10V)
  - Plug for Hoval CAN bus

Notice
The supplementary plug set may have to be ordered to implement functions differing from the standard!

Description

Functions that can be implemented

TopTronic® E heating circuit/hot water module

TTE-HK/ WW	Plant flow control	1 direct heating circuit	2 direct heating circuits	1 mixed heating circuit	2 mixed heating circuits	3 mixed heating circuits	1 calorifier
Hydr. 0		x					
Hydr. 1			x				
Hydr. 2				x			
Hydr. 3					x		
Hydr. 4						x	
Hydr. 5							x
Hydr. 6	x						
Hydr. 7		x					x
Hydr. 8			x				x
Hydr. 9				x			x
Hydr. 10					x		x
Hydr. 11		x		x			x
Hydr. 12	x	x					
Hydr. 13	x		x				
Hydr. 14	x			x			
Hydr. 15	x				x		
Hydr. 16	x	x					x
Hydr. 17	x		x				x
Hydr. 18	x			x			x
Hydr. 19	x	x		x			x

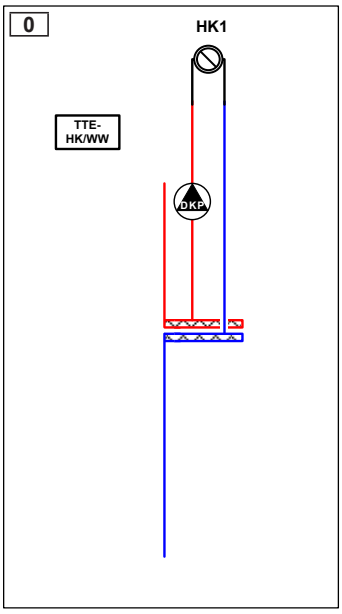

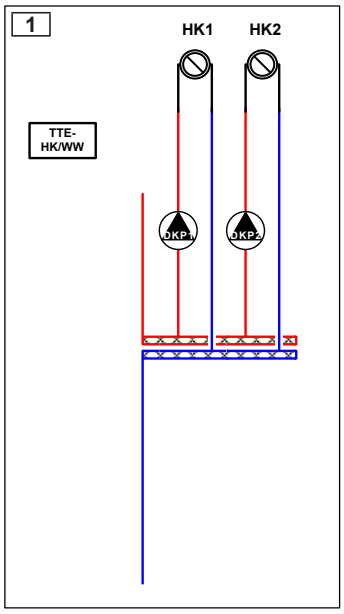

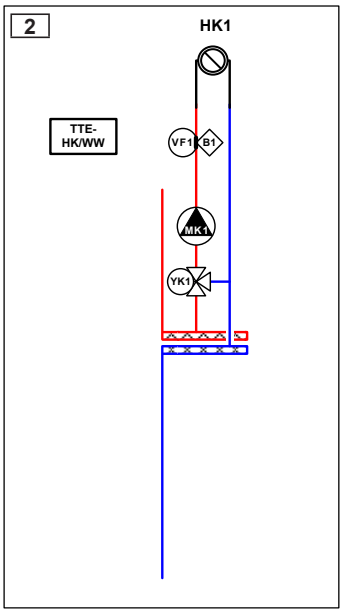

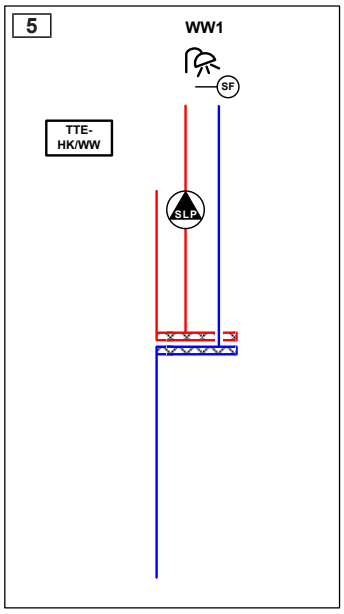

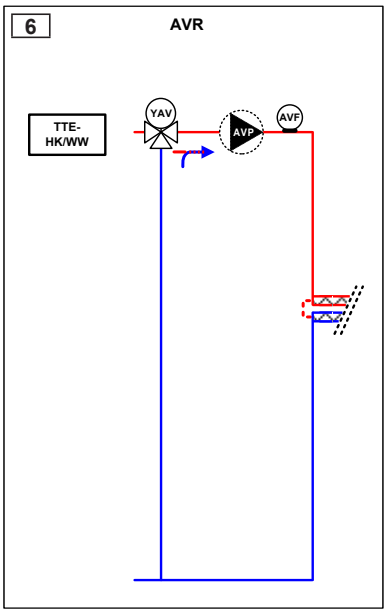

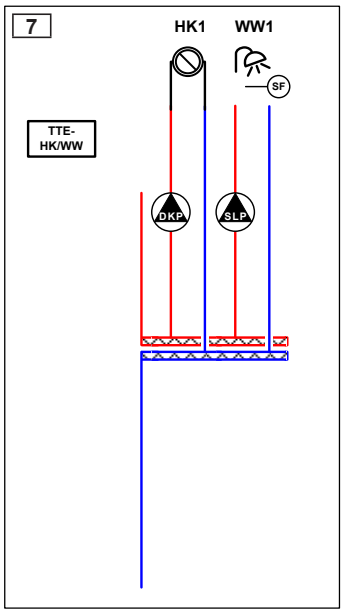

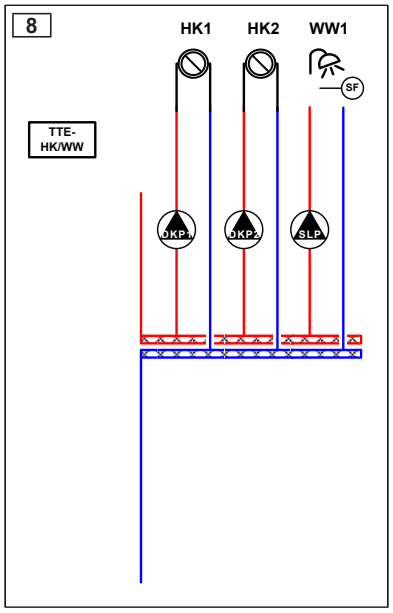

Description

TopTronic® E heating circuit/hot water module and 1 module expansion

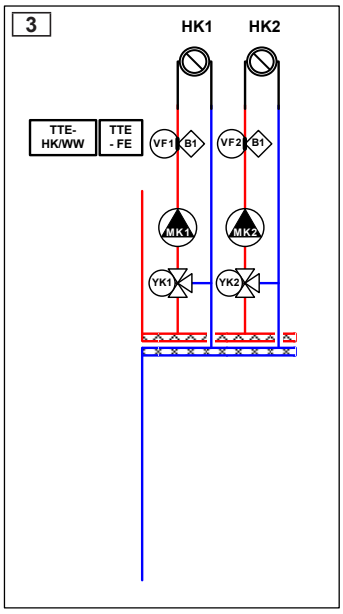

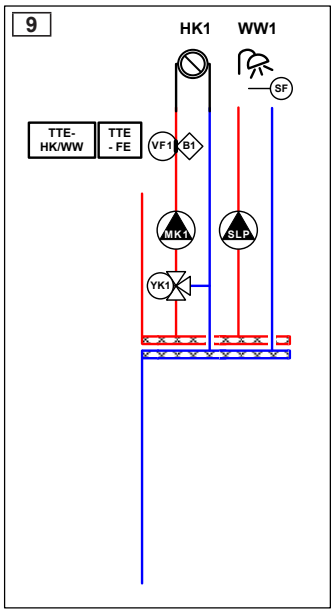

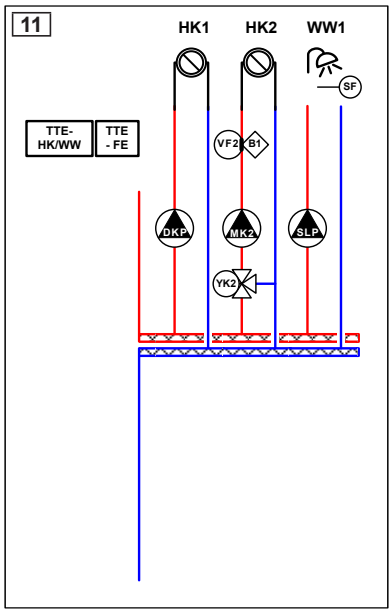

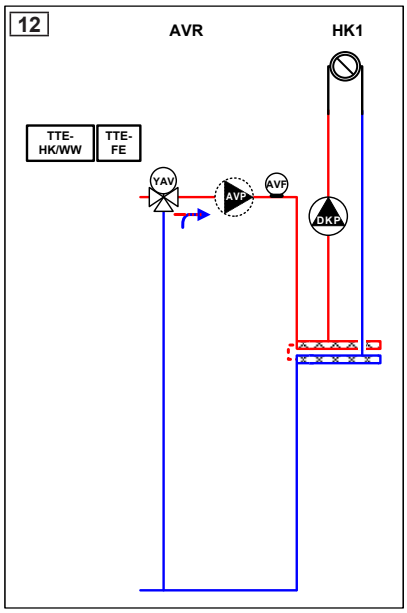

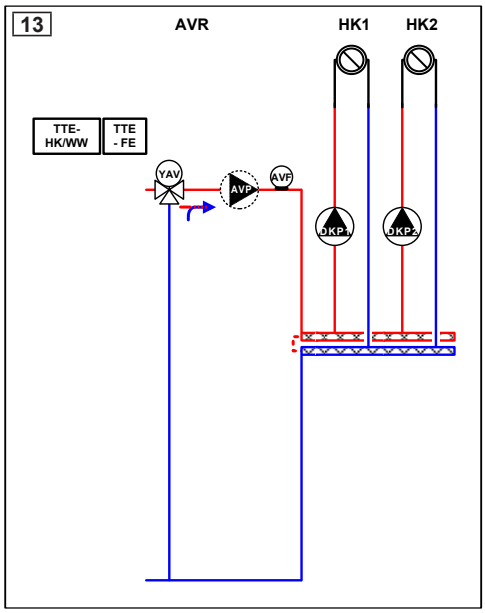

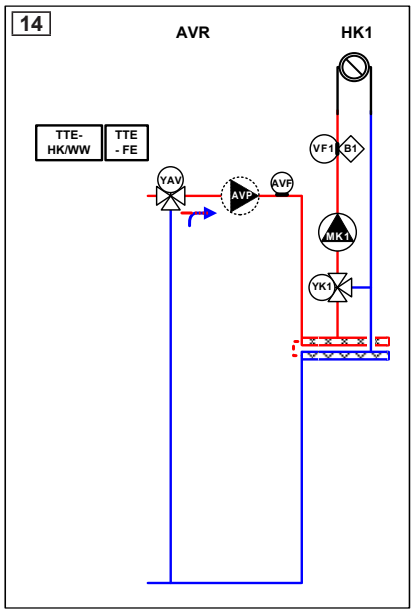

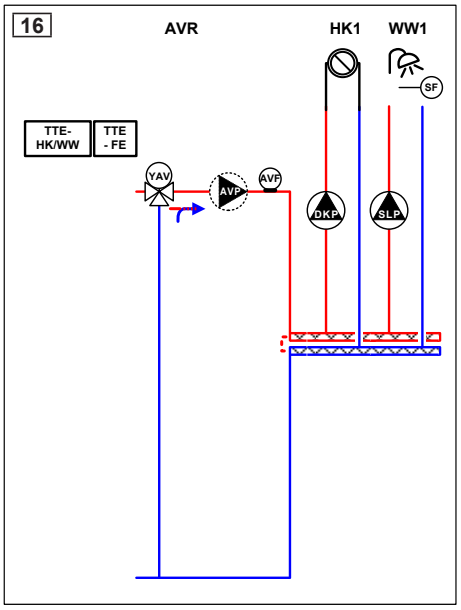

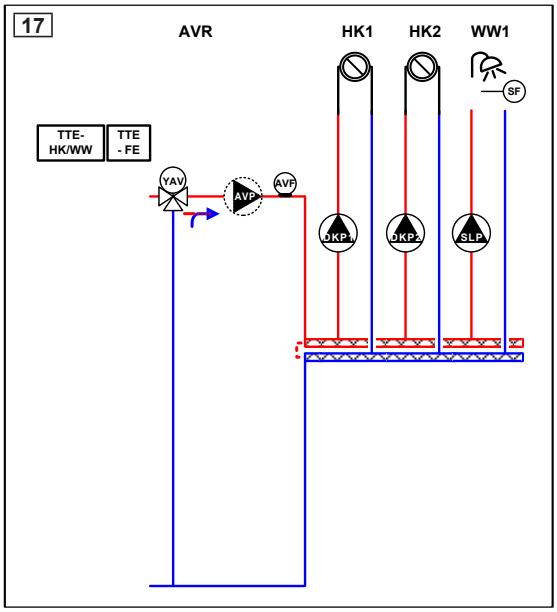

Description

TopTronic® E heating circuit/hot water module and 2 module expansions

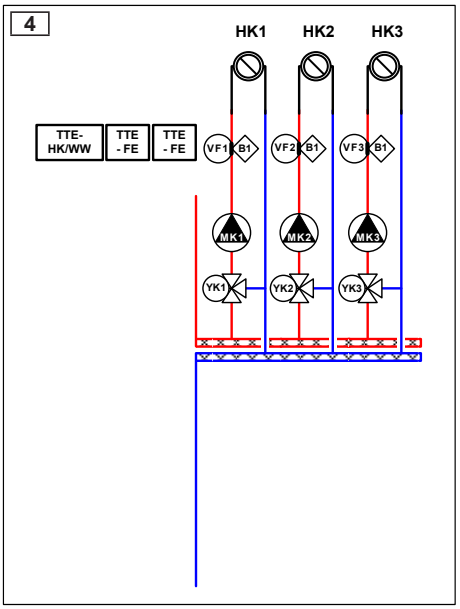

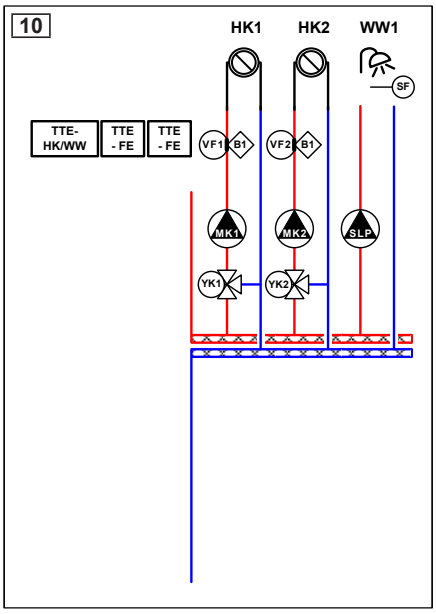

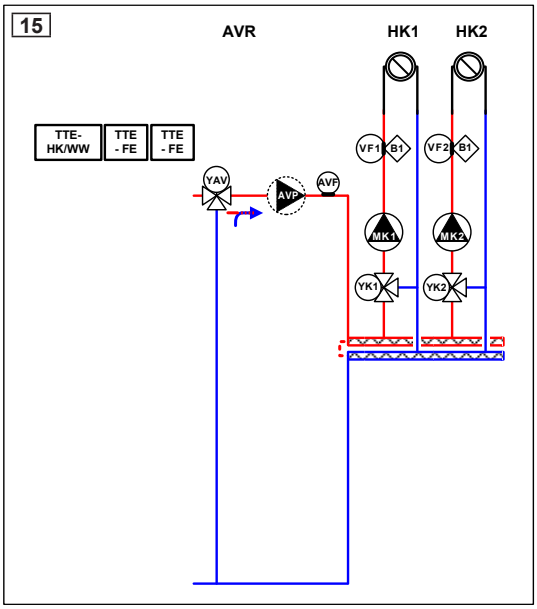

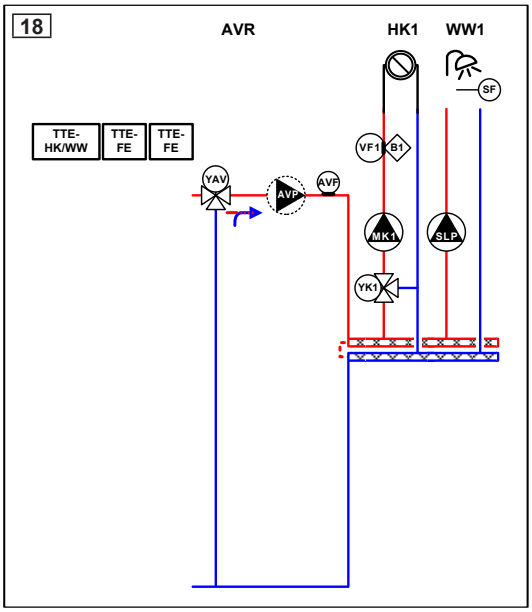

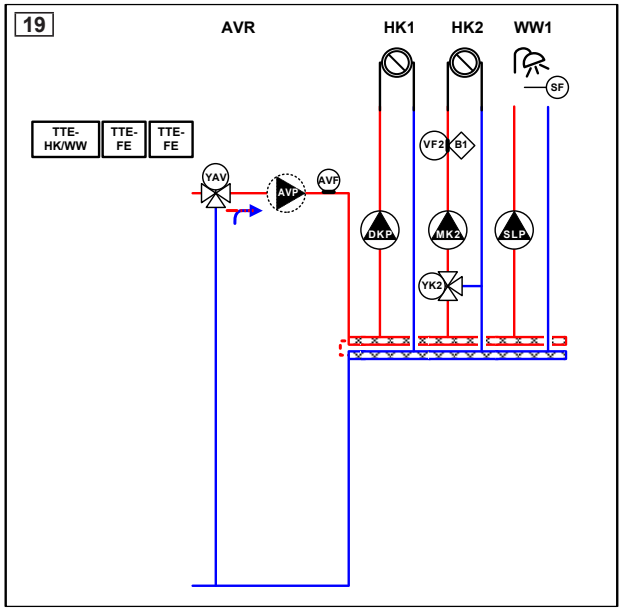

Part No.

TopTronic® E heating circuit/hot water module	Part No.

TopTronic® E heating circuit/hot water module TTE-HK/WW
Controller module for controlling consumers with integrated control functions for:
- 1 heating/cooling circuit w/o mixer or
- 1 heating/cooling circuit with mixer or
- 1 hot water loading circuit
- various additional functions
 	
Consisting of:
TopTronic® E heating circuit/hot water module incl. 2 pcs. mounting clips for top hat rail attachment
- 2 pcs. immersion sensor TF/2P/5/6T, L=5 m
- 1 pce. contact sensor ALF/2P/4/T, L=4 m
- basic plug set for controller module:
  - mains in
  - plug for 230 V output (VA3) (direct circuit pump, mixer circuit pump)
  - plug for 2x 230V output (mixer) (VA1/VA2)
  - plug for optocoupler input (SK-VA3) (flow temperature monitor)
  - 2x plugs for sensors (VE1/VE2)
  - Plug for 0-10V or PWM output (VA10V)
- top hat rail with fitting accessories
	6034 571

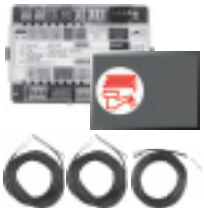

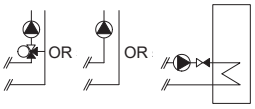

Notice
If the controller module is used without Hoval heat generator then a TopTronic® E control module must be ordered separately!

Notice
Depending on the complexity, module expansions are required for using the listed functions (max. 2 module expansions can be connected)!

Notice
The supplementary plug set may have to be ordered to implement functions differing from the standard!

Supplementary plug set for controller modules and module expansion TTE-FE HK Consisting of Rast-5 mating plugs for connecting further sensors and actuators on the controller module or on the module expansion. The controller module is already equipped with a basic plug set, the supplementary plug set is required for advanced functions. Consisting of: - Plug for mains out - Plug for sensor (variable input) (VE3) - Plug for 0-10 V input (VE10V) - Plug for flow rate sensor (FVT)	6034 503

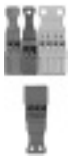

Part No.

TopTronic® E module expansions for TopTronic® E heating circuit/hot water module	Part No.

Max. 2 expansions can be connected.

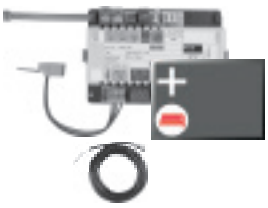

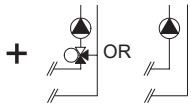

TopTronic® E module expansion heating circuit TTE-FE HK — 6034 576

Expansion to the inputs and outputs of the basic module heat generator or the heating circuit/domestic hot water module for implementing the following functions:
- 1 heating/cooling circuit w/o mixer or
- 1 heating/cooling circuit with mixer

Consisting of:
- TopTronic® E module expansion
- top hat rail with fitting accessories
- ribbon cable for connecting the
- device bus to the controller module
- connection set for connecting the
- controller module to the mains voltage
- 1 pce. contact sensor ALF/2P/4/T, L = 4.0 m
- basic plug set for module expansions:
  - Plug for 230 V output (VA3) (direct circuit pump, mixer circuit pump)
  - Plug for 2x 230V output (mixer) (VA1/VA2)
  - Plug for optocoupler input (SK-VA3) (flow temperature monitor)
  - 2x plugs for sensors (VE1/VE2)
  - Plug for 0-10V or PWM output (VA10V)

Notice
The supplementary plug set may have to be ordered to implement functions differing from the standard!

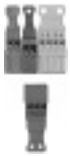

Supplementary plug set — 6034 503

for controller modules and module expansion TTE-FE HK
Consisting of Rast-5 mating plugs for connecting further sensors and actuators on the controller module or on the module expansion. The controller module is already equipped with a basic plug set, the supplementary plug set is required for advanced functions.

Consisting of:
- Plug for mains out
- Plug for sensor (variable input) (VE3)
- Plug for 0-10 V input (VE10V)
- Plug for flow rate sensor (FVT)

Part No.

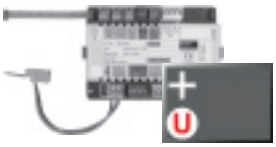

	Part No.
TopTronic® E module expansion Universal TTE-FE UNI Expansion to the inputs and outputs of a controller module (basic module heat generator, heating circuit/domestic hot water module, solar module, buffer module) for implementing various functions Consisting of: - TopTronic® E module expansion - top hat rail with fitting accessories - ribbon cable for connecting the device bus to the controller module - connection set for connecting the controller module to the mains voltage - complete plug set for module expansions	6034 575

Further information
See “Hoval TopTronic® E module expansions” chapter

TopTronic® E controller modules, control/room control modules, HovalConnect, wall casing, sensor
see separate chapter

Technical data

TopTronic® E heating circuit/hot water module

Type	TTE-HK/WW
• Power supply max.	230 V AC +6/-10 %
• Frequency	50-60 Hz
• Min. power consumption	0.8 W
• Max. power consumption	7.8 W
• Fuse	10 A slow-blow
Output (low voltage)	
• Electromechanical relays	3
Output (extra-low voltage)	
• Signal output PWM or 0-10 V	1
Switching capacity	
• Electromechanical relays	3 A
Input (low voltage)	
• Optocoupler input	1
Inputs (extra-low voltage)	
• Input 0-10 V	1
• Inputs sensors	2
• Inputs flow rate sensor	1
• Pulse input	1 (can be switched over to sensor)
Expansion (module expansion)	
• Max. number	2
Casing	
• Installation	Top hat rail mounting
• Dimensions (W x H x D) incl. plug	150 x 100 x 75 mm
• Ambient temperature (during operation)	0…50 °C
• Humidity (in operation)	20...80 % RH, non-condensing
• Storage temperature	-20...60 °C
Bus system (Hoval CAN bus)	
• Capacity	max. 4 control modules / 3 control modules + 1 gateway
• Bus supply	yes
• Bus line	4-wire bus
• Bus length	twisted, shielded, max. 100 m
• Line cross-section	min. 0.5 mm²
• Cable type (recommended)	JY-(ST) 2 x 2 x 0.6
Other bus interfaces	Internal unit bus (master)
Miscellaneous	
• Spring reserve	approx. 10 years, battery buffered
• Type of protection	IP 20
• Protection class	I – EN 60730
• Plug types	Rast 5 (coloured, coded)

Electrical connection

TopTronic® E heating circuit/hot water module

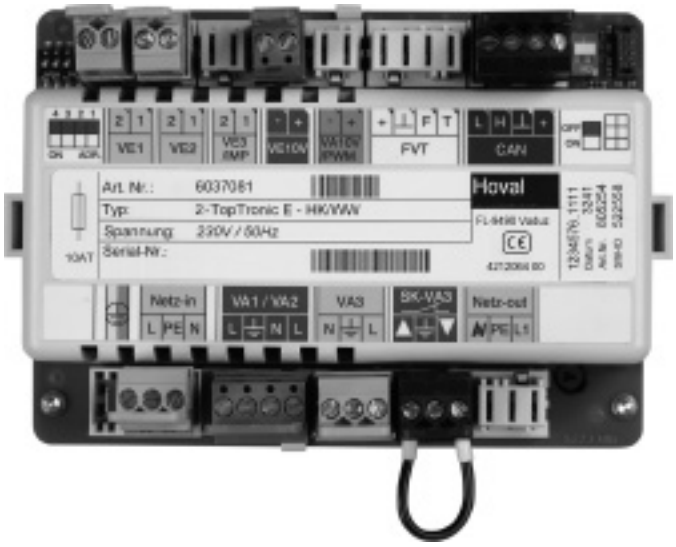

Description

TopTronic® E solar module

- The controller module is suitable for use as differential temperature control, control of thermal solar plants, for heating process water and/or heating support.
- The controller module contains predefined hydraulic applications for different applications or plants.
- The solar yield calculation calculates the current output, the split yield in kWh as well as the total yield in MWh.
- Control unit with integrated regulating functions for:
  - One/two circuit solar energy plants
  - integrated heat balancing
  - Various additional functions
- Connection technology executed as plug-in screw terminals in coded RAST-5 design
- Update capability of the controller software
- Time and date via integrated RTC, multi-year spring reserve
- Fine fuse 10 A
- Control unit suitable for cabinet installation thanks to ability to install on DIN rail 35 x 15 x 2.2 mm
- Expansion possibilities via Hoval CAN bus:
  - max. 16 controller modules in the bus system
  - max. 16 solar modules in the bus system

Notice
Operation of the controller module is generally via the TopTronic® E control module installed in the heat generator!
If the control module is used without Hoval heat generator, the control module for operating the solar module and a wall casing with control module cut-out must be ordered separately!

Inputs and outputs
- 3 variable sensor inputs:
  - 2x variable input for connection of a sensor
  - 1x variable input for connection of a sensor or pulse sensor
- 0-10V input
- 0-10V or PWM output for controlling a variable-speed pump
- Connection of a flow rate sensor (or pulse sensor), e.g. for heat metering
- Variable 230V 3-point output
- Variable 230V output, e.g. for controlling a solar charging pump
- 230V optocoupler input connected in series to the variable 230V output

Option
- Can be expanded by max. 2 module expansions (expansion of the inputs/outputs):
  - Module expansion universal

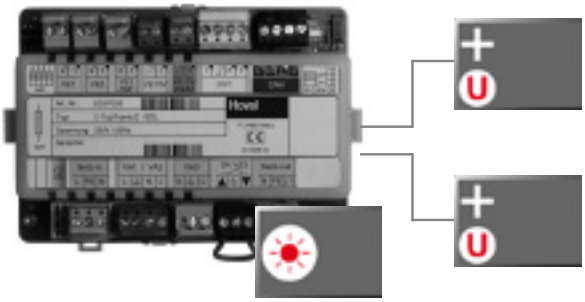

TopTronic® E solar module

Max. 2 module expansions can be connected.

Functions
- Simple configuration and parameter setting of the plant by predefined hydraulic and function applications
- 41 pre-programmed basic variants
- Differential temperature control
- Integrated solar yield calculation
- Storage tank cascade with up to 4 consumers
- Loading and unloading function for buffer
- Cooling down function
- Overheating and frost protection
- Forced energy/high-temperature discharge
- Collector cascade with up to 2 collector fields
- Charging via plate heat exchanger
- Heat exchanger cascade
- Additional functions, e.g. recharging function, circulating pump, etc.
- Start help function
- Consumer loading with type selection
- High temperature discharge
- Fault reporting output
- Return flow increase
- Forced energy/high-temperature discharge on storage tank or buffer maximum temperature
- Relay test for each output can be activated separately
- Self-test with error diagnosis and error memory
- Functions that can be implemented with module expansions:
  - Multi-circuit solar plants with up to 4 consumers
  - 2 collector fields
  - misc. application functions acc. to heating system diagrams

Notice
Depending on the complexity of the corresponding system hydraulics, module expansions are required for using the listed functions (max. 2 module expansions can be connected)!

Use
- Control of thermal solar plants with differential temperature control for heating process water and/or heating support
- For one/two-circuit solar plants with varying complexity with integrated heat balancing
- For decentralised assembly - remote from the control module - directly at the sensors and actuators (solar regulating armature located a long way away):
  - Installation in wall casing/control panel
  - Connection to the operating unit via Hoval CAN bus
- With significant expansion capability by controller modules via the Hoval CAN bus
- For flexible integration in modern communication systems via different interface modules
- For remote connection via HovalConnect

Delivery
- TopTronic® E solar module incl. 2x mounting clips for DIN rail attachment
- DIN rail with fitting accessories
- 1x immersion sensor TF/2P/5/6T, L = 5.0 m
- 1x collector sensor TF/1.1P/2.5S/5.5T, L = 2.5 m
- Basic plug set for controller module
  - Mains in
  - Plug for 230V output (VA3)
  - Plug for 2x 230V output (VA1/VA2)
  - Plug for optocoupler input (SK-VA3)
  - 2x plug for sensor (VE1/VE2)
  - Plug for 0-10V output (VA10V/PWM)
  - Plug for Hoval CAN bus

Notice
The supplementary plug set may have to be ordered to implement functions differing from the standard!

Description

Functions that can be implemented

TopTronic® E solar module

TTE-SOL	1 collector	2 collectors	Ext. HE	1 consumer	2 consumers	3 consumers	4 consumers	Change-over unit	Shut-off unit
Hydr. 1	x			x					
Hydr. 3	x			x	x			x	
Hydr. 5	x		x	x	x			x	
Hydr. 7	x			x	x				
Hydr. 9	x		x	x	x				
Hydr. 11	x			x	x	x		x	
Hydr. 13	x		x	x	x	x		x	
Hydr. 15	x			x	x	x			
Hydr. 17	x		x	x	x	x			
Hydr. 19	x			x	x	x	x	x	
Hydr. 20	x		x	x	x	x	x	x	
Hydr. 21	x			x	x	x	x		
Hydr. 22		x		x					
Hydr. 24		x		x	x			x	
Hydr. 26		x	x	x	x			x	
Hydr. 28		x	x	x	x				
Hydr. 30		x		x	x	x		x	
Hydr. 32		x	x	x	x	x		x	
Hydr. 34		x		x	x	x	x	x	
Hydr. 35		x	x	x	x	x	x	x	
Hydr. 36	x		x	x	x				x
Hydr. 37	x		x	x	x	x			x
Hydr. 38	x		x	x	x	x	x		x
Hydr. 39		x	x	x	x				x
Hydr. 40		x	x	x	x	x			x
Hydr. 41		x	x	x	x	x	x		x

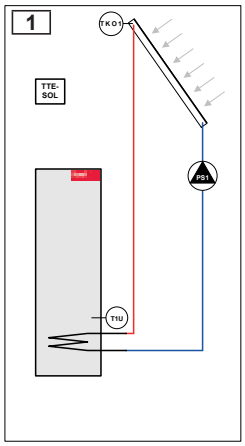

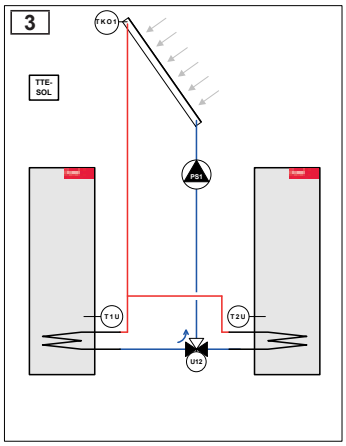

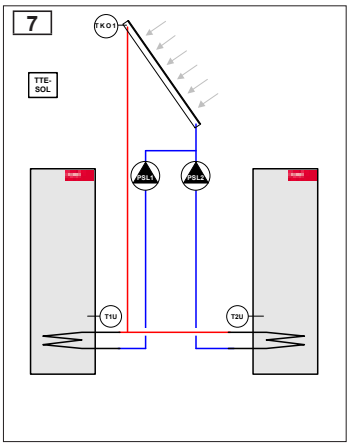

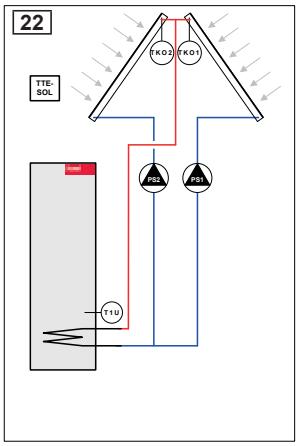

TopTronic® E solar module and 1 module expansion

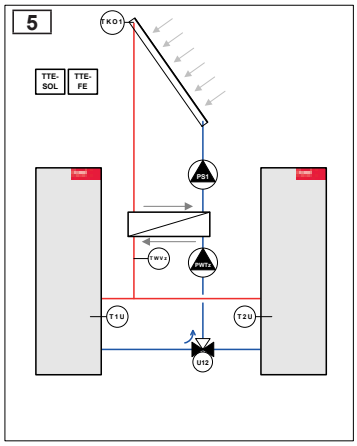

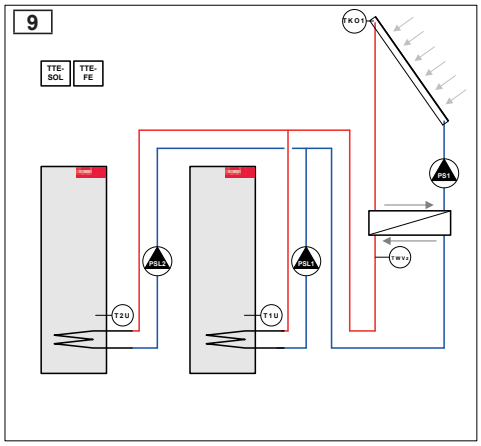

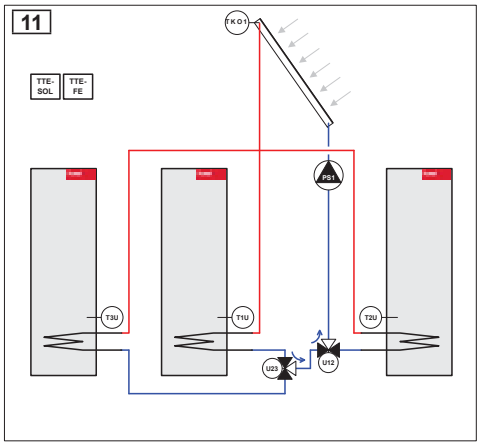

Description

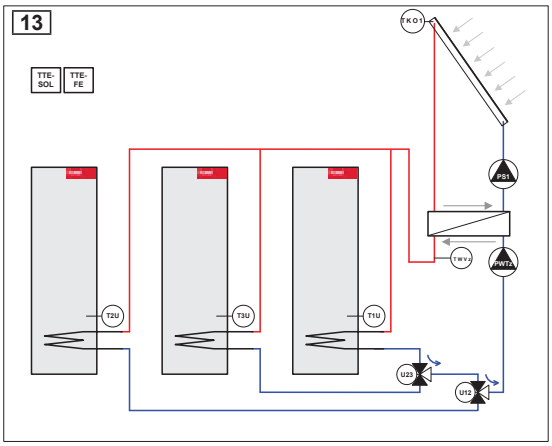

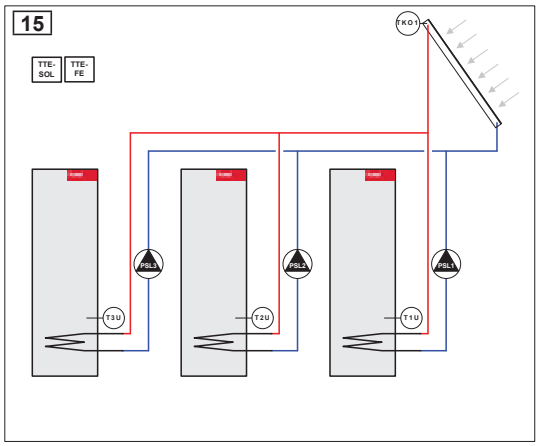

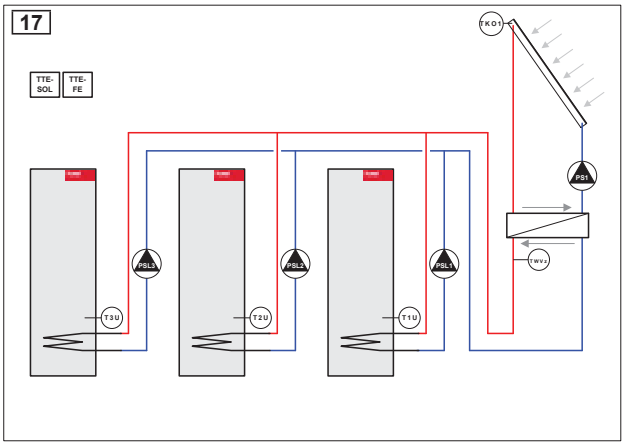

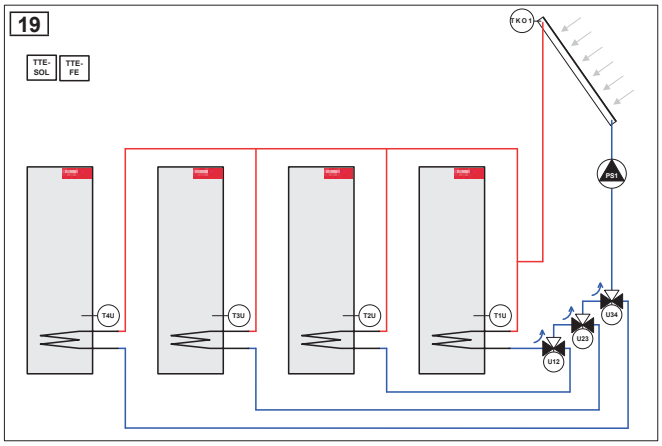

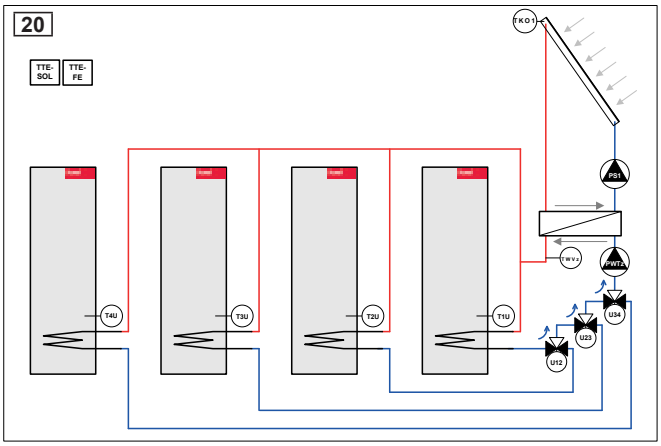

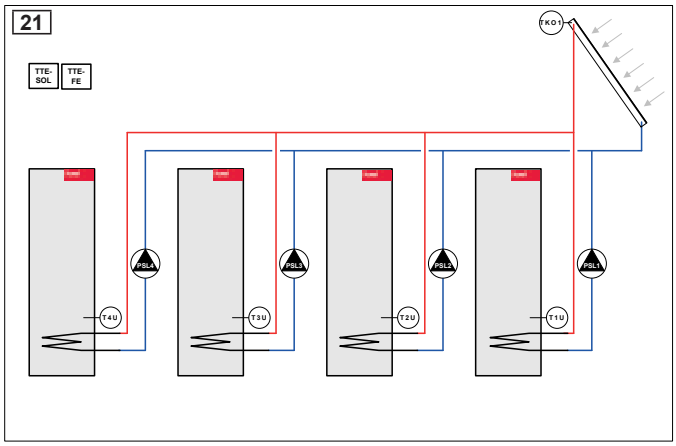

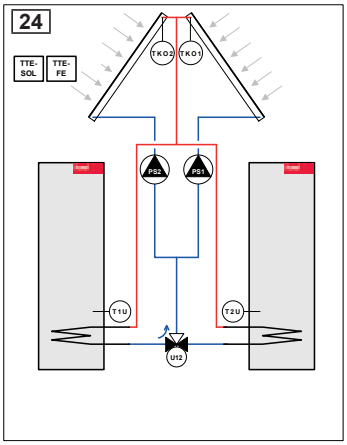

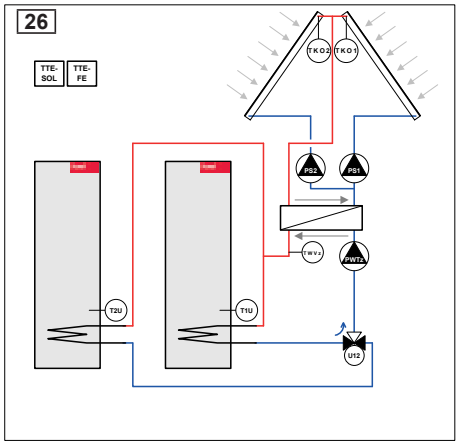

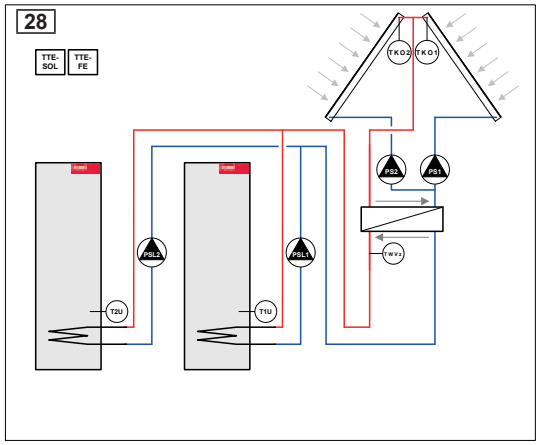

Description

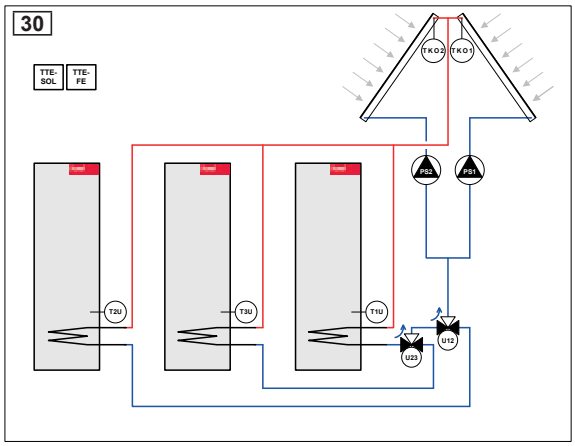

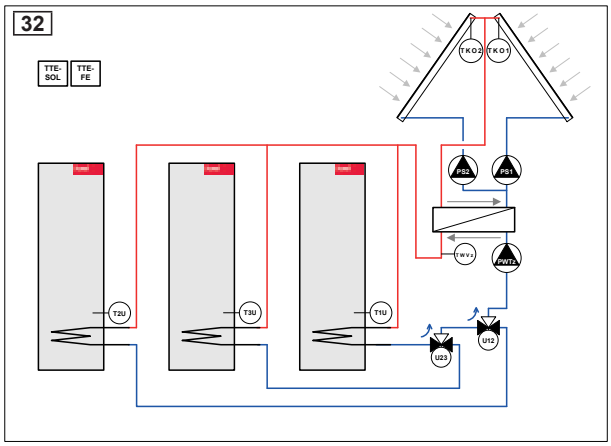

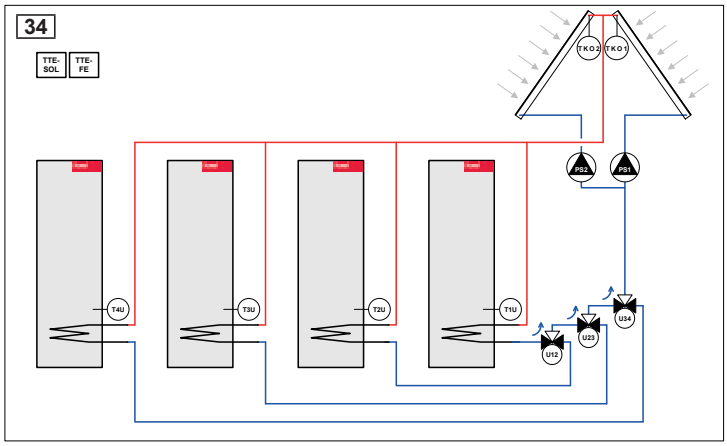

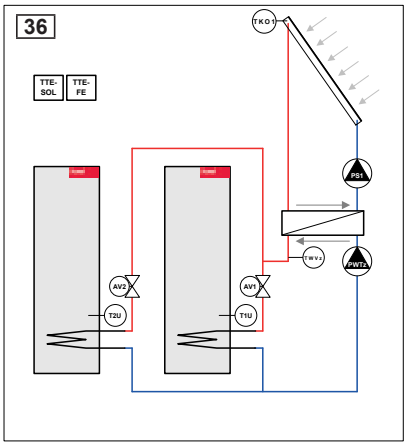

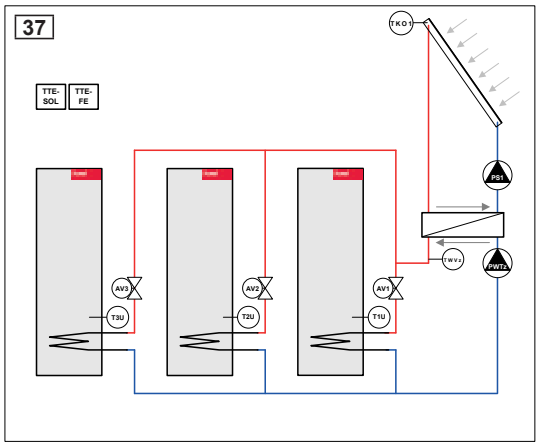

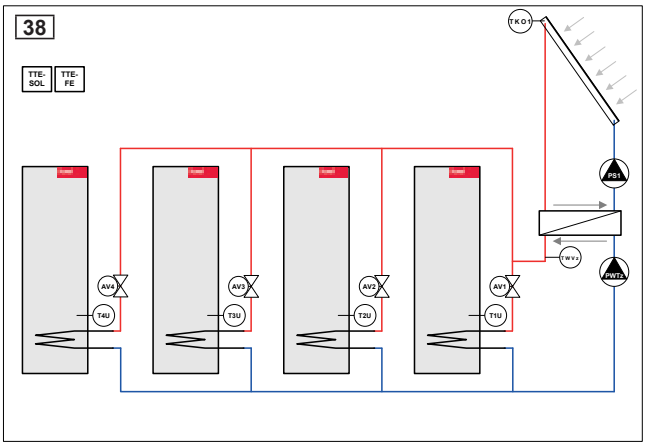

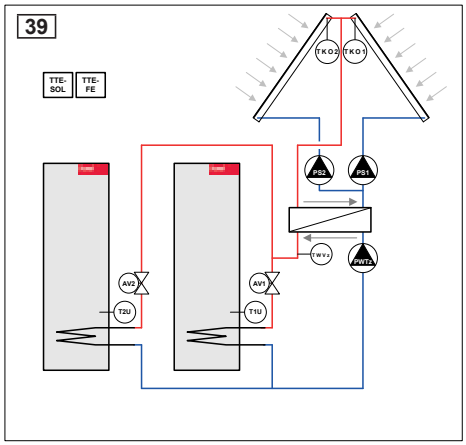

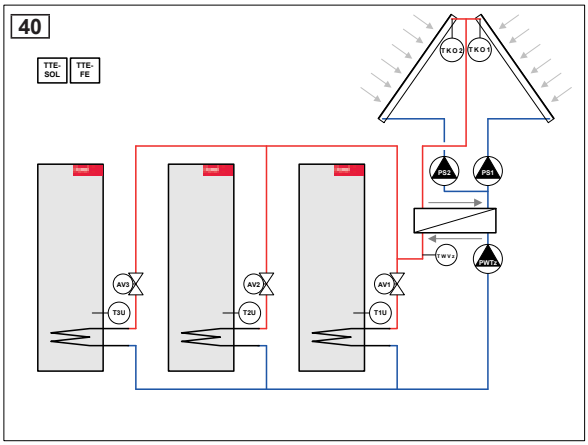

Description

TopTronic® E solar module and 2 module expansions

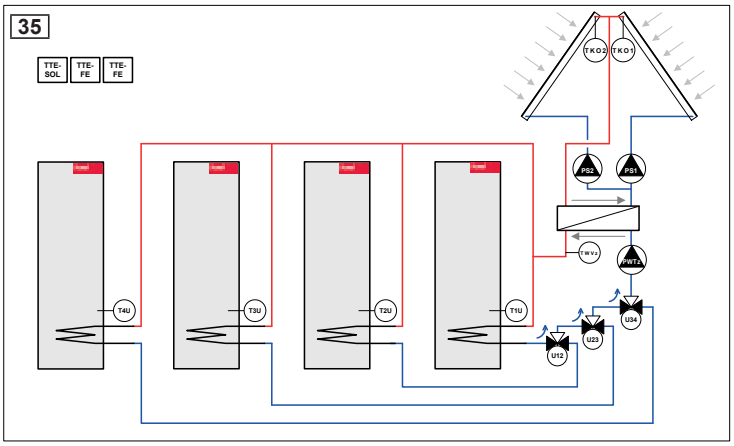

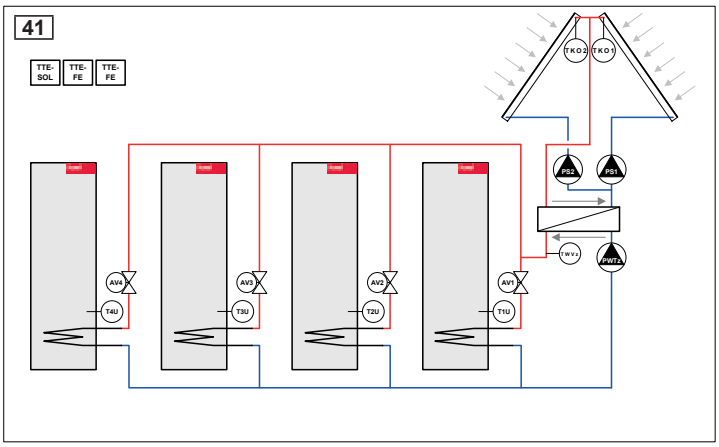

Part No.

TopTronic® E solar module	Part No.

TopTronic® E solar module TTE-SOL
The controller module is suitable for use as temperature differential control, control of thermal solar plants, for heating process water and/or heating support.
Controller module with integrated control functions for
- Solar circuit
- Collector cascade
- Storage tank cascade with up to 4 consumers
- Consumer loading, with type selection
- Temperature differential control
- Loading and unloading function for additional/reserve buffer tank
- Integrated solar yield calculation
 	
Consisting of:
- TopTronic® E solar module incl. 2 pcs. mounting clips for top hat rail attachment
- 1 pce. immersion sensor TF/2P/5/6T, L=5 m
- 1 pce. collector sensor TF/1.1P/2.5S/5.5T, L=2.5 m
- basic plug set for controller module:
  - Mains in
  - Plug for 230 V output (VA3)
  - Plug for 2x 230V output (VA1/VA2)
  - Plug for optocoupler input (SK-VA3)
  - 2x plugs for sensors (VE1/VE2)
  - Plug for 0-10 V output (VA10V/PWM)
  - Plug for Hoval CAN bus
- top hat rail with fitting accessories
	6037 058

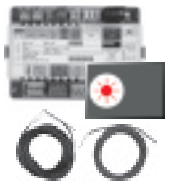

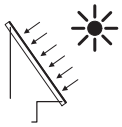

Notice
In a standalone application, the control module for operating the solar module and a wall casing must be ordered separately!

Notice
Depending on the complexity, module expansions are required for using the listed functions (max. 2 module expansion can be connected)!

Notice
The supplementary plug set may have to be ordered to implement functions differing from the standard!

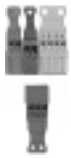

Supplementary plug set — 6034 503

for controller modules and module expansion TTE-FE HK
Consisting of Rast-5 mating plugs for connecting further sensors and actuators on the controller module or on the module expansion.
The controller module is already equipped with a basic plug set, the supplementary plug set is required for advanced functions.

Consisting of:
- Plug for mains out
- Plug for sensor (variable input) (VE3)
- Plug for 0-10 V input (VE10V)
- Plug for flow rate sensor (FVT)

Part No.

TopTronic® E module expansion for TopTronic® E solar module	Part No.
Max. 2 expansions can be connected.	
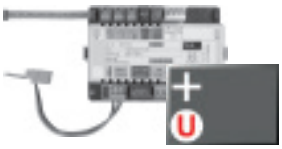 **TopTronic® E module expansion Universal TTE-FE UNI** Expansion to the inputs and outputs of a controller module (basic module heat generator, heating circuit/domestic hot water module, solar module, buffer module) for implementing various functions Consisting of: - TopTronic® E module expansion - top hat rail with fitting accessories - ribbon cable for connecting the device bus to the controller module - connection set for connecting the controller module to the mains voltage - complete plug set for module expansions	6034 575
Notice Refer to the Hoval System Technology to find which functions and hydraulic arrangements can be implemented.	
Further information See “Hoval TopTronic® E module expansions” chapter	
TopTronic® E controller modules, control/room control modules, HovalConnect, wall casing, sensor see separate chapter	

Technical data

TopTronic® E solar module

Type	TTE-SOL
• Power supply max.	230 V AC +6/-10 %
• Frequency	50-60 Hz
• Min. power consumption	0.8 W
• Max. power consumption	7.8 W
• Fuse	10 A slow-blow
Output (low voltage)	
• Electromechanical relays	3
Output (extra-low voltage)	
• Signal output PWM or 0-10 V	1
Switching capacity	
• Electromechanical relays	3 A
Input (low voltage)	
• Optocoupler input	1
Inputs (extra-low voltage)	
• Input 0-10 V	1
• Inputs sensors	2
• Inputs flow rate sensor	1
• Pulse input	1 (can be switched over to sensor)
Expansion (module expansion)	
• Max. number	2
Casing	
• Installation	Top hat rail mounting
• Dimensions (W x H x D) incl. plug	150 x 100 x 75 mm
• Ambient temperature (during operation)	0…50 °C
• Humidity (in operation)	20...80 % RH, non-condensing
• Storage temperature	-20...60 °C
Bus system (Hoval CAN bus)	
• Capacity	max. 4 control modules / 3 control modules + 1 gateway
• Bus supply	yes
• Bus line	4-wire bus
• Bus length	twisted, shielded, max. 100 m
• Line cross-section	min. 0.5 mm²
• Cable type (recommended)	JY-(ST) 2 x 2 x 0.6
Other bus interfaces	Internal unit bus (master)
Miscellaneous	
• Spring reserve	approx. 10 years, battery buffered
• Type of protection	IP 20
• Protection class	I – EN 60730
• Plug types	Rast 5 (coloured, coded)

Electrical connection

TopTronic® E solar module

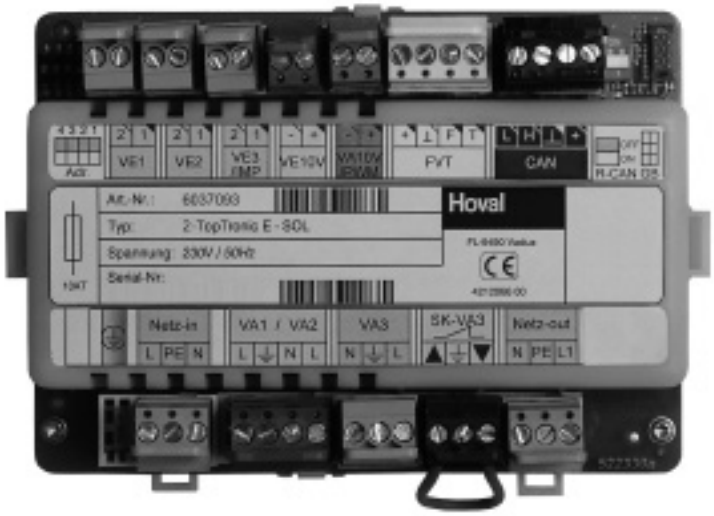

Description

TopTronic® E buffer module

- Control unit with integrated regulating functions for:
  - Heating buffer management or
  - Cooling buffer management
  - Various additional functions
- Connection technology executed as plug-in screw terminals in coded RAST-5 design
- Update capability of the controller software
- Time and date via integrated RTC, multi-year spring reserve
- Fine fuse 10 A
- Control unit suitable for cabinet installation thanks to ability to install on DIN rail 35 x 15 x 2.2 mm
- Expansion possibilities via Hoval CAN bus:
  - max. 16 controller modules in the bus system
  - max. 2 buffer modules
  - max. 1 active heating butter and max. 1 active cooling buffer function

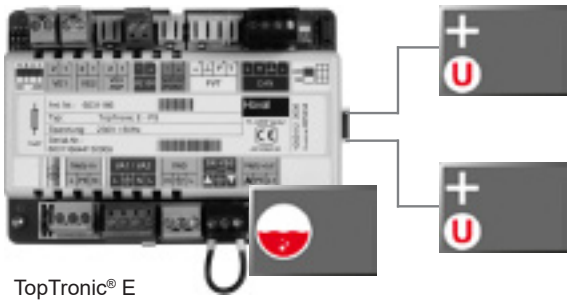

Max. 2 module expansions can be connected.

Notice
Operation of the controller module is generally via the TopTronic® E control module installed in the heat generator!
If the control module is used without Hoval heat generator, the control module for operating the buffer module and a wall casing with control module cut-out must be ordered separately!

Inputs and outputs
- 3 variable sensor inputs:
  - 2x variable input for connection of a sensor
  - 1x variable input for connection of a sensor or pulse sensor
- 0-10V input, e.g. for setpoint connection
- 0-10V or PWM output for controlling a variable-speed pump
- Connection of a flow sensor (or pulse sensor)
- Variable 230V 3-point output
- Variable 230V output, e.g. for controlling a buffer charging pump
- 230V optocoupler input connected in series to the variable 230V output

Option
- Can be expanded by max. 2 module expansions (expansion of the inputs/outputs):
  - Module expansion universal

Functions
- Simple configuration and parameter setting of the plant by predefined hydraulic and function applications
- Heating buffer loading controls:
  - 1 or 2 buffer sensors
  - Stratified charge mixing valve with separate buffer loading sensor
  - Modulating buffer charging pump (0-10 V/PWM) constant or delta T-controlled
- Heating buffer discharge control with
  - 1 buffer sensor
  - Changeover element or discharging mixer valve with separate buffer discharging sensor
- Cooling buffer loading control with 1 or 2 cooling buffer sensors
- External requirement contacts for constant requirement
- External requirement contacts for reference value increase/reduction for implementing tariff charging, SmartGrid, etc.
- Separate differential controls and thermostat functions for changeover in multiple buffer applications
- Pump anti-blocking protection
- Heat quantity balancing
- Buffer charging or buffer discharging
- Relay test for each output can be activated separately
- Self-test with error diagnosis and error memory
- Thermostat function
- Functions that can be implemented with module expansions:
  - misc. special functions acc. to heating system diagrams

Notice
Depending on the complexity, module expansions are required for using the listed functions (max. 2 module expansions can be connected)!

Use
- For energy management of heating and cooling buffers in simply and complex heating systems
- For optimising the energy efficiency of the overall system by various functions such as tariff charging, SmartGrid function, etc.
- For decentralised assembly - remote from the control module - directly at the sensors and actuators (buffer storage tank located a long way away)
  - Installation in wall casing/control panel
  - Connection to the operating unit via Hoval CAN bus
- With significant expansion capability by controller modules via the Hoval CAN bus
- For flexible integration in modern communication systems via different interfaces
- For remote connection via HovalConnect

Delivery
- TopTronic® E buffer module incl. 2x mounting clips for DIN rail attachment
- DIN rail with fitting accessories
- 2x immersion sensor TF/2P/5/6T, L = 5.0 m
- Basic plug set for controller module
  - Mains in
  - Plug for 230V output (VA3) (direct circuit pump, mixer circuit pump)
  - Plug for 2x 230V output (mixer) (VA1/VA2)
  - Plug for optocoupler input (SK/VA3) (flow temperature controller)
  - 2x plug for sensor (VE1/VE2)
  - Plug for 0-10V or PWM output (VA10V)
  - Plug for Hoval CAN bus

Notice
The supplementary plug set may have to be ordered to implement functions differing from the standard!

Description

TTE-PS	Heating buffer charging control					Heating buffer charging control			Cooling buffer charging control	
	1 buffer sensor	2 buffer sensors	Charging mixing valve	Modulating charging pump constant	Modulating charging pump dT	Change-over unit	Discharging mixer	Buffer start-up release	1 buffer sensor	2 buffer sensors
Hydr. 0	x									
Hydr. 1		x						x		
Hydr. 2		x								
Hydr. 3		x	x							
Hydr. 4		x		x						
Hydr. 5	x				x					
Hydr. 6		x			x					
Hydr. 7						x				
Hydr. 8						x		x		
Hydr. 9							x	x		
Hydr. 10							x			
Hydr. 11									x	
Hydr. 12										x
Hydr. 13	x								x	
Hydr. 14		x								x

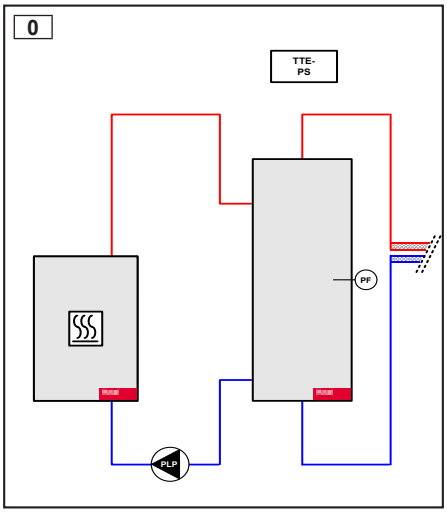

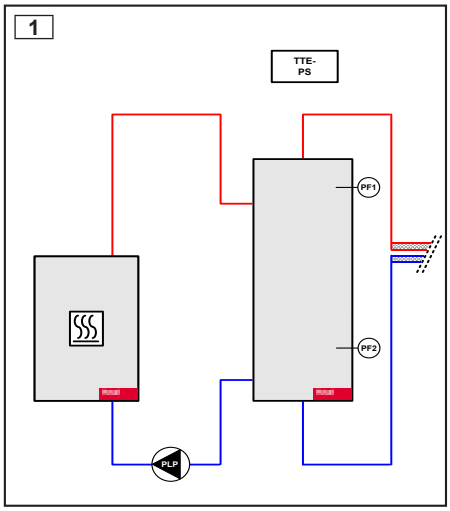

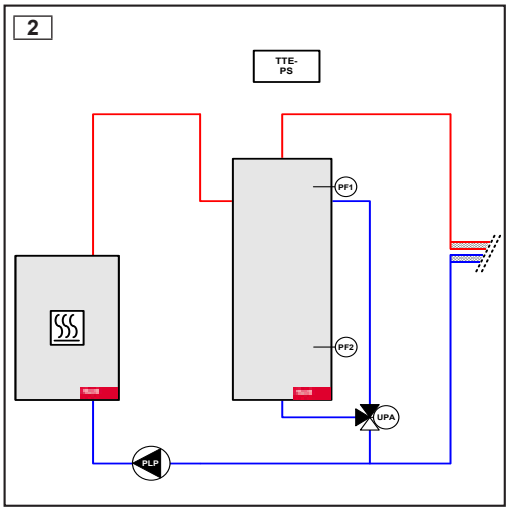

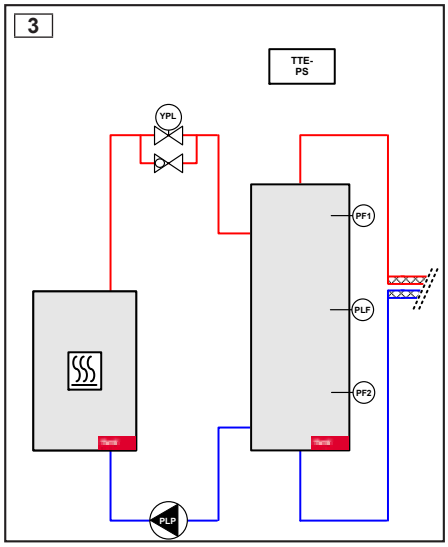

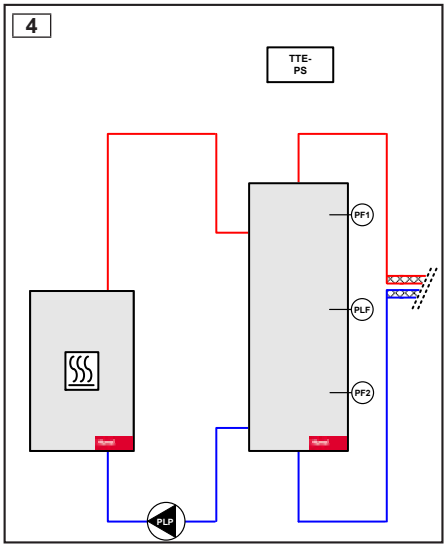

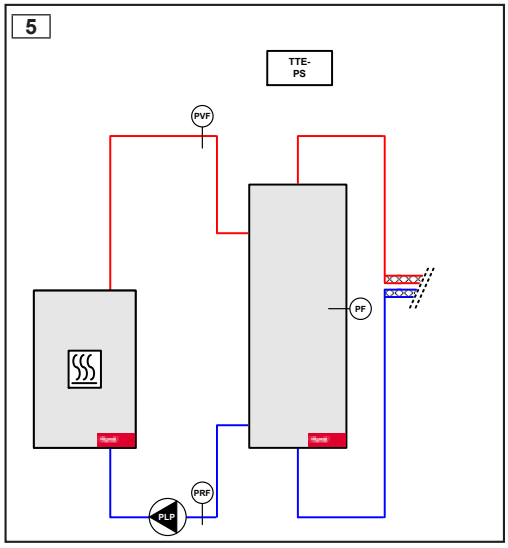

Description

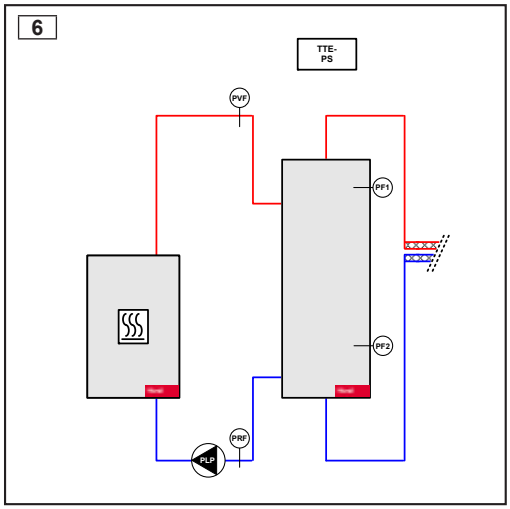

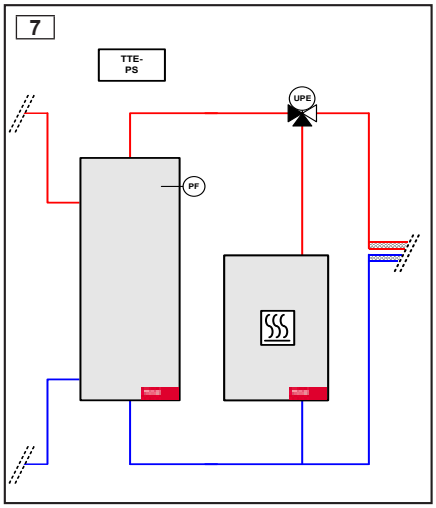

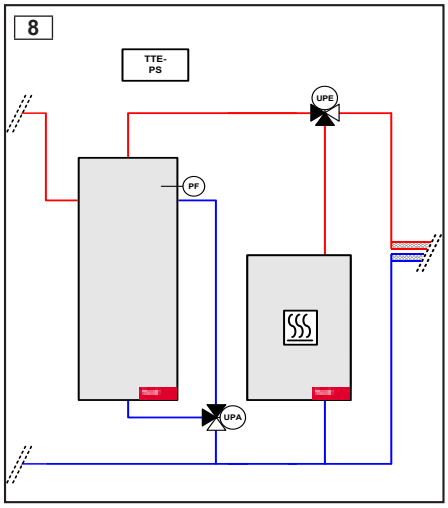

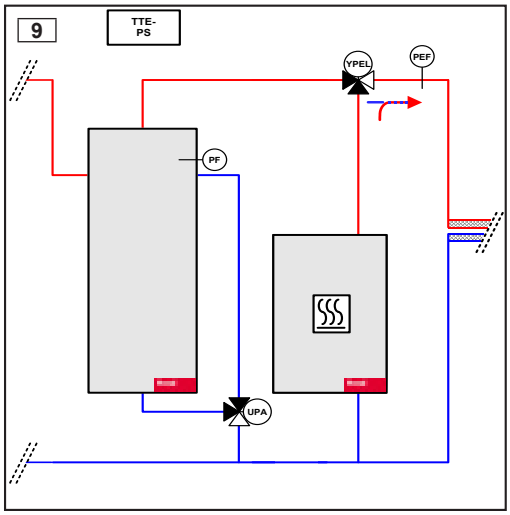

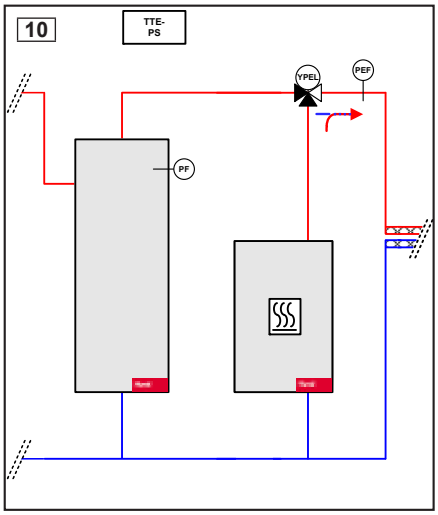

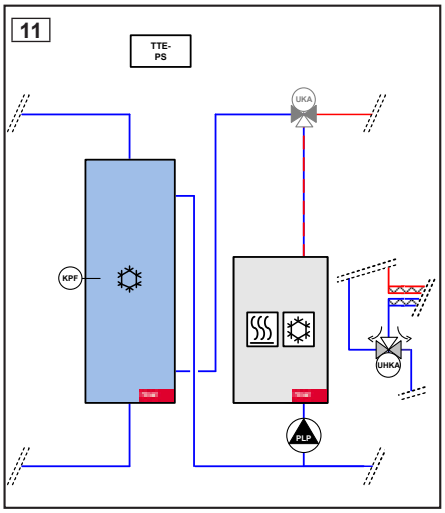

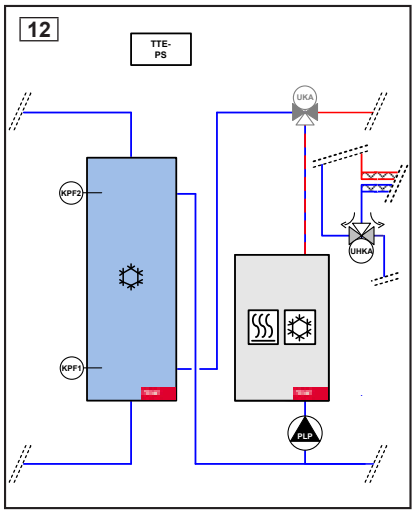

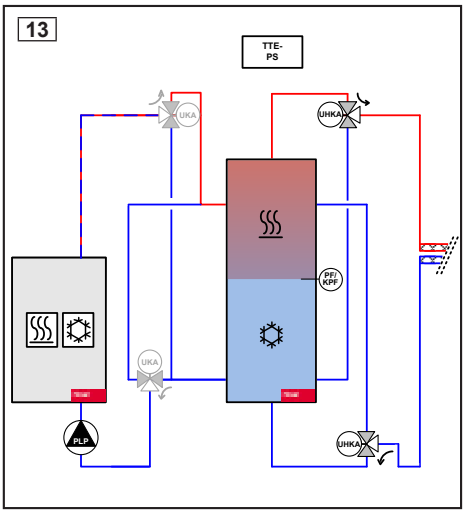

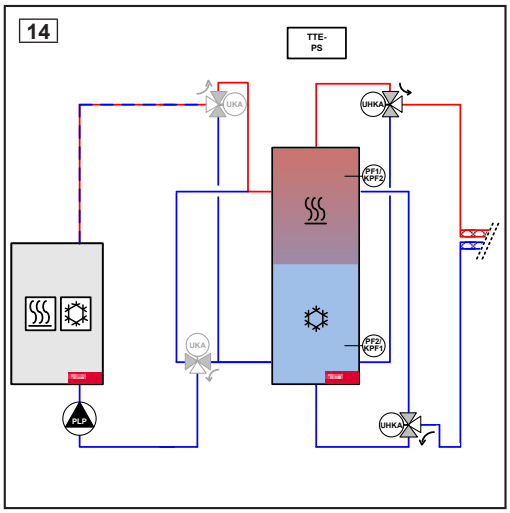

Part No.

TopTronic® E buffer module	Part No.

 **TopTronic® E buffer module TTE-PS**
Controller module with integrated control functions for:
- heating buffer management
or
- cooling buffer management
- var. additional functions
 	
Consisting of:
- TopTronic® E buffer module incl. 2 pcs. mounting clips for top hat rail attachment
- 2 pcs. immersion sensor TF/2P/5/6T, L=5 m
- basic plug set for controller module:
  - mains in
  - plug for 230 V output (VA3) (direct circuit pump, mixer circuit pump)
  - plug for 2x 230V output (mixer) (VA1/VA2)
  - plug for optocoupler input (SK-VA3) (flow temperature monitor)
  - 2x plugs for sensors (VE1/VE2)
  - Plug for 0-10V or PWM output (VA10V)
  - plug for Hoval CAN bus
- top hat rail with fitting accessories
 	
Notice
If the controller module is used without Hoval heat generator then a TopTronic® E control module must be ordered separately!
 	
Notice
Depending on the complexity, module expansions are required for using the listed functions (max. 2 module expansions can be connected)!
 	
Notice
The supplementary plug set may have to be ordered to implement functions differing from the standard!
	6037 057

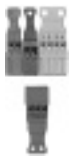 **Supplementary plug set** for controller modules and module expansion TTE-FE HK Consisting of Rast-5 mating plugs for connecting further sensors and actuators on the controller module or on the module expansion. The controller module is already equipped with a basic plug set, the supplementary plug set is required for advanced functions. Consisting of: - Plug for mains out - Plug for sensor (variable input) (VE3) - Plug for 0-10 V input (VE10V) - Plug for flow rate sensor (FVT)	6034 503

Part No.

TopTronic® E module expansion for TopTronic® E buffer module	Part No.
Max. 2 expansions can be connected.	
TopTronic® E module expansion Universal TTE-FE UNI Expansion to the inputs and outputs of a controller module (basic module heat generator, heating circuit/domestic hot water module, solar module, buffer module) for implementing various functions Consisting of: - TopTronic® E module expansion - top hat rail with fitting accessories - ribbon cable for connecting the device bus to the controller module - connection set for connecting the controller module to the mains voltage - complete plug set for module expansions	6034 575

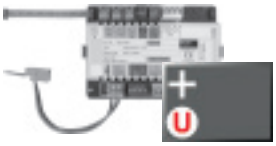

Notice
Refer to the Hoval System Technology to find which functions and hydraulic arrangements can be implemented.

Further information
See “Hoval TopTronic® E module expansions” chapter

TopTronic® E controller modules, control/room control modules, HovalConnect, wall casing, sensor
see separate chapter

Technical data

TopTronic® E buffer module

Type	TTE-PS
• Power supply max.	230 V AC +6/-10 %
• Frequency	50-60 Hz
• Min. power consumption	0.8 W
• Max. power consumption	7.8 W
• Fuse	10 A slow-blow
Output (low voltage)	
• Electromechanical relays	3
Output (extra-low voltage)	
• Signal output PWM or 0-10V	1
Switching capacity	
• Electromechanical relays	3 A
Input (low voltage)	
• Optocoupler input	1
Inputs (extra-low voltage)	
• Input 0-10 V	1
• Inputs sensors	2
• Inputs flow rate sensor	1
• Pulse input	1 (can be switched over to sensor)
Expansion (module expansion)	
• Max. number	2
Casing	
• Installation	Top hat rail mounting
• Dimensions (W x H x D) incl. plug	150 x 100 x 75 mm
• Ambient temperature (during operation)	0…50 °C
• Humidity (in operation)	20...80 % RH, non-condensing
• Storage temperature	-20...60 °C
Bus system (Hoval CAN bus)	
• Capacity	max. 4 control modules / 3 control modules + 1 gateway
• Bus supply	yes
• Bus line	4-wire bus
• Bus length	twisted, shielded, max. 100 m
• Line cross-section	min. 0.5 mm²
• Cable type (recommended)	JY-(ST) 2 x 2 x 0.6
Other bus interfaces	Internal unit bus (master)
Miscellaneous	
• Spring reserve	approx. 10 years, battery buffered
• Type of protection	IP 20
• Protection class	I – EN 60730
• Plug types	Rast 5 (coloured, coded)

Electrical connection

TopTronic® E buffer module

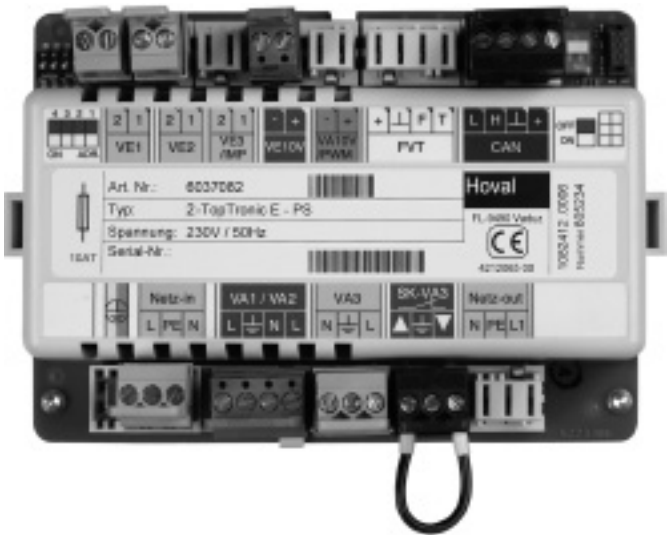

Description

TopTronic® E measuring module

- Controller module with MBus interface for reading out heat meters (max. 16 MBus participants)
- Counter values can be used in different functions in the controller system, and displayed
- Voltage: 12 VDC 120 mA
- Type of protection: IP20
- Connection technology executed as plug-in screw terminals
- Update capability of the controller software
- Controller module suitable for cabinet installation by ability to install on DIN rail 35 x 15 x 2.2 mm or 35 x 7.5 x 2.2 mm
- Many possible uses via the Hoval CAN bus

Notice
Operation of the controller module is generally via the TopTronic® E control module installed in the heat generator!

Inputs and outputs
- MBus interface for reading out heat meters (max. 16 MBus participants)

Notice
If an electrical power supply is required for the heat meter, it is not provided by the TopTronic® E measuring module

TopTronic® E measuring module

Use
- For accommodating different MBus-capable heat meters in the bus system

Notice
Electrical power supply via the Hoval CAN bus, i.e. using the measuring module reduces the max. number of room control modules that can be connected to the bus system!
List of compatible MBus devices see chapter “Energy/heat quantity balancing”.

Delivery
- TopTronic® E measuring module incl. 2x mounting clips for DIN rail attachment
- Plug set for controller module
  - Plug for MBus
  - Plug for Hoval CAN bus
- DIN rail with fitting accessories

Part. No.

	Part No.

TopTronic® E measuring module TTE-MWA
Controller module with MBus interface for reading out heat meters (max. 16 MBus participants)
 	
Consisting of:
- TopTronic® E measuring module incl. 2x mounting clips for DIN rail attachment
- Plug set for controller module:
  - Plug for MBus
  - Plug for Hoval CAN bus,
- DIN rail with fitting accessories
	6034 574

Technical data

TopTronic® E measuring module

Type	TTE-MWA
• Power supply max.	12 VDC +6/-10 %
• Min. power consumption	0.6 W
• Max. power consumption	< 2.5 W
Casing	
• Installation	DIN rail mounting
• Dimensions (W x H x D) incl. plug	70 x 92 x 35 mm
• Ambient temperature (during operation)	0…50 °C
• Humidity (in operation)	20...80% RH, non-condensing
• Storage temperature	-20...60 °C
Bus system (Hoval CAN bus)	
• Capacity, electrical power supply 12 V DC-TTE-MWA module	120 mA, > 120 mA external lectrical power supply required, depending on the MBus terminal units
• Bus supply	No
• Bus line	4-wire bus
• Bus length	twisted, shielded, max. 100 m
• Line cross-section	min. 0.5 mm²
• Cable type (recommended)	JY-(ST) 2 x 2 x 0.6
MBus interface	
MBus voltage	30 V
Transfer rate	300 to 2400 baud
Electrical isolation	No
Capacity	maximum 16 terminal units (standard loads 1.5 mA each)
MBus protocol	according to list of Hoval documentation
Bus length	twisted, shielded, max. 500 m with line cross section 0.8 mm²
Line cross-section	min 0.8 mm²
Miscellaneous	
• Type of protection	IP 20
• Protection class	II – EN 60730
• Plug types	Plug-in terminal technology

Electrical connection

TopTronic® E measuring module

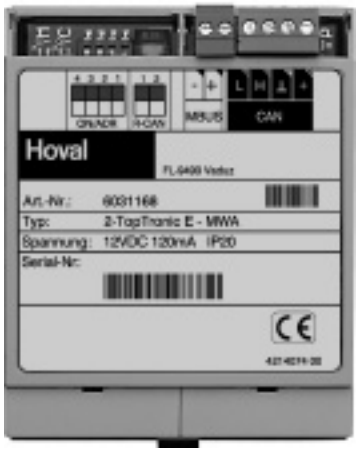

Description

TopTronic® E module expansion Heating circuit

- Expansion to the inputs and outputs of a TopTronic® E basic module heat generator or the heating circuit/hot water module for implementing the following functions:
  - 1 heating/cooling circuit without mixer or
  - 1 heating/cooling circuit with mixer
- Max. 1 module expansion possible per basic module heat generator
- Max. 2 module expansions per heating circuit/hot water module possible
- Connection technology executed as plug-in screw terminals in coded RAST-5 design
- Connection to basic module using ribbon cable and mains connector set (max. distance between basic module and module expansion 10 cm)
- Control unit suitable for cabinet installation (mounting on DIN rail 35 x 15 x 2.2 mm)
- Protection via the basic module (10 A microfuse)

Notice
Module expansions must be installed directly next to the controller module!

Inputs and outputs
- 3 variable sensor inputs:
  - 2x variable input for connection of a sensor
  - 1x variable input for connection of a sensor or pulse sensor
- 0-10V input, e.g. for connecting to heat zone control systems
- 0-10V or PWM output for controlling a variable-speed pump
- Connection of a flow rate sensor (or pulse sensor), e.g. for heat metering at the heating circuit
- Variable 230V 3-point output, e.g. for controlling the mixer
- Variable 230V output, e.g. for controlling the circulating pump
- 230V optocoupler input connected in series to the variable 230V output, e.g. for connecting a flow temperature guard for monitoring underfloor heating systems

Functions
- Refer to the product description of the controller module to which the module expansion is attached to find which functions can be implemented

Use
- For expanding the functions on the connected controller module
- Refer to the Hoval System Technology to find which functions and hydraulic arrangements can be implemented

Delivery
- TopTronic® E module expansion
- DIN rail with fitting accessories
- Ribbon cable for connecting the device bus to the controller module
- Connection set for connecting the controller module to the mains voltage
- 1x contact sensor ALF/2P/4/T, L = 4.0 m
- Basic connector set for module expansions
  - Plug for 230V output (VA3) (direct circuit pump, mixer circuit pump)
  - Plug for 2x 230V output (mixer) (VA1/VA2)
  - Plug for optocoupler input (SK-VA3) (flow temperature controller)
  - 2x plug for sensor (VE1/VE2)
  - Plug for 0-10V or PWM output (VA10V)

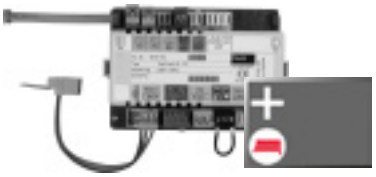

TopTronic® E module expansion heating circuit

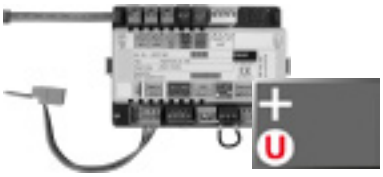

TopTronic® E module expansion Universal

TopTronic® E module expansion heat balancing

Notice
The supplementary plug set may have to be ordered to implement functions differing from the standard!

TopTronic® E module expansion Heat balancing

- Expansion to the inputs and outputs of a TopTronic® E basic module heat generator for implementing the following function
  - Calculation of the total energy consumption
  - Calculation of the heat generator energy for heating
  - Calculation of the heat generator energy for hot water
- Max. 1 module expansion possible per TopTronic® E basic module heat generator
- Connection technology executed as plug-in screw terminals in coded Rast-5 design
- Connection to basic module using ribbon cable and mains connector set (max. distance between basic module and module expansion 10 cm)
- Controller module suitable for cabinet installation (mounting on DIN rail 35 x 15 x 2.2 mm)
- Protection via the basic module (10 A microfuse)

Notice
Module expansions must be installed directly next to the controller module!

Inputs and outputs
- 3 variable sensor inputs
  - 2x variable input for connection of a sensor
  - 1x variable input for connection of a sensor or pulse sensor
- 0-10V input
- 0-10V or PWM output
- Connection of a flow rate sensor (vortex or pulse sensor), e.g. for heat metering
- Variable 230V 3-point output
- Variable 230V output
- 230V optocoupler input connected in series to the variable 230V output

Functions
- Refer to the product description of the controller module to which the module expansion is attached to find which functions can be implemented

Use
- For expanding the functions on the connected controller module
- Refer to the Hoval System Technology to find which functions and hydraulic arrangements can be implemented

Delivery
- TopTronic® E module expansion
- DIN rail with fitting accessories
- Ribbon cable for connecting the device bus to the controller module
- Connection set for connecting the controller module to the mains voltage
- 3x contact sensor ALF/2P/4/T, L = 4.0 m
- Complete plug set for module expansions

Notice
Flow rate sensor DN 8-32 must be ordered separately (depending on the maximum output to be measured)

TopTronic® E module expansion Universal

- Expansion to the inputs and outputs of a TopTronic® E basic module heat generator or a controller module (heating circuit/hot water module, solar module, buffer module) for implementing various functions
- Max. 1 module expansion possible per TopTronic® E basic module heat generator
- Max. 2 module expansions per heating circuit/hot water module, solar module, buffer module possible

Description

- Connection technology executed as plug-in screw terminals in coded RAST-5 design
- Connection to controller module using ribbon cable and mains connector set (max. distance between basic module and module expansion 10 cm)
- Controller module suitable for cabinet installation (mounting on DIN rail 35 x 15 x 2.2 mm)
- Protection via the basic module (10 A microfuse)

Notice
Module expansions must be installed directly next to the controller module!

Inputs and outputs
- 3 variable sensor inputs:
  - 2x variable input for connection of a sensor
  - 1x variable input for connection of a sensor or pulse sensor
- 0-10V input
- 0-10V or PWM output for controlling a variable-speed pump
- Connection of a flow sensor (or pulse sensor)
- Variable 230V 3-point output
- Variable 230V output
- 230V optocoupler input connected in series to the variable 230V output

Functions
- Refer to the product description of the controller module to which the module expansion is attached to find which functions can be implemented

Use
- For expanding the functions on the connected controller module
- Refer to the Hoval System Technology to find which functions and hydraulic arrangements can be implemented

Delivery
- TopTronic® E module expansion
- DIN rail with fitting accessories
- Ribbon cable for connecting the device bus to the controller module
- Connection set for connecting the controller module to the mains voltage
- Complete plug set for module expansion

Part No.

TopTronic® E module expansions Heating circuit, heat balancing, universal	Part No.

TopTronic® E module expansion heating circuit TTE-FE HK
Expansion to the inputs and outputs of the basic module heat generator or the heating circuit/domestic hot water module for implementing the following functions:
- 1 heating/cooling circuit w/o mixer or
- 1 heating/cooling circuit with mixer
 	
Consisting of:
- TopTronic® E module expansion
- top hat rail with fitting accessories
- ribbon cable for connecting the
- device bus to the controller module
- connection set for connecting the
- controller module to the mains voltage
- 1 pce. contact sensor ALF/2P/4/T, L = 4.0 m
- basic plug set for module expansions:
  - Plug for 230 V output (VA3) (direct circuit pump, mixer circuit pump)
  - Plug for 2x 230V output (mixer) (VA1/VA2)
  - Plug for optocoupler input (SK-VA3) (flow temperature monitor)
  - 2x plugs for sensors (VE1/VE2)
  - Plug for 0-10V or PWM output (VA10V)
	6034 576

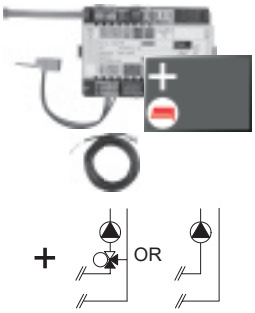

Notice
The supplementary plug set may have to be ordered to implement functions differing from the standard!

Supplementary plug set for controller modules and module expansion TTE-FE HK Consisting of Rast-5 mating plugs for connecting further sensors and actuators on the controller module or on the module expansion. The controller module is already equipped with a basic plug set, the supplementary plug set is required for advanced functions. Consisting of: - Plug for mains out - Plug for sensor (variable input) (VE3) - Plug for 0-10 V input (VE10V) - Plug for flow rate sensor (FVT)	6034 503

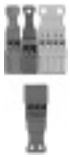

TopTronic® E module expansion Universal TTE-FE UNI Expansion to the inputs and outputs of a controller module (basic module heat generator, heating circuit/domestic hot water module, solar module, buffer module) for implementing various functions Consisting of: - TopTronic® E module expansion - top hat rail with fitting accessories - ribbon cable for connecting the device bus to the controller module - connection set for connecting the controller module to the mains voltage - complete plug set for module expansions	6034 575

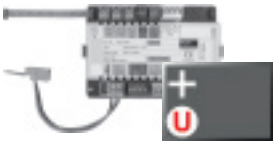

Notice
Refer to the Hoval System Technology to find which functions and hydraulic arrangements can be implemented.

Part No.

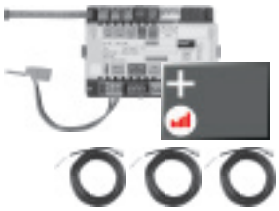

	Part No.
TopTronic® E module expansion heating circuit incl. energy balancing TTE-FE HK-EBZ Expansion to the inputs and outputs of the basic module heat generator or the heating circuit/domestic hot water module for implementing the following functions: - 1 heating/cooling circuit w/o mixer or - 1 heating/cooling circuit with mixer in each case incl. energy balancing Consisting of: - TopTronic® E module expansion - 3 pcs. contact sensor ALF/2P/4/T with length 4.0 m - complete plug set for module expansions - top hat rail with fitting accessories - ribbon cable for connecting the device bus to the controller module - connection set for connecting the - controller module to the mains voltage	6037 062

Notice
The continuous flow sensor set must be ordered as well.

Sets flow rate sensor
- Used in combination with the module expansion heat accounting or var. controller modules for heat metering
- Flow sensor supplies the current flow rate as well as the current temperature to the measuring point

Consisting of:
- flow rate sensor
- connection cable
- Rast5 plug for connecting to TopTronic® E

Plastic housing

Unit of measure	Connection	Flow rate l/min	
DN 8	G ¾″	0.9-15	6038 526
DN 10	G ¾″	1.8-32	6038 507
DN 15	G 1″	3.5-50	6038 508
DN 20	G 1¼″	5-85	6038 509
DN 25	G 1½″	9-150	6038 510

Brass housing

Unit of measure	Connection	Flow rate l/min	
DN 10	G 1″	2-40	6042 949
DN 32	G 1½″	14-240	6042 950

Technical data

TopTronic® E module expansions
Heating circuit, heat balancing, universal

Type	TTE-FE HK / TTE-WMZ/EBZ / TTE-FE UNI
• Power supply max.	230 V AC +6/-10 %
• Frequency	50-60 Hz
• Min. power consumption	0.2 W
• Max. power consumption	1.8 W
• Fuse	none - protection via controller module
Output (low voltage)	
• Electromechanical relays	3
Output (extra-low voltage)	
• Signal output PWM or 0-10 V	1
Switching capacity	
• Electromechanical relays	3 A
Input (low voltage)	
• Optocoupler input	1
Inputs (extra-low voltage)	
• Input 0-10 V	1
• Inputs sensors	2
• Inputs flow rate sensor	1
• Pulse input	1 can be switched over
Expansion (module expansion)	
• Max. number	-
Casing	
• Installation	Top hat rail mounting
• Dimensions (W x H x D) incl. plug	150 x 100 x 75 mm
• Ambient temperature (during operation)	0…50 °C
• Humidity (in operation)	20...80 % RH, non-condensing
• Storage temperature	-20...60 °C
Bus system (Hoval CAN bus)	
• Capacity	-
• Bus supply	-
• Bus line	-
• Bus length	-
• Line cross-section	-
• Cable type (recommended)	JY-(ST) 2 x 2 x 0.6
Other bus interfaces	Internal unit bus (master)
Miscellaneous	
• Type of protection	IP 20
• Protection class	I – EN 60730
• Plug types	Rast 5 (coloured, coded)

Electrical connection
TopTronic® E module expansions

TopTronic® E module expansion
Heating circuit

TopTronic® E module expansion
Heat balancing

TopTronic® E module expansion
Universal

Description

TopTronic® E module expansion Heating circuit district heating

- Expansion to the inputs and outputs of a basic module (basic module district heating/ fresh water, basic module district heating com) for carrying out various functions
  - 1 heating circuit without mixer
  - 1 heating circuit with mixer
- Max. 5 module expansions possible per basic module
- Connection technology executed as plug-in screw terminals in coded Rast5 design
- Ribbon cable for connecting the device bus to the controller module
- Controller module suitable for cabinet installation (mounting on DIN rail 93 x 125 x 95 mm)
- Protection via the basic module

Notice
Module expansions must be installed directly next to the controller module!

Inputs and outputs
- 3 variable sensor inputs
  - 2x variable input for connection of a sensor
  - 1x variable input for connection of a sensor or pulse sensor
- 0-10V input
- Variable 230V 3-point output, e.g. for controlling the mixer
- Variable 230V output, e.g. for controlling the circulating pump
- 230V optocoupler input connected in series to the variable 230V output, e.g. for connecting a flow temperature guard for monitoring underfloor heating systems

Functions
- Refer to the product description of the controller module to which the module expansion is attached to find which functions can be implemented

Use
- For expanding the functions on the connected controller module
- Refer to the Hoval System Technology to find which functions and hydraulic arrangements can be implemented

Delivery
- TopTronic® E module expansion district heating
- DIN rail with fitting accessories
- Ribbon cable for connecting the device bus to the controller module
- Connection set for connecting the controller module to the mains voltage
- 1x contact sensor ALF/1.1P/2.5/T, L = 2.5 m
- Basic plug set for module expansion district heating
  - Mains_in
  - Plug for 230V output (direct circuit pump, mixer circuit pump)
  - Plug for 2x 230V output (mixer)
  - Plug for optocoupler input (flow temperature controller)
  - 2x plug for sensor
  - Plug for 0-10V input

TopTronic® E module expansion heating circuit district heating

TopTronic® E module expansion hot water district heating

TopTronic® E module expansion Universal district heating

Notice
The supplementary plug set may have to be ordered to implement functions differing from the standard!

TopTronic® E module expansion Hot water district heating

- Expansion to the inputs and outputs of a TopTronic® E basic module district heating/ fresh water, district heating com for implementing a hot water circuit
- Max. 5 module expansions per TopTronic® E basic module district heating/fresh water, district heating possible
- Connection technology executed as plug-in screw terminals in coded Rast-5 design
- Connection to basic module using ribbon cable
- Controller module suitable for cabinet installation (mounting on DIN rail 93 x 125 x 95 mm)
- Protection via the basic module

Notice
Module expansions must be installed directly next to the controller module!

Inputs and outputs
- 3 variable sensor inputs:
  - 2x variable input for connection of a sensor
  - 1x variable input for connection of a sensor or pulse sensor
- 0-10V input
- Variable 230V 3-point output
- Variable 230V output, e.g. for controlling the hot water pump
- 230V optocoupler input connected in series to the variable 230V output

Functions
- Refer to the product description of the controller module to which the module expansion is attached to find which functions can be implemented

Use
- For expanding the functions on the connected controller module
- Refer to the Hoval System Technology to find which functions and hydraulic arrangements can be implemented

Delivery
- TopTronic® E module expansion district heating
- DIN rail with fitting accessories
- Ribbon cable for connecting the device bus to the controller module
- Connection set for connecting the controller module to the mains voltage
- 2x immersion sensor TF/1.1P/2.5/6T, L = 2.5 m
- Basic plug set for module expansion district heating
  - Mains_in
  - Plug for 230V output (direct circuit pump, mixer circuit pump)
  - Plug for 2x 230V output (mixer)
  - Plug for optocoupler input (flow temperature controller)
  - 2x plug for sensor
  - Plug for 0-10V input

Notice
The supplementary plug set may have to be ordered to implement functions differing from the standard!

TopTronic® E module expansion Universal district heating

- Expansion to the inputs and outputs of a basic module district heating or a basic module district heating/fresh water for implementing various functions
- Max. 5 module expansions are possible per basic module
- Connection technology executed as plug-in screw terminals in coded RAST-5 design

Description

- Connection to controller module using ribbon cable
- Controller module suitable for cabinet installation (mounting on DIN rail 93 x 125 x 95 mm)
- Protection via the basic module

Notice
Module expansions must be installed directly next to the controller module!

Inputs and outputs
- 3 variable sensor inputs:
  - 2x variable input for connection of a sensor
  - 1x variable input for connection of a sensor or pulse sensor
- 0-10V input
- Variable 230V 3-point output
- Variable 230V output
- 230V optocoupler input connected in series to the variable 230V output

Functions
- Refer to the product description of the controller module to which the module expansion is attached to find which functions can be implemented

Use
- For expanding the functions on the connected controller module
- Refer to the Hoval System Technology to find which functions and hydraulic arrangements can be implemented

Delivery
- TopTronic® E module expansion district heating
- DIN rail with fitting accessories
- Ribbon cable for connecting the device bus to the controller module
- Connection set for connecting the controller module to the mains voltage
- Complete plug set for module expansions

Part No.

TopTronic® E module expansions Heating circuit, hot water, universal district heating	Part No.
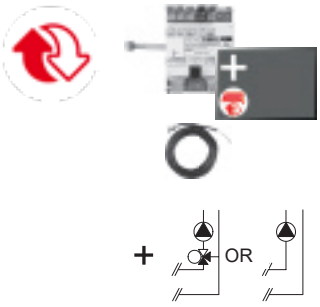 **TopTronic® E module expansion heating circuit district heating TTE-FE HK FW** Expansion to the inputs and outputs of the basic module district heating/fresh water or basic module district heating com for carrying out the following functions: - 1 heating/cooling circuit w/o mixer or - 1 heating/cooling circuit with mixer Consisting of: - TopTronic® E module expansion district heating - top hat rail with fitting accessories - ribbon cable for connecting the device bus to the controller module connection set for connecting the controller module to the mains voltage - 1 pce. contact sensor ALF/1.1P/5/T with length 2.5 m - complete plug set for module expansions district heating	6038 119
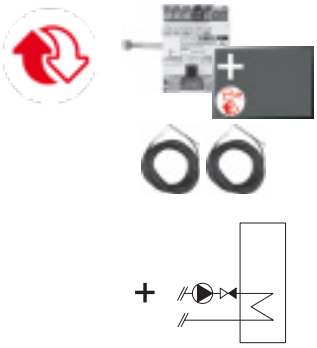 **TopTronic® E module expansion hot water district heating TTE-FE WW FW** Expansion to the inputs and outputs of the basic module district heating/fresh water or basic module district heating com for implementing a hot water circuit Consisting of: - TopTronic® E module expansion district heating - top hat rail with fitting accessories - ribbon cable for connecting the device bus to the controller module - connection set for connecting the controller module to the mains voltage - 2 pcs. immersion sensor TF/1.1/2.5/T with length 2.5 m - complete plug set for module expansions district heating	6038 120
 **TopTronic® E module expansion universal district heating TTE-FE UNI FW** Expansion to the inputs and outputs of the basic module district heating/fresh water or basic module district heating com for carrying out the following functions Consisting of: - TopTronic® E module expansion district heating - top hat rail with fitting accessories - ribbon cable for connecting the device bus to the controller module - connection set for connecting the controller module to the mains voltage - complete plug set for module expansions district heating	6038 117

Notice
Refer to the Hoval System Technology to find which functions and hydraulic arrangements can be implemented.

Technical data

TopTronic® E module expansions district heating

Heating circuit direct heating circuit, hot water direct heating, universal district heating

Type	TTE-FE FW HK / TTE-FE FW WW / TTE-FE FW UNI
• Power supply max.	230 V AC +6/-10 %
• Frequency	50-60 Hz
• Min. power consumption	0.8 W
• Max. power consumption	1.8 W
• Fuse	none - protection via controller module
Output (low voltage)	
• Electromechanical relays	3
Switching capacity	
• Electromechanical relays	5 A
Input (low voltage)	
• Optocoupler input	1
Inputs (extra-low voltage)	
• Input 0-10 V	1
• Inputs sensors	2
• Pulse input	1 can be switched over
Expansion (module expansion)	
• Max. number	-
Casing	
• Installation	Top hat rail mounting
• Dimensions (W x H x D) incl. plug	150 x 100 x 75 mm
• Ambient temperature (during operation)	0…50 °C
• Humidity (in operation)	20...80 % RH, non-condensating
• Storage temperature	-20...60 °C
Bus system (Hoval CAN bus)	
• Capacity	-
• Bus supply	None
• Bus line	-
• Bus length	twisted, shielded, max. 100 m
• Line cross-section	min. 0.5 mm²
• Cable type (recommended)	JY-(ST) 2 x 2 x 0.6
Other bus interfaces	Internal unit bus (master)
Miscellaneous	
• Type of protection	IP 20
• Protection class	I – EN 60730
• Plug types	Rast 5 (coloured, coded)

Electrical connection

TopTronic® E module expansions

TopTronic® E module expansion
heating circuit district heating

TopTronic® E module expansion
hot water district heating

TopTronic® E module expansion
Universal district heating

Description

TopTronic® E control module black

- Colour touchscreen 4.3 inch with black high-gloss trim
- Resolution: 480 x 320
- Connection to the Hoval bus system via RJ45 plug connection or plug terminals (max. 0.75 mm²)
- Flat design with flexible installation options
- Installation
  - in the control panel of the heat generator
  - in the Hoval wall casing
  - in the front of the control panel
  - on the wall with surface mounting frame (deep control module incl. frame approx. 25 mm)
  - on the wall using wall mounting plate with concealed sockets (deep control module incl. mounting plate approx. 12 mm)

Notice
Supplied accessories for installation of device in the front of the control panel. Take account of additional accessories for alternative installation!

TopTronic® E control module

TopTronic® E room control module


easy white


comfort white


comfort black

- Commissioning wizard for simple configuration and parameter setting of the plant
- Operation of all controller modules connected to the bus system (basic, solar, buffer module, etc.)
- Emission measurement and manual mode
- LED for displaying the current system status
- Automatic dimming depending on the ambient light
- User-friendly user interface and menu system
- Activation of functions and display texts depending on the user level
- Plant-specific naming of heating and hot water circuits possible
- Display of all information in plain text and in different languages
- Display of detailed plant information
- Extensive fault message management by plain text and categories
- Service and maintenance function
- Operating mode selection incl. configurable week and day programs
- Operation of all heating and hot water circuits connected to the bus system
- Rights management for heating and hot water circuits incl. activation of the common operating mode
- Efficient control of the heating installation by simple working with day programs
- Analysis function (outside temperature, room temperature, solar yield curves, etc.)
- Customer-specifically configurable start screen for displaying
  - Time and date
  - Lunar phase
  - Heat generator temperature
  - Hot water temperature
  - Active day and basic program incl. temperature profile
  - Output and consumption of a heating/hot water circuit or of the heat generator (possible in combination with flow rate sensors)
  - Collector temperature (in combination with solar module)
- Display of the current weather or weather forecast (only possible in combination with HovalConnect)

Delivery
- TopTronic® E control module black
- Clamping device control module
- Clamping device adapter control module
- CAN cable RJ45/Rast-5, l = 500 cm

TopTronic® E room control module

- Colour touchscreen 4.3 inch with high-gloss trim
  - Room control module easy white
  - Room control module comfort either white or black
- Resolution: 480 x 320
- Connection to the Hoval bus system via RJ45 plug connection or plug terminals (max. 0.75 mm²)
- Installation on the wall
  - with a surface mounting frame (deep room control module incl. frame approx. 25 mm)
  - with a wall mounting plate with concealed sockets (deep room control module incl. mounting plate approx. 12 mm)
- Optimum mounting height in the room: 1500-1600 mm
- LED for displaying the current system status
- Automatic dimming depending on the ambient light
- User-friendly user interface and menu system
- Plant-specific naming of heating and hot water circuits possible
- Display of all information in plain text and in different languages
- Display of detailed plant information
- Extensive fault message management by plain text and categories
- Service and maintenance function
- Operating mode selection incl. configurable week and day programs
- Room sensor installed

Delivery
- TopTronic® E room control module
- Surface-mounted assembly frame
- Design frame
- Wall mounting adapter
- Assembly material

TopTronic® E room control module easy white
- Room control module can only be allocated to a heating circuit
- Software with reduced range of functions for simple operation of the room temperature and selection of the basic program without problems

TopTronic® E room control module white or black
- Operation of all heating and hot water circuits connected to the bus system
- Rights management for heating and hot water circuits incl. activation of the common operating mode
- Efficient control of the heating installation by simple working with day programs
- Analysis function (outside temperature, room temperature, solar yield curves, etc.)
- Selection between different start-up screens possible during commissioning
- Customer-specifically configurable start screen for displaying
  - Time and date
  - Lunar phase
  - Heat generator temperature
  - Hot water temperature
  - Active day and basic program incl. temperature profile
  - Output and consumption of a heating/hot water circuit or of the heat generator (possible in combination with flow rate sensors)
  - Collector temperature (in combination with solar module)
- Display of the current weather or weather forecast (only possible in combination with HovalConnect)

Part No.

TopTronic® E control module	Part No.

TopTronic® E control module black
- For operation of all controller modules connected to the bus system (basic, solar, buffer modules, ecc.)
- Connection to the Hoval Bus system by RJ45 plug connection or plug-in terminals (max. 0.75 mm²)
- Flat design with flexible mounting option
- Mounting
  - in the control panel of the heat generator,
  - in the Hoval wall casing,
  - on the front of the control panel
- Colour touchscreen 4.3 inch with black high-gloss trim
- Customer-specific configuration of the start-up screen
- Display of the current weather or weather forecast (only possible in combination with HovalConnect)
 	
Consisting of:
- TopTronic® E control module black
- clamping device set for control module
- RJ45 Rast-5 CAN cable, L=500
	6043 844

Notice
Take account of additional accessories for alternative Take account of additional accessories for alternative installation!

TopTronic® E room control modules	

TopTronic® E room control module easy white
- Room control module for a heating circuit
- Software with a reduced range of functions for simple operation of the room temperature and unproblematic selection of the basic program
- For mounting on the wall
  - with an on-wall mounted installation frame (depth of room control module incl. frame approx. 25 mm)
  - with a wall-mounting plate for in-wall sockets (depth of room control module incl. mounting plate approx. 12 mm)
- Optimum mounting height: 1500-1600 mm
- Connection to the Hoval bus system by RJ45 plug connection or plug-in terminals (max. 0.75 mm²)
- Colour touchscreen 4.3 inch with white high-gloss trim
 	
Consisting of:
- TopTronic® E room control module white
- on-wall mounted installation frame white
- designer frame white
- wall-mounting adapter
- fitting accessories
	6037 071

Notice
Take account of additional accessories for alternative installation!

Part No.

	Part No.
	

TopTronic® E room control module comfort white
- Operation of all heating and domestic hot water circuits connected to the bus system
- Customer-specific configuration of the start-up screen
- Display of the current weather or weather forecast (only possible in combination with HovalConnect)
- Efficient control of the heating installation by simple working with day programs
- Analysis functions (outdoor temperature, room temperature, solar yield curves, etc.)
- For mounting on the wall
  - with an on-wall mounted installation frame (depth of room control module incl. frame approx. 25 mm)
  - with a wall-mounting plate for in-wall sockets (depth of room control module incl. mounting plate approx. 12 mm)
- Optimum mounting height: 1500-1600 mm
- Connection to the Hoval bus system by RJ45 plug connection or plug-in terminals (max. 0.75 mm^2)
- Colour touchscreen 4.3 inch with white high-gloss trim
 	
Consisting of:
- TopTronic® E room control module white
- on-wall mounted installation frame white
- designer frame white
- wall-mounting adapter
- fitting accessories
	6037 069

	

TopTronic® E room control module comfort black
- Operation of all heating and domestic hot water circuits connected to the bus system
- Customer-specific configuration of the start-up screen
- Display of the current weather or weather forecast (only possible in combination with HovalConnect)
- Efficient control of the heating installation by simple working with day programs
- Analysis functions (outdoor temperature, room temperature, solar yield curves, etc.
- For mounting on the wall
  - with an on-wall mounted installation frame (depth of room control module incl. frame approx. 25 mm)
  - with a wall-mounting plate for in-wall sockets (depth of room control module incl. mounting plate approx. 12 mm)
- Optimum mounting height: 1500-1600 mm
- Connection to the Hoval bus system by RJ45 plug connection or plug-in terminals (max. 0.75 mm^2)
- Colour touchscreen 4.3 inch with black high-gloss trim
 	
Consisting of:
- TopTronic® E room control module black
- on-wall mounted installation frame black
- designer frame black
- wall-mounting adapter
- fitting accessories
	6037 070

Notice
Take account of additional accessories for alternative installation!

Part No.

	Accessories	Part No.
	**Enhanced language package TopTronic® E** one SD card required per control module Consisting of the following languages: HU, CS, SL, RO, PL, TR, ES, HR, SR, JA, DA	6039 253
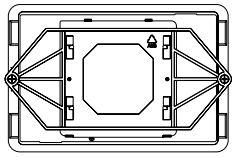	**Clamping device set for control module** Can be used for mounting the control module - in the Hoval wall casing - in front of the control panel, cut-out 136 x 88 mm with a material thickness of 0.5-6 mm, connection to the Hoval bus system either via RJ45 plug connection or via plug-in terminals (max. 0.75 mm²) Consisting of: - clamping device, - clamping device adapter for 138x92 mm (wall casing) material thickness (0.5–3 mm) Included in the scope of delivery for the TopTronic® E control module.	6041 812
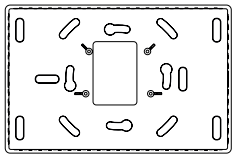	**On-wall mounted installation frame black** - Can be used for on-wall mounting of the control module/room control module black - depth of control module incl. on-wall mounted installation frame approx. 25 mm - colour matt black - connection to the Hoval bus system by RJ45 plug connection or plug-in terminals (max. 0.75 mm²) Consisting of: - On-wall mounting frame black - fixing accessories incl. screws for locking the control module Included in the scope of delivery for the TopTronic® E room control modules.	6035 797
	Wall installation adapter - Can be used for wall installation of the control module/room control module black or white - Very flat design possible - Depth of control module incl. on-wall mounted installation frame is only 13 mm - Use requires an existing in-wall socket or connection to the Hoval bus system is by plug-in terminals (max. 0.75 mm²) Included in the scope of delivery for the TopTronic® E room control modules.	2053 488

Technical data

TopTronic® E
control module / room control module

- Connection to the Hoval bus system via RJ45 plug connection or plug terminals (max. 0.75 mm²)
- Resolution: 480 x 320
- Voltage: 12 V DC 100 mA
- Humidity (in operation): 20...80 % RH, non-condensing

Dimensions

TopTronic® E
control module / room control module
(Dimensions in mm)

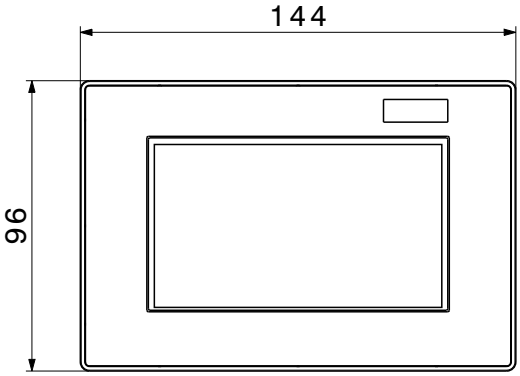

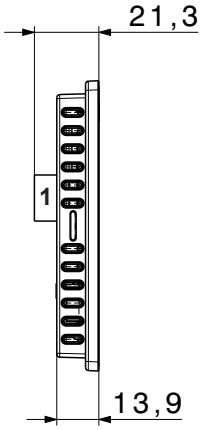

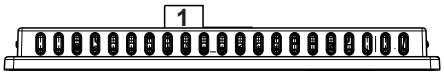

1 Removable RJ45 plug connection
Alternative: plug terminal (max. 0.75 mm²)

Dimensions

TopTronic® E
control module / room control module
Installation

Installation in control panel
(Clamping device is Included in the scope of delivery for the control module)
(Dimensions in mm)

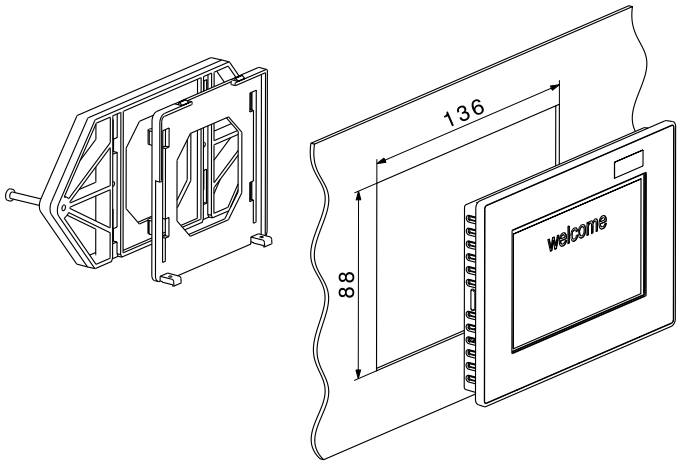

- Cut-out: 136 x 88 mm
- Material thickness: 0.5-6 mm
- Connection to the Hoval bus system either via RJ45 plug connection or plug terminals (max. 0.75 mm²)

Wall mounting with surface-mounting frame
(Surface-mounting frame is included in the scope of delivery for the room control modules)
(Dimensions in mm)

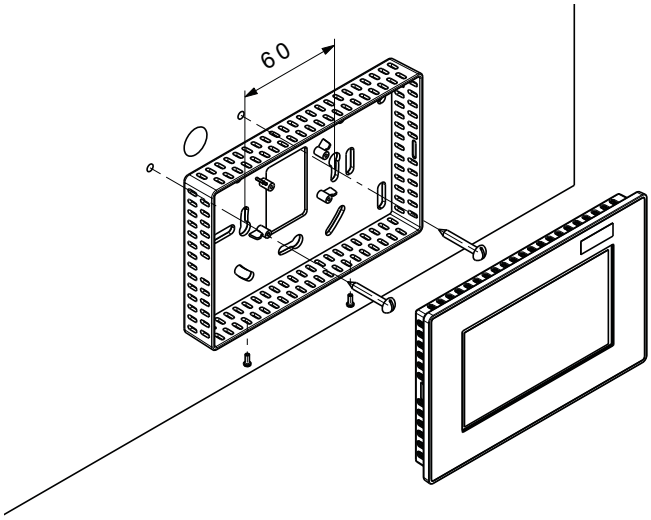

Wall mounting with wall mounting plate
with concealed sockets
(Wall mounting plate is included in the scope of delivery for the room control modules)
- Connection to the Hoval bus system via RJ45 plug connection or plug terminals (max. 0.75 mm²)

(Dimensions in mm)

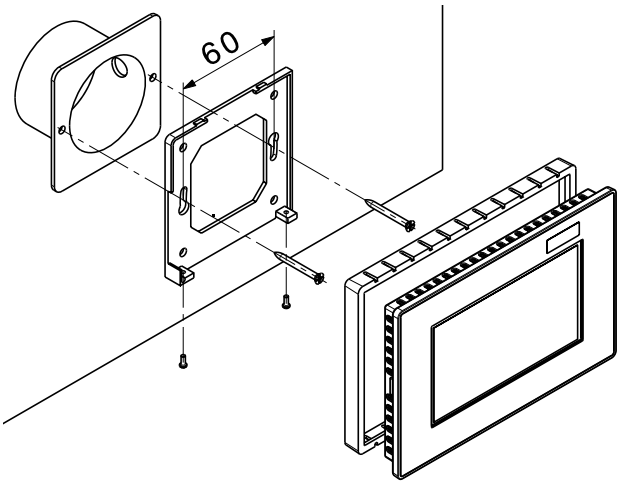

Description

HovalConnect

- App or browser access permits access to the entire TopTronic® E system
- High data security by special encryption of communication between the plant and Hoval server
- The app enables users to access and operate their Hoval heating system via smartphone from home or while travelling
- Simple changing of the required room temperature, day or basic program

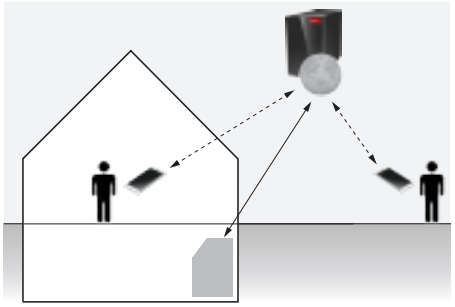

- The app can be downloaded free of charge via the iTunes Store for iOS devices and via the Google Play Store for Android devices
- Minimum requirements of the smartphone operating system:
  - Android 7.0 or higher
  - iOS 11 or higher
- Minimum requirements of the browser:
  - Chrome (latest version + previous version)
  - Firefox (latest version + previous version)
  - Safari (latest version + previous version)
  - Internet explorer (with limitations)
- Access is also possible by any computer or tablet PC using a browser, without the need to install any additional software
- **Additional functions on the Hoval server for the end user (HovalConnect domestic)**
  - Clear graphical user interface (dashboard) with end user display
  - Input of a e-mail contact for triggering alarms in case of faults on the heating system
  - Energy accounting for graphical representation of a plant's solar data
- **Additional functions on the Hoval server for the commercial end user (HovalConnect commercial) (dashboard)**
  - Clear graphical user interface (dashboard) with adapted displays (not available immediately)
  - Input of a e-mail contact for triggering alarms in case of faults on the heating system
  - Energy accounting for graphical representation of a plant's solar data
- Further optional additional functions on the Hoval server for the installer, contractor, etc. (not available immediately):
  - Several plants can be allocated to one user
  - Overview of all plants, switchover between map or list view with information about the plant status
  - Remote parameter setting with display of the parameters of a plant in a tree structure.

- The heating system / TopTronic® E is connected to the Internet either via a LAN cable or a WLAN-enabled gateway
  - Simple installation and configuration of the gateway
  - No configuration required on the router
  - Customer creates his/her personal user account on the Hoval server and registers his/her plant

Notice
Internet access is required for installation!

- 1 starter package required per Hoval bus system

Notice
Electrical power supply via the Hoval CAN bus or the mains adapter, i.e. using the module reduces the max. number of (room) control modules that can be connected to the bus system!

- Update capability of the gateway software
- Gateway is either mounted on the wall or placed on a surface without mounting
- Type of protection: IP20

Notice
The DIN rail mounting set must be ordered separately for installing the gateway in the heat generator or in the control panel!
Only the LAN version is allowed to be installed in the heat generator!
An e-mail alarm does not replace a fault monitoring system in case of critical applications.

HovalConnect LAN

- The heating system is connected to the Internet via a LAN cable to the router in the case of Var.1 – gateway installed in cellar – or via a 4-wire cable (Hoval CAN bus) to the cellar in the case of Var.2 – gateway installed in the living area.

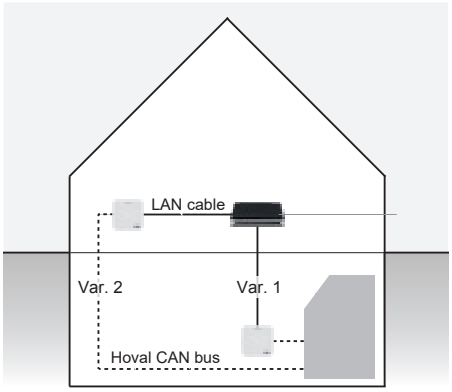

- Gateway electric power supply: 12 VDC 100 mA with LAN

HovalConnect available from summer 2019
Up to that point, TopTronic® E online is delivered - conversion to HovalConnect is carried out free of charge.

Delivery
- Gateway V2.0
- Wall mounting adapter white
- License key for HovalConnect incl. 2 years of use
- Cover for Gateway V2.0
- Fitting accessories for covering the gateway

HovalConnect WLAN

- Version same as HovalConnect LAN. Connection is wireless, however.
- For the WLAN version, the electrical power supply must be provided via the supplied mains adapter
- Heating system is connected to the home network via a supplied WLAN-capable gateway

Notice
Take account of maximum WLAN range of the router!

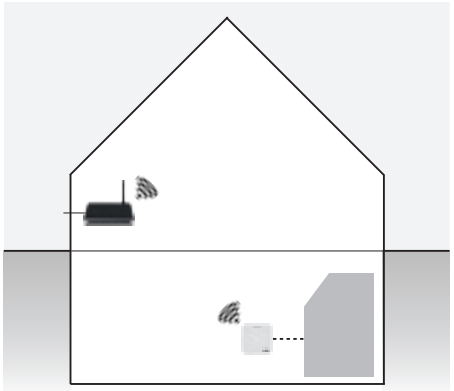

- Voltage: 12 VDC 200 mA with WLAN

Delivery
- Gateway V2.0
- Wall mounting adapter white
- License key for HovalConnect incl. 2 years of use
- WLAN antenna (matching Gateway V2.0)
- Cover for Gateway V2.0
- Fitting accessories for covering the gateway
- Mains adapter 12 V/6 W with cable, L = 1800 mm

Notice
A further use of the online service HovalConnect can be acquired as an option.

Part No.

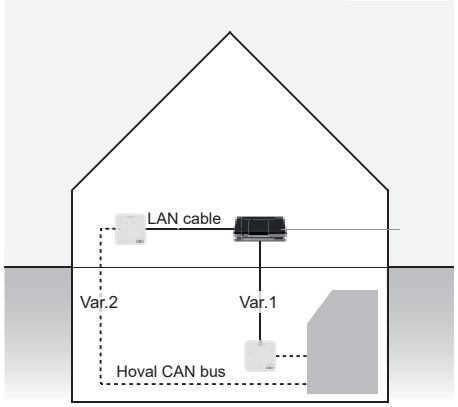

2 installation possibilities of the Gateway V2.0:
Var. 1: Installation in the basement, i.e. long LAN cable to the router
Var. 2: Installation in the living area, i.e. 4-wire cable (Hoval CAN bus) into the basement

HovalConnect	Part No.
HovalConnect starter LAN - App permits access to and operation of the Hoval heating system via smartphone and tablet PC from at home or when out and about - Easy change of the required room temperature, day or basic program - Additional functions via browser access (Hoval website with logon) for private end users (HovalConnect domestic starter LAN) or for commercial end users and, optionally, installers/contractors (HovalConnect commercial starter LAN) - LAN interface for connecting the Gateway V2.0 to the router of the home network - Incl. 2 years of use Consisting of: - Gateway V2.0 - wall-mounting adapter white - licence key for HovalConnect starter LAN - cover for Gateway V2.0 - fitting accessories for covering the Gateway	**HovalConnect available from summer 2019** Up to that point, TopTronic® E online is delivered - conversion to HovalConnect is carried out free of charge.
Notice A further use of the online service HovalConnect can be acquired as an option.	
HovalConnect domestic starter LAN	6049 496
HovalConnect commercial starter LAN	6049 495

Part No.

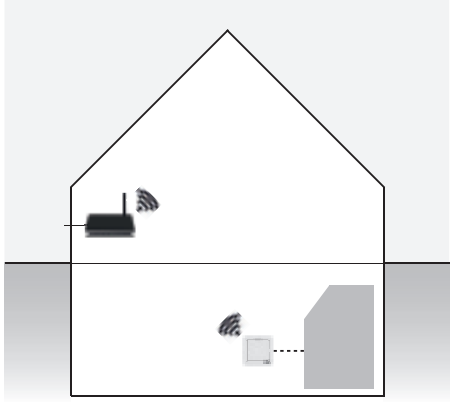

Notice
Take account of maximum WLAN range of the router!

	Part No.
HovalConnect starter WLAN - App permits access to and operation of the Hoval heating system via smartphone and tablet PC from at home or when out and about - Easy change of the required room temperature, day or basic program - Additional functions via browser access (Hoval website with logon) for private end users (HovalConnect domestic starter WLAN) or for commercial end users and, optionally, installers/contractors (HovalConnect commercial starter WLAN) - LAN interface or WLAN interface for connecting the Gateway V2.0 to the router of the home network - Incl. 2 years of use Consisting of: - Gateway V2.0 - wall-mounting adapter white - licence key for HovalConnect starter WLAN - WLAN antenna (matching Gateway V2.0) - cover for Gateway V2.0 - fitting accessories for covering the Gateway - Mains adapter 12 V/6 W with cable, L=1800 mm	
HovalConnect domestic starter WLAN	6049 498
HovalConnect commercial starter WLAN	6049 497

HovalConnect available from summer 2019
Up to that point, TopTronic® E online is delivered - conversion to HovalConnect is carried out free of charge.

Notice
A further use of the online service HovalConnect can be acquired as an option.

Part No.

	Part No.
Mains adapter for Gateway V2.0 - Plug-in mains adapter for external power supply of the Gateway V2.0 - required if the device is not powered via the Hoval CAN bus - supply via the Hoval CAN bus unless the max. number of control modules is exceeded - For the WLAN version, the electrical power supply must be provided via the supplied mains adapter - connection to Gateway V2.0 via a DC plug 5.5 x 2.1 x 10 mm - Only required as spare part.	2056 857
Top hat rail mounting set **incl. top hat rail for Gateway** For mounting the Gateway in the heat generator, in a wall casing or in a control panel Consisting of: - Top hat rail with fixing accessories - Top hat rail mounting adapter	6035 800

Technical data

HovalConnect - Gateway

Casing	
• Mounting	Top hat rail mounting
• Dimensions (W x H x D)	100 x 100 x 27 mm (incl. top-hat rail 42 mm)
• Dimensions RS485 (W x H x D)	155 x 100 x 47 mm (terminal block incl. top-hat rail 55 mm)
• Material	plastic
• Weight	approx. 500 g
Electrical safety	
• Protection type (according to EN 60529)	IP 20
• Complies with EN 50491-3	
• Safety extra-low voltage	SELV DC 24 V
EMC requirements	
• Complies with EN 61000-6-2, EN 61000-6-3, EN 50491-5-1, EN 50491-5-2 and EN 50491-5-3	
• According to EMC Directive (residential and functional building)	
Environmental conditions	
• Ambient temperature (during operation)	0…45 °C
• Storage temperature	-20...60 °C
• Humidity (in operation)	20...80% RH, non-condensing
Ethernet	
• 10BaseT (10Mbit/s)	
• Supported protocols: UDP/IP, TCP/IP, DHCP and static IP	
Power supply	
• External supply	LAN gateway: CAN bus WLAN gateway: mains adapter 12 V DC
• Power consumption	< 800 mW

Description

SMS remote control unit

- SMS remote control unit as simple telecontrol and detection system to the heating system
- For installation in a control panel
- Connection to all Hoval boilers possible
- 6 inputs (digital)
- 4 outputs
- Dimensions:
  L x W x H: 90 x 88 x 66 mm
- Appliance programming by Hoval according to the customers request
- SIM card is not supplied. Telephone network provider can be selected as required

Delivery

- Basic unit with small antenna
- Magnetic base antenna with 2.5 m antenna cable
- Programming cable
- Interface converter USB-RS232
- CD with programming software and operating manual

SMS remote control unit

System module SMS remote control unit

- SMS remote control unit as simple telecontrol and detection system to the heating system
- Pre-installed in the control panel, for wall mounting
- Connection to all Hoval calorifiers possible
- System module contains a maintenance switch
- Installation in wall casing
- SMS remote switching device via relay contacts directly wired to connection terminals
- 6 inputs (digital), of which 3 pre-wired
- 4 outputs, of which 2 pre-wired
- Dimensions:
  L x W x H: approx. 250 x 175 x 100 mm
- SIM card is not supplied. Telephone network provider can be selected as required

Delivery

- Small antenna
- Magnetic base antenna with 2.5 m antenna cable
- Programming cable
- Interface converter USB-RS232
- CD with programming software and operating manual

System module SMS remote control unit

Part No.

TopTronic® E SMS remote control unit	Part No.
 **SMS remote control unit** Remote control and reporting system for heating system, communication via SMS Consisting of: - basic unit with aerial small - magnet aerial base with 2.5 m cable - cable for programming RS232 - interface converter USB-RS232 - CD with programming software SIM card for GSM connection is not included! (Free choice of telephone network)	6018 867
 **System component SMS remote control unit** Remote control and signalling system for the heating installation pre-mounted in control panel for wall mounting, communication via SMS Consisting of: - basic unit in casing with maintenance switch - volt-free relay contacts and small aerial - magnet aerial base with 2.5 m cable - cable for programming RS232 - interface converter USB-RS232 - CD with programming software SIM card for GSM connection is not included! (Free choice of telephone network) See technical data for more information!	6022 797

Technical data

SMS remote control unit

The SMS remote control unit functions as simple telecontrol and detection system to the heating system. The connection is established via a GSM link, in which case the telephone network or provider can be selected as required (depending on the SIM card used). Communication to the heating system is via SMS throughout. The SIM card is not supplied with the device and must be added separately.

The connection can be made to all Hoval boilers; the following essential functions, amongst others, can be implemented with the TopTronic® E control units:
- Switching to standby mode or automatic (requires free inputs on the TopTronic® E)
- SMS message if there is a fault on the boiler
- Fax message and e-mail only possible with provider support
- etc.

Dimensions
- L x W x H: 90 x 88 x 60 mm (DIN rail mounting)

Delivery
- Basic unit with small antenna
- Magnetic base antenna with 2.5 m antenna cable
- Programming cable RS232
- Interface converter USB-RS232
- CD with programming software

Technical data

• Operating voltage	AC 110-240 VA 50/60 Hz
• Power consumption:	8 VA/6 W
• Number of outputs:	4 x changeover contact (with pulse capability for adjustable time)
• Switching capacity outputs:	10 A 250 V
• Number of inputs:	6 x digital
• Inputs switch-on threshold:	85 V~

Ambient conditions

• Tu:	-25...+55 °C
• Rel. humidity:	5 ...95 % (non-condensing)
• Protection rating:	IP20

Detailed list of functions:
Connection of all inputs and outputs of the Hoval boiler or heating system
- 6 digital inputs
- 4 relay outputs with changeover contacts (with pulse capability for adjustable time)

Interrogation and remote control
- SMS status query to all inputs and outputs
- SMS remote control of the outputs (by predefined message)

Power failure detection
- Alarm message via SMS if there is an electrical power failure or the voltage is restored at the remote control unit, and thus also at the heating system

Cyclical or event-driven feedback
- Regular control messages of the SMS remote control unit possible with a message
- Notification in case of a change of status at inputs on the remote control unit via an SMS status change

Signalling targets and cyclical forwarding
- Telephone directory in the device stores up to 50 different receiver numbers
- Cyclical alarm forwarding to up to 5 different receivers, according to the selected sequence

Safety
- Password protection can be set
- Confirmation message after activation of an output

Programming software for simple configuration of the unit
- Simple configuration with supplied programming software
- Setting the required language (10 languages, can be expanded)
- Individually adaptable messages

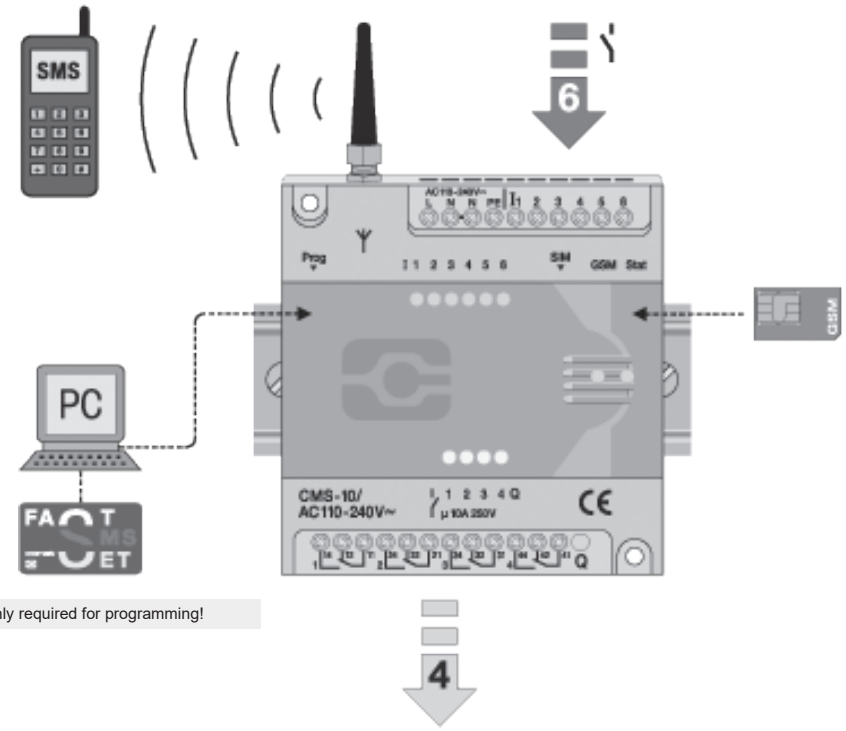

PC only required for programming!

Description

BMS module 0-10 V/ OT - OpenTherm TopGas® (building management system)

- BMS module for linking to the Hoval TopGas® comfort, TopGas® classic, TopGas® (35-120) by connecting the control voltage (0-10 V).

Functions

- Interface converts the 0-10 V signal into a reference temperature value or a reference output value for controlling a TopGas®
- Specification of the reference temperature to the Hoval TopGas® condensing gas boiler
- Specification of the reference output to the Hoval TopGas® condensing gas boilers
- The type of control of the Hoval TopGas® can be configured by the DIP switches.

BMS module 0-10 V / OT - OpenTherm

Part No.

	Part No.
Only in combination with TopGas® comfort, TopGas® classic, TopGas® (35-120) (OpenTherm bus)	
BMS module 0-10 V/ OT - OpenTherm (building management system) no control unit TopTronic® E or RS-OT necessary power supply via OT bus Temp. control external with 0-10 V 0-1.0 V no request 1.0-9.5 V .....0-100 °C Cannot be installed in boiler control panel: TopGas® classic (12-30) Can be installed in boiler control panel: TopGas® classic (35-120), TopGas® comfort	6016 725

Technical data

BMS module 0-10 V / OT - OpenTherm (building master control system)

Only in combination with TopGas® comfort, TopGas® classic, TopGas® (35-60) (OpenTherm bus)

- Dimensions: L x W x H 68x45x23 mm
- Electrical power supply: via the OT bus

Temperature control

- DIP switch 1 = OFF
- Module converts an input signal at the input into a heat generator reference value.
- The signal conversion follows a straight line. 1.0 V = 0 °C to 9.5 V = 100 °C.
- Voltages below 1.0 V: of the reference value are not passed on.

External temperature control with 0-10 V

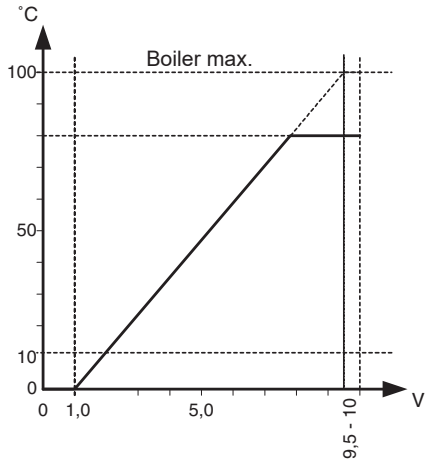

Output control

- DIP switch 1 = ON
- The module converts an input signal at the input into an output reference value.
- Limitation to the maximum flow temperature reference value

It is possible to differentiate between four different areas:

- 0 - 0.5 V No heat request
- 0.5 - 1 V Minimum output
- 1 - 9.5 V Output depending on 0 - 10 V signal
- 9.5 - 10 V Maximum output

Output control

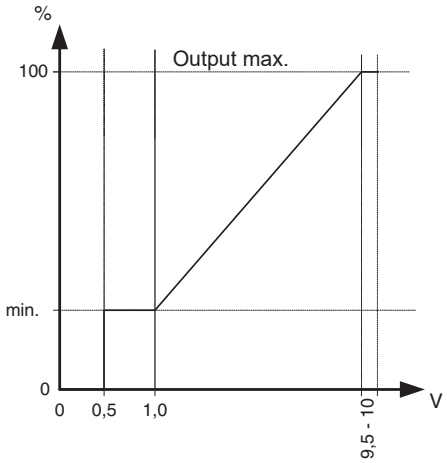

0 - 1.0 V = No requirement
1.0 - 9.5 V = 0 °C - 100 °C

Description

TopTronic® E BMS module 0-10V

- BMS module for linking to the Hoval CAN bus system for the following functions:
  - Connecting a control voltage (0-10 V) for specifying a reference temperature value to the heat generator or to the heat generator cascade or
  - Connecting a control voltage (0-10 V) for specifying a reference output value to an individual heat generator
- Temperature specification for heating, hot water and also cooling operation possible (module expansion may be required)
- Output specification for heating and cooling operation possible
- Configurable characteristics for connecting temperature or output (see diagrams below)
- Connection technology executed as plug-in screw terminals in coded Rast-5 design
- Update capability of the controller software
- Time and date via integrated RTC, multi-year spring reserve
- Fine fuse 10 A
- Controller module suitable for cabinet installation by ability to install on DIN rail 35 x 15 x 2.2 mm

Inputs and outputs

- 3 variable sensor inputs
  - for heating / cooling change-over
  - for connecting information sensors
  - for connecting a reference value increase or reduction in the system
  - 1x variable input for connection of a sensor or pulse sensor
- 0-10 V input for connecting the reference temperature/output value
- The connection to a flow rate sensor or a pulse sensor is not possible.
- Variable 230 V 3-point output, e.g. for outputting a reference value detection function for heating, hot water and cooling operation
- Variable 230 V output, e.g. for outputting an alarm message

Option

- Can be expanded by max. 2 module expansions (expansion of the inputs/outputs):
  - Module expansion universal (connection of separate reference temperature values)

Use

- For connecting the heat generator or the heat generator cascade to a higher-level building management system using 0-10 V

Delivery

- TopTronic® E BMS module 0-10 V incl. 2x mounting clips for DIN rail attachment
- DIN rail with fitting accessories
- Complete plug set for controller module

Example for temperature requirement

0-0.5 V = OFF = No requirement
0.5-10 V = 5-100 °C
The reference flow value is limited by the programmed min./max. limit.

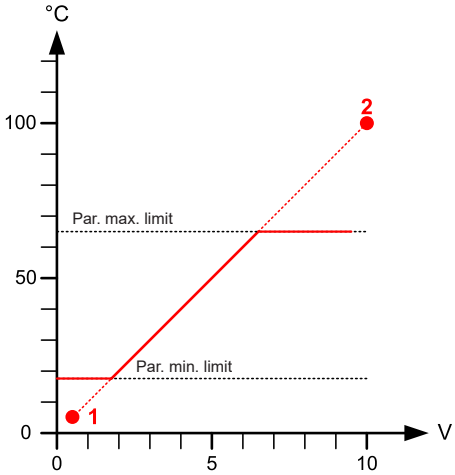

Input signal output requirement

Using the 0 -10 V characteristic curve, an output is read in by means of linear conversion. The characteristic curve is set on the points {1 V, 1 %} and {10 V, 100 %}.

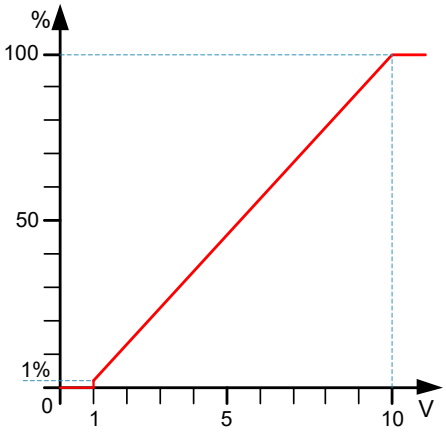

Voltages between 0 V and 0.9 V are interpreted as “OFF”. No requirement is transferred.

Voltages

0 V - 0.9 V heat generator off
1 V - 10 V heat generator required approx.
1 % to 100 % output, voltage produces reference output

Notice

A separate set value specification for heating and hot water is recommended. Therefore, a module expansion universal is required in addition to the BMS module.

Part No.

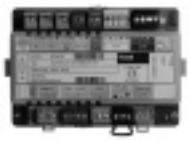

	Part No.
TopTronic® E GLT module 0-10 V Communication module for connecting the heat generator or the heat generator cascade to a higher-level building management system using 0-10 V Consisting of: - TopTronic® E building management module 0-10 V incl. 2 pcs. mounting clips for top hat rail attachment - top hat rail with fitting accessories - complete plug set for controller module	6034 578

Description

HovalConnect domestic starter Modbus
HovalConnect commercial starter Modbus

- Communication module for data exchange from Hoval TopTronic® E control systems with building management systems via Modbus TCP or Modbus RS485
- 1 Modbus module per cascade group required
- Refer to the data point table for data points and addressing
- Voltage: 12 VDC 100 mA
- Type of protection: IP20
- Connection is made, for one thing, either using RJ12 (Modbus RS485) or, for another, using a supplied connection cable via RJ45 plug connections (Modbus TCP)
- Update capability of the controller software
- Controller module suitable for cabinet installation by ability to install on DIN rail 35 x 15 x 2.2 mm or 35 x 7.5 x 2.2 mm

Notice
Electrical power supply via the Hoval CAN bus, i.e. using the module reduces the max. number of room control modules that can be connected to the bus system!

Inputs and outputs
- RJ12 plug connection for connecting to Modbus RS485
- RJ45 plug connection for connecting to Modbus TCP
- Connection to Hoval CAN bus via terminals

Use
- Controller module for connecting the heat generator or the heat generator cascade to a higher-level building management system using Modbus RS485 or Modbus TCP

Notice
The gateway Modbus can be connected to HovalConnect!

Delivery
- Gateway Modbus incl. mounting cover for DIN rail attachment
- DIN rail with fitting accessories
- Connection cable for connecting to Modbus RS485

Notice
The range of functions of the Modbus connection does not differ for the two packages. Only the HovalConnect access is different.

Part No.

	Part No.
HovalConnect starter Modbus Communication module for data exchange from Hoval TopTronic® E control systems with building management systems via Modbus TCP or Modbus RS485 Delivery - Gateway Modbus TCP/RS485 incl. mounting cover for DIN rail attachment - top hat rail with fitting accessories	
HovalConnect domestic starter Modbus	6049 501
HovalConnect commercial starter Modbus	6049 500

HovalConnect available from summer 2019
Up to that point, the gateway module Modbus TCP/RS485 is delivered - conversion to HovalConnect is carried out free of charge.

Description

HovalConnect domestic starter KNX
HovalConnect commercial starter KNX

- Communication module for data exchange from Hoval TopTronic® E control systems with building management systems via KNX TP

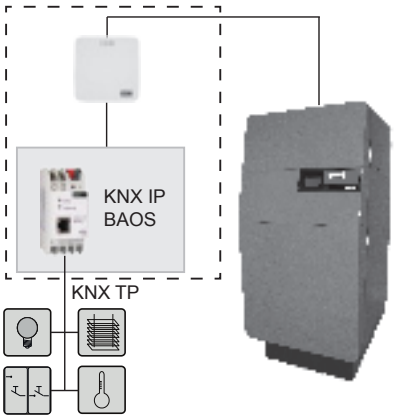

- Gateway module KNX consisting of
  - Coupling module
  - Gateway KNX
  - Mains adapter

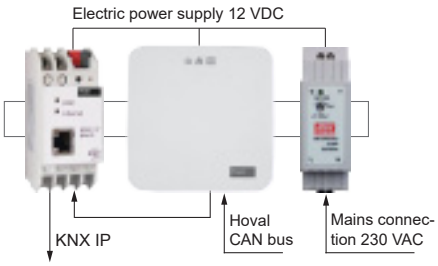

KNX bus connection

- 1 gateway KNX required per Hoval bus system
- Refer to the data point table for data points and addressing
- Voltage: 230 VAC
- Power consumption: approx. 1 W
- Type of protection: IP20
- Connection made via terminals (mains voltage, KNX TP)
- Operating elements: teach-in button for KNX
- Display elements:
  - Teach-in LED (red)
  - LED indicator (green) for KNX
  - LED indicator (green) for LAN
- Device suitable for cabinet installation by ability to install on DIN rail 35 x 15 x 2.2 mm or 35 x 7.5 x 2.2 mm

Use

- Controller module for connecting the heat generator or TopTronic® E bus system to a building management system using KNX

Notice
The gateway KNX can be connected to HovalConnect!

Delivery

- Gateway KNX incl. mounting cover for DIN rail attachment
- Coupling module to KNX twisted pair
- Mains adapter
- DIN rail with fitting accessories

Notice
The range of functions of the KNX connection does not differ for the two packages. Only the HovalConnect access is different.

Part No.

	Part No.
HovalConnect starter KNX Communication module for data exchange from Hoval TopTronic® E control systems with building management systems via Modbus KNX TP Delivery - Gateway KNX incl. mounting cover for DIN rail attachment - coupling module on KNX twisted part - power supply unit - top hat rail with fitting accessories	
HovalConnect domestic starter KNX	6049 593
HovalConnect commercial starter KNX	6049 502

HovalConnect available from summer 2019
Up to that point, the TopTronic® E gateway module KNX is delivered - conversion to HovalConnect is carried out free of charge.

Description

Hoval TopTronic® E wall casings

- Reduction in the wiring complexity on site thanks to installing the controller module directly at the sensors and actuators (e.g.: regulating armature)
- Flexible connection possibilities for cable outlets upwards or downwards
- Strain relief by cable ties and fastening points
- Material: powder-coated metal sheet
- Colour: flame red (RAL 3000)

Delivery
- Wall casing incl. built-in DIN rail
- Cable tie for strain relief
- Fastening material

On site
- Wiring between wall casing and calorifier according to diagram

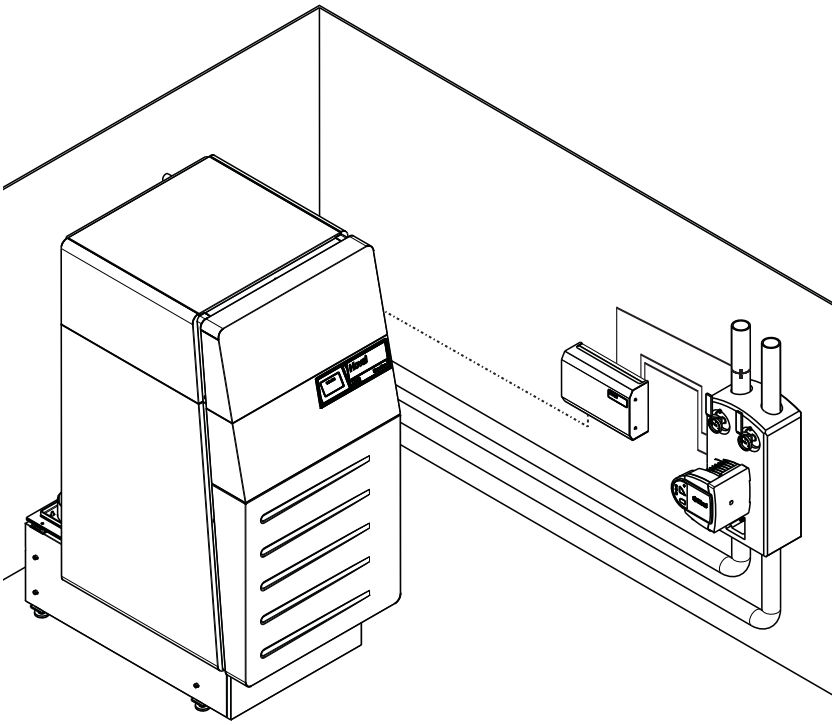

Part No.

Hoval TopTronic® E wall casings	Part No.
 **Wall casing small WG-190** - Suitable for installing a controller module/ basic module - Operation of the controller module for control purposes using the control module in the heat generator - No installation of the TopTronic® E control module possible - Dimensions: 190 x 230 x 102 (L x W x H) - Index of protection: IP20 Consisting of: - small wall casing incl. built-in top hat rail - cable ties for strain relief - fixing accessories	6035 563

 **Wall casing medium WG-360**
- Suitable for installing
  - 1 basic module w/o module expansion or
  - 1 controller module plus 1 module expansion or
  - 2 controller modules
- Operation of the controller module for control purposes using the control module in the heat generator
- No installation of the TopTronic® E control module possible
- Dimensions: 360 x 230 x 102 (L x W x H)
- Index of protection: IP20
 	
Consisting of:
- medium wall casing incl. built-in top hat rail
- cable ties for strain relief
- fixing accessories
	6035 564

Part No.

	Part No.

 **Wall casing medium with control module cut-out WG-360 BM**
- TopTronic® E control module for the controller module can be installed in the wall casing
- Suitable for installation of
  - 1 basic module w/o module expansion or
  - 1 controller module plus module expansion or
  - 2 controller modules
- Suitable for renovation works or for stand-alone systems, i.e. controller functioning independently from the heat generator (autonomous heating circuit control, solar plant, etc.)
- Dimensions: 360 x 230 x 102 (L x W x H)
- Index of protection: IP20
 	
Consisting of:
- medium wall casing with control module cut-out incl. built-in top hat rail
- cable ties for strain relief
- fixing accessories
	6035 565

 **Wall casing large WG-510**
- Suitable for installing
  - 1 basic module plus 1 module expansion or
  - 1 basic module plus 1 controller module or
  - 2 controller modules plus 1 module expansion or
  - 1 controller module plus 2 module expansions or
  - 3 controller modules
- Operation of the controller module for control purposes using the control module in the heat generator
- No installation of the TopTronic® E control module possible
- Dimensions: 510 x 230 x 102 (L x W x H)
- Index of protection: IP20
 	
Consisting of:
- large wall casing incl. built-in top hat rail
- cable ties for strain relief
- fixing accessories
	6035 566

 **Wall casing large with control module cut-out WG-510 BM**
- TopTronic® E control module for the controller module can be installed in the wall casing
- Suitable for installing
  - 1 basic module plus 1 module expansion or
  - 1 basic module plus 1 controller module or
  - 2 controller modules plus 1 module expansion or
  - 1 controller module plus 2 module expansions or
  - 3 controller modules
- Operation of the controller module for control purposes using the control module in the heat generator
- Dimensions: 510 x 230 x 102 (L x W x H)
- Index of protection: IP20
 	
Consisting of:
- large wall casing incl. built-in top hat rail
- cable ties for strain relief
- fixing accessories
	6038 533

Dimensions

TopTronic® E wall casing
(Dimensions in mm)

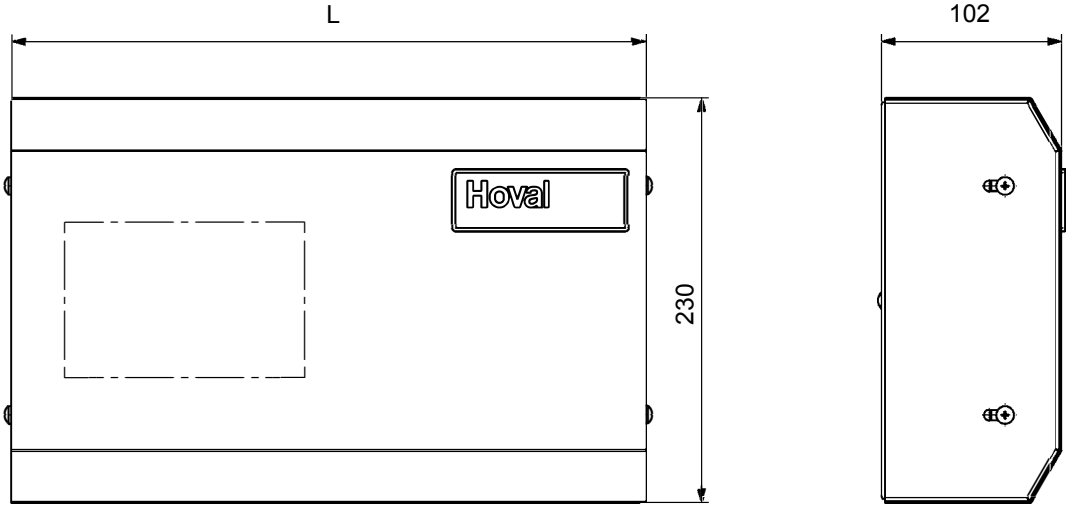

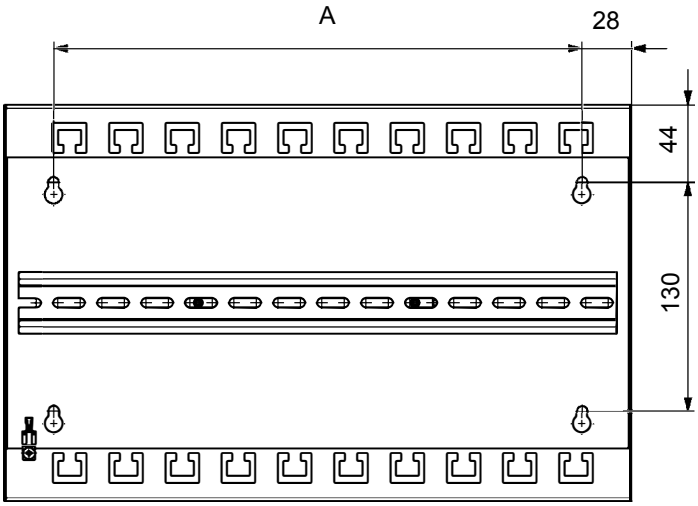

Wall casing	L	A
WG-190	190	130
WG-360	360	300
WG-360 BM	360	300
WG-510	510	300
WG-510 BM	510	300

Part No.

	Part No.
 **Single thermostat with setting in the casing** 15-95 °C externally visible setting in the casing, immersion depth 100/150 mm Differential gap 6K, splash water-protected polymer casing, nickel-plated brass immersion sleeve with thread seal G ½″, max. operating pressure 10 bar. 1 changeover contact max. 6 A (ind.) at 230 V	
Single thermostat - immersion depth 100 mm **RAKTW.1000B**	6010 081
Single thermostat - immersion depth 150 mm **RAKTW.1000S**	6010 082
 **Clamp-on flow temperature controller** **RAK-TW1000S** 15-95°C, setting (visible from the outside) inside the housing cover, with tensioning band	242 902
 **Calorifier thermostat control** **TW 12** - Universal storage tank thermostat controller for thermostatic pump charge demand - Setting in casing, visible from outside - 15 - 95 °C - Switching differential 6K - Capillar length 700 mm - Incl. fastening material for Hoval storage tanks - Can be used with integrated immersion well	6010 080
 **Flue gas thermostat AGT 519** - Switching temperature 80 °C (switching differential approx. 15K) - 1 switchover contact 10A at 230 V/ 50 Hz ohm resistive load - Simple screw fastening on flue gas pipe, with 2 m connecting cable - Tested according to DIN 3440	641 256
 **Temperature controller LAE LTR-5TSRE** - Electronic 2 point temperature controller - -50...+150 °C - switching interval 1-25 K - 1 switchover contact - cable sensor 2 m/ ø 0.7 mm	2004 485

■ **Part No.**

	Sensors for heating technology	Part No.
	**Outdoor sensor AF/2P/K** for TopTronic® E controller modules/module expansions with exception of basic module district heating/fresh water or basic module district heating com - Terminal connection - Sensor may already be included in scope of delivery of heat generator - Dimensions: 80 x 50 x 28 mm (H x W x T) - Operating temperature: -50…80 °C - Index of protection: IP x4 - Incl. fitting accessories	2055 889
	**Contact sensor ALF / 2P /2 /T /K, L = 2.0 m incl. connection box** for TopTronic® E controller modules/module expansions with exception of basic module district heating/fresh water or basic module district heating com - Cable length: 2 m with connection box - Dewpoint-proof - Operating temperature: -20…105 °C - Index of protection: IP67	2056 800
	**Contact sensor ALF/2P/4/T, L = 4.0 m** for TopTronic® E controller modules/module expansions with exception of basic module district heating/fresh water or basic module district heating com - Cable length: 4 m without plug - Dewpoint-proof - Operating temperature: -35…105 °C - Index of protection: IP67	2056 775
	**Contact sensor ALF / 2P /4 /T /S1, L = 4.0 m with plug** for TopTronic® E controller modules/module expansions with exception of basic module district heating/fresh water or basic module district heating com - Cable length: 4 m with plug - Dewpoint-proof - Operating temperature: -20…105 °C - Index of protection: IP67	2056 801
	**Immersion sensor TF/2P/2.5/6T, L = 2.5 m** for TopTronic® E controller modules/module expansions with exception of basic module district heating/fresh water or basic module district heating com - Cable length: 2.5 m without plug - (plug supplied with controller module/ module expansion) - Sensor sleeve diameter: 6 x 50 mm (Dewpoint-proof) - Sensor may already be included in scope of delivery of heat generator/controller module/ module expansion - Operating temperature: -20…105 °C - Index of protection: IP67	2056 789
	**Immersion sensor TF/2P/2.5/6T /S1, L = 2.5 m, with plug** for TopTronic® E controller modules/module expansions with exception of basic module district heating/fresh water or basic module district heating com - Cable length: 2.5 m with plug - Sensor sleeve diameter: 6 x 50 mm - Dewpoint-proof - Sensor may already be included in scope of delivery of heat generator/controller module/ module expansion - Operating temperature: -20…105 °C - Index of protection: IP67	2056 790

Part No.

	Part No.
	**Immersion sensor TF / 2P /2.5S /6T, L = 2.5 m silicone** for TopTronic® E controller modules/module expansions with exception of basic module district heating/fresh water or basic module district heating com - For use at high ambient temperatures - Cable length: 2.5 m (silicone) without plug (plug supplied with controller module/module expansion) - Sensor sleeve diameter: 6 x 50 mm - Dewpoint-proof - Operating temperature: -20…105 °C - Index of protection: IP67	2056 787
	**Immersion sensor TF / 12N /2.5 /6T, L = 2.5 m** for gas boiler with TopTronic® RS-OT - Cable length: 2.5 m - Sensor sleeve diameter: 6x50 mm - Dewpoint-proof - Operating temperature: -20…105 °C - Index of protection: IP67	2056 791
	**Immersion sensor TF/2P/5/6T, L = 5.0 m** for TopTronic® E controller modules/module expansions with exception of district heating/fresh water or basic module district heating com - Cable length: 5 m without plug - Sensor sleeve diameter: 6 x 50 mm - Dewpoint-proof - Operating temperature: -20…105 °C - Index of protection: IP67	2055 888
	**Immersion sensor TF/2P/5/6T, L = 5.0 m, with plug** for TopTronic® E controller modules/module expansions with exception of basic module district heating/fresh water or basic module district heating com - Cable length: 5 m with plug - Sensor sleeve diameter: 6 x 50 mm - Dewpoint-proof - Sensor may already be included in scope of delivery of heat generator/controller module/ module expansion - Operating temperature: -20…105 °C - Index of protection: IP67	2056 788
	**Flue gas temperature sensor TF / 1.1P /5 /4 /B, L = 5.0 m** for TopTronic® E controller modules/module expansions with exception of basic module district heating/fresh water or basic module district heating com - Cable length: 5 m without plug (plug supplied with controller module/module expansion) - Sensor sleeve diameter: 4 x 200 mm - Dewpoint-proof - Operating temperature: -50…300 °C - Index of protection: IP67 - Supplied with fastening flange and screws	2056 794
	**Collector sensor TF/1.1P/2.5S/5.5T, L = 2.5 m** for TopTronic® E solar module solar controllers ESR and UVR - Collector sensor for solar plants - Cable length: 2.5 m (silicone) without plug - Sensor sleeve diameter: 6 x 50 mm - Dewpoint-proof - Operating temperature: -50…200 °C - Index of protection: IP65	2056 776

■ **Part No.**

Sensors for district heating	Part No.
 **Outdoor sensor AF/1.1P/K FW** for TopTronic® E basic module district heating/ fresh water or basic module district heating com - Sensor for district heating application (PT1000) - Terminal connection - Sensor may already be included in scope of delivery of heat generator - Dimensions:: 80 x 50 x 28 mm (H x W x D) - Operating temperature: -50…80 °C - Index of protection: IP x4 - Incl. fitting accessories	2056 774
 **Immersion sensor TF/1.1P/2.5/6T, L = 2.5 m FW** for TopTronic® E basic module district heating/ fresh water, basic module district heating com, fixed setting controller RKP - Sensor for district heating applications (PT1000) - Cable length: 2.5 m without plug (plug supplied with controller module/module expansion) - Sensor sleeve - Diameter: 6 x 50 mm - Dewpoint-proof - Sensor may already be included in scope of delivery of heat generator/controller module/ module expansion - Operating temperature: -50…105 °C - Index of protection: IP67	2056 777
 **Contact sensor ALF/1.1P/2.5/T, L = 2.5 m FW** for TopTronic® E basic module district heating/ fresh water or basic module district heating com - Sensor for district heating applications (PT1000) - Cable length: 2.5 m without plug (plug supplied with controller module/module expansion) - Dewpoint-proof - Sensor may already be included in scope of delivery of heat generator/controller module/ module expansion - Operating temperature: -50…105 °C - Index of protection: IP67	2056 778
 **Fast temperature sensor KTY** with screw connection G ½“ Cable length: 2000 mm	2055 075
 **Clamp connectors** for the extension of sensor lines	2037 954

Part No.

	Part No.
Bivalent switch for installation in the boiler control panel - Can be used with bivalent systems for changing over priorities between heat generators or in other plant-specific switching procedures - Can be installed in the TopTronic® E heat generator control panel - 2-part switch – combination of operation interruption heat generator and bivalent switch - Max. 1 bivalent switch can be installed - Voltage: 230 V	2061 826

■ **Part No.**

Hoval system components	Part No.
System component SB-K5 - TTE - For operation of external constant temperature request/minimum value operation (ventilation/swimming pool, etc.) - Without casing Consisting of: - relay R1K - support/snap track (8 cm) incl. fixing accessories for installation in boiler controllers - Rast5 plug 2-pin green wired - Rast5 plug 2-pin yellow	6038 550
 **System component SB-K6** - For combination of external calorifier demand with thermostat - Without casing Consisting of: - relay R1K, - support/snap track (8 cm) incl. fixing accessories for installation in boiler controllers - Rast5 plug 2-pin green wired	6013 067
 **System component SB-R1K (relay)** - For universal implementation - Relay with switchover contact - 230 V/10A - Without casing Consisting of: - relay R1K - support/snap track (8 cm) incl. fixing accessories for installation in boiler controllers	6013 064
 **System component SB-R3K (relay)** - For universal implementation - Relay with 3 switchover contacts - 230 V/10A - Without casing Consisting of: - relay R3K - support/snap track (8 cm) incl. fixing accessories for installation in boiler controllers	6044 844
 **System housing 182 mm - universal** - Simple universal housing for installation of system modules or a controller module, if accommodating in the heat generator is not possible - Dimensions: 182 x 180 x 111 mm - Colour: light grey Consisting of: - Top hat rail 180 mm - 6 pcs. diaphragm lead-throughs M20	6038 551

Part No.

	Part No.
System housing 254 mm - universal - Simple universal housing for installation of system modules or a controller module (1 pce. basic module heat generator or 1 pce. controller module), if accommodating in the heat generator is not possible - Dimensions: 254 x 180 x 111 mm - Colour: light grey Consisting of: - Top hat rail 250 mm - 10 pcs. diaphragm lead-throughs M20	6038 552

Description

Balancing valve TN

- As a line balancing and shut-off valve with direct indication of the set flow rate on the sight glass
- Automatically blocking bypass routed parallel to the main flow, with measuring and indication section
- Measuring section with float and counter-spring
- Materials
  - Housing components: brass
  - Interior components: stainless steel, brass and polymer
  - Sight glass: borosilicate
  - Seals: EPDM
  - Female thread (Rp) acc. to DIN 2999/ISO 7

Size	Measuring range l/min
DN 20	2-12
DN 20	8-30
DN 25	10-40
DN 32	20-70

Electrical flow rate meter VIG

- Single-jet water meter
- Impeller wheel meter for exact registration of the flow rate with volt-free pulse output
- Temperature range up to max. 90 °C

Type	Continuous flow m^3/h
VIG 2.5	2.5
VIG 4	4.0
VIG 10	10.0

Flow rate sensor set

- Flow rate sensor according to the principle of the Kármán vortex street
- Used for limiting the heat quantity in conjunction with the heat balancing module expansion or various controller modules
- Flow rate sensor supplies the current flow rate as well as the current temperature at the measuring point
- No moving parts, therefore insensitive to dirt build-up
- Low pressure drop
- High accuracy
- Can be used up to 125 °C

Plastic housing

Size	Flow rate l/min
DN 8	0.9-15
DN 10	1.8-32
DN 15	3.5-50
DN 20	5-85
DN 25	9-150

Brass housing

Size	Flow rate l/min
DN 10	2-40
DN 32	14-240

Part No.

Balancing valve TN
As a regulating and shut-off valve with direct display of the volume flow on the bypass.
Maximum operating temperature 185 °C

Size	Measuring range l/min	Connection Rp x Rp	kvs[1]	Part No.
DN 20	2-12	¾″ x ¾″	2.2	2038 034
DN 20	8-30	¾″ x ¾″	5.0	2038 035
DN 25	10-40	1″ x 1″	8.1	2038 036
DN 32	20-70	1¼″ x 1¼″	17.0	2038 037

[1] Flow rate in m^3/h at 100% opening and a pressure drop of 1 bar

Electrical flow rate pulse generator VIG
Impeller wheel meter for exact registration of the flow rate with pulse output.

Type	Litres/pulse	Connection	Part No.
VIG 2.5	0.5	R ½″	6045 699
VIG 4	0.5	R ¾″	6045 700
VIG 10	1.0	R 1¼″	6045 701

Sets flow rate sensor
- Used in combination with the module expansion heat accounting or var. controller modules for heat metering
- Flow sensor supplies the current flow rate as well as the current temperature to the measuring point

Consisting of:
- flow rate sensor
- connection cable
- Rast5 plug for connecting to TopTronic® E

Plastic housing

Unit of measure	Connection	Flow rate l/min	Part No.
DN 8	G ¾″	0.9-15	6038 526
DN 10	G ¾″	1.8-32	6038 507
DN 15	G 1″	3.5-50	6038 508
DN 20	G 1¼″	5-85	6038 509
DN 25	G 1½″	9-150	6038 510

Brass housing

Unit of measure	Connection	Flow rate l/min	Part No.
DN 10	G 1″	2-40	6042 949
DN 32	G 1½″	14-240	6042 950

Technical data

Balancing valve TN
(Dimensions in mm)

- Type DN 20 - ¾", DN 20 - ¾", DN 25 - 1", DN 32 - 1¼"
- Connections
  - DN 20 - Rp ¾" x Rp ¾"
  - DN 20 - Rp ¾" x Rp ¾"
  - DN 25 - Rp 1" x Rp 1"
  - DN 32 - Rp 1¼" x Rp 1¼"

  Measuring accuracy ±10% of the display value
- Kvs values
  - 2.2 m³/h
  - 5.0 m³/h
  - 8.1 m³/h
  - 17.0 m³/h

  at viscosity 1 mm²/s
- Measuring ranges
  - 2-12 l/min
  - 8-30 l/min
  - 10-40 l/min
  - 20-70 l/min
- In conjunction with sealing plugs
  Max. operating temperature 185 °C

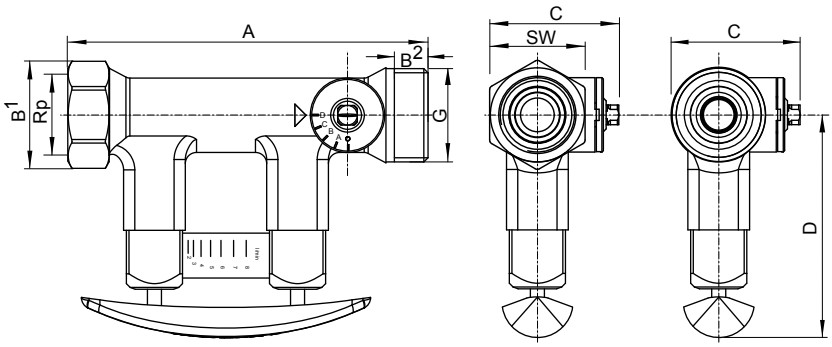

DN	A	B1	C	D	SW	Rp
20	129	39	46	79	34	¾"
25	152	47	58	82	41	1"
32	161	56	65	84	49	1"

Pressure drop curves

DN 20 - Rp ¾" x Rp ¾" - 2-12 l/min

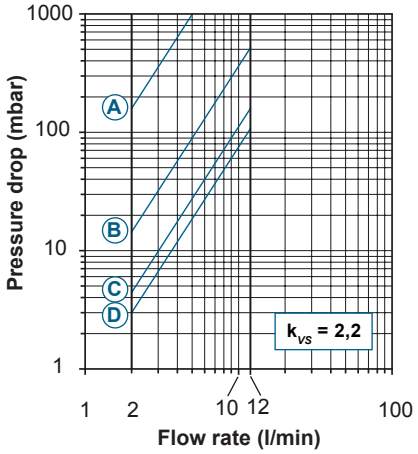

A–D Valve position

DN 20 - Rp ¾" x Rp ¾" - 8-30 l/min

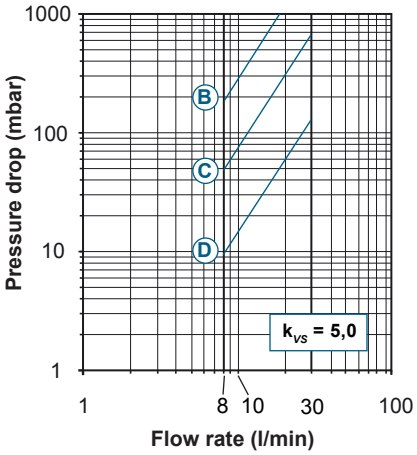

B–D Valve position

DN 25 - Rp 1" x Rp 1" - 10-40 l/min

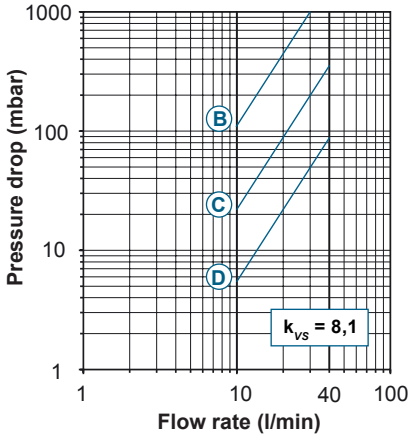

B–D Valve position

DN 32 - Rp 1¼" x Rp 1¼" - 20-70 l/min

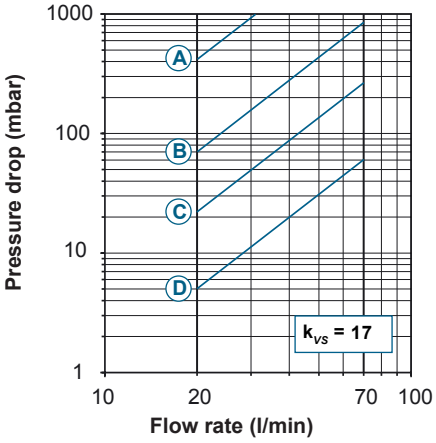

A–D Valve position

Technical data

Hoval flow rate meters VIG 2,5 und 4
(Dimensions in mm)

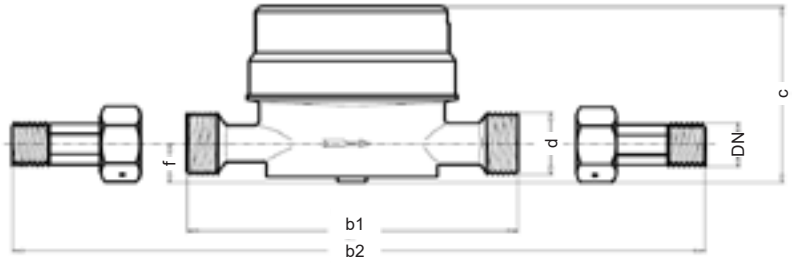

VIG 2.5 and 4:
Horizontal and vertical installation possible

Before and after the sensor:
min. 20 cm straight pipe run as settling line

Hoval flow rate meters VIG 10
(Dimensions in mm)

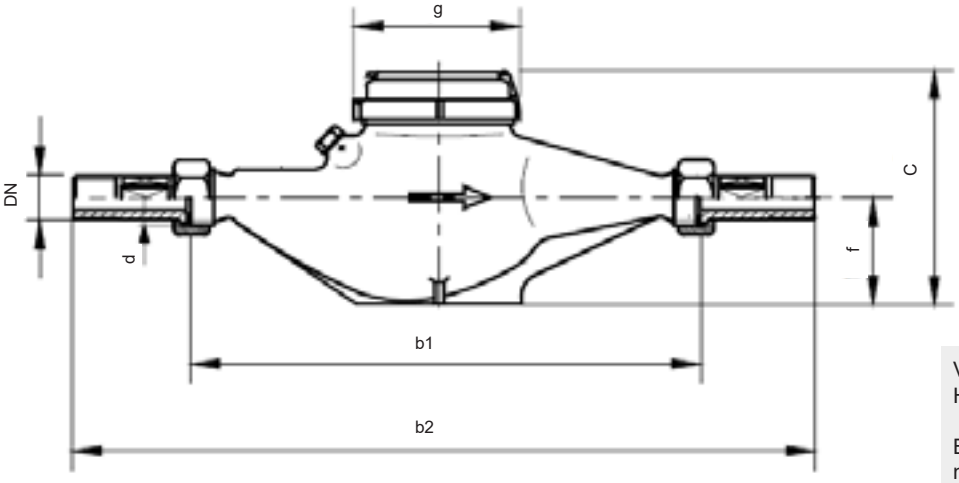

VIG 10:
Horizontal installation

Before and after the sensor:
min. 20 cm straight pipe run as settling line

Type	DN		Continuous flow Q3	Max. flow Qmax	Qt	Qmin	d Thread	b1 Meter length	b2	c	g	f	Weight
	mm	Inch	m³/h	m³/h	l/h	l/h	mm	mm	mm	mm	mm	mm	kg
VIG 2.5	15	R ½″	2.5	3.0	-	-	G ¾″	110	188	78	-	17	0.505
VIG 4	20	R ¾″	4.0	5.0	-	-	G 1″	130	228	78	-	21	0.530
VIG 10	32	R 1¼″	10.0	12.0	480	120	G 1½″	260	378	130	100	40	3.6

Pressure drop curve

VIG 2,5, 4

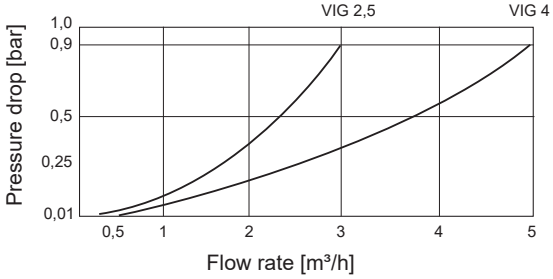

VIG 10

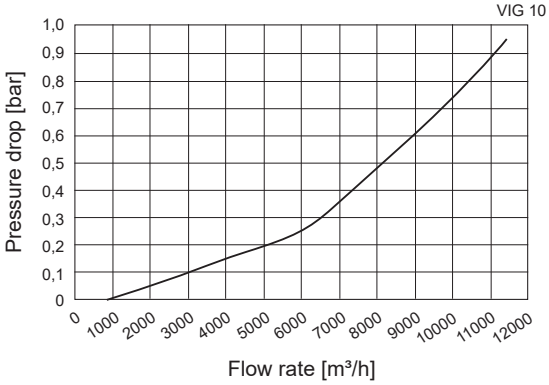

Technical data

Hoval flow rate sensor sets
(Dimensions in mm)

Plastic housing

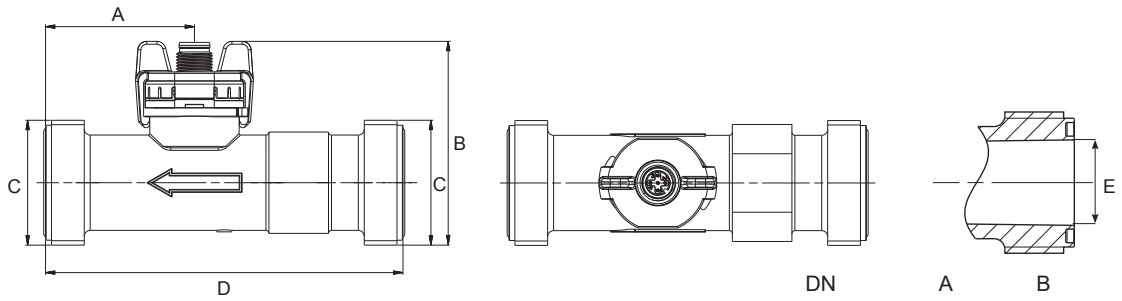

DN	A	B	C	D	E
8	48.2	55.7	G ¾″	86	11.5
10	39.5	54.1	G ¾″	90	11.5
15	41.6	59.5	G 1″	97	16.0
20	42.6	65.8	G 1¼″	117	20.0
25	56.0	71.3	G 1½″	132	26.0

Brass housing

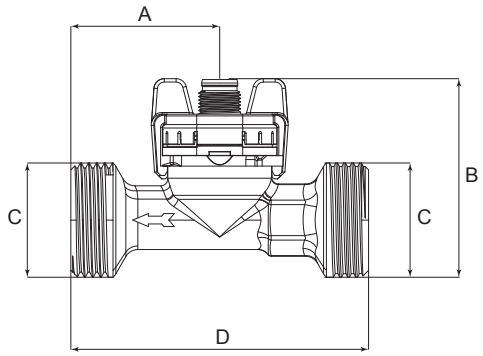

DN	A	B	C	D
10	43	57.3	G 1″	86
32	50	74.9	G 1½″	134

Dimensions of installation section

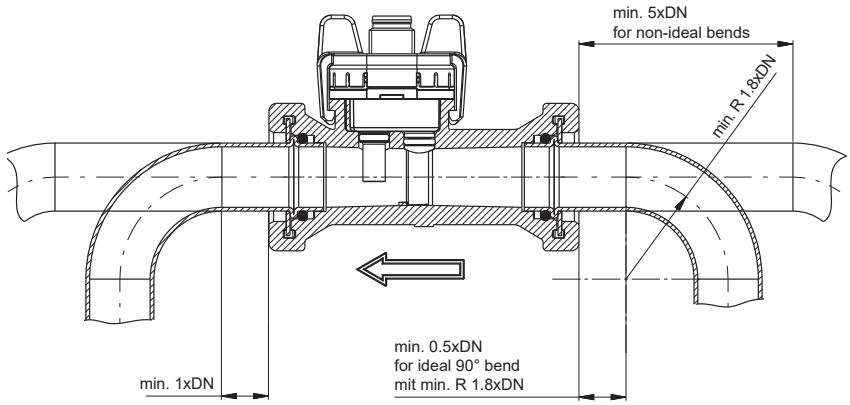

Application conditions

- Temperature
  - Media < +125 °C
  - Surroundings -15 ... +85 °C
  - Storage -30 ... +85 °C
- Maximum pressure at media temperature
  - over the life-time 12 bar at +40 °C
  - over the life-time 6 bar at +100 °C
  - for 600 hours 4 bar at +125 °C
  - for 2 hours 4 bar at +140 °C
  - maximum test pressure 18 bar at +40 °C
- Cavitation
  The following equation applies in order to avoid cavitation: $P_{abs\ outlet} / P_{difference > 5.5}$

Pressure drop
Plastic housing

	Flow rate l/min			Flow rate l/h			Pressure drop mbar		
	min.	mid.	max.	min.	mid.	max.	min.	mid.	max.
DN 8	0,9	7	15	54	420	900	1	42	190
DN 10	1,8	15	32	108	900	1920	1	50	230
DN 15	3,5	25	50	210	1500	3000	1	42	170
DN 20	5,0	38	85	300	2280	5100	1	37	180
DN 25	9,0	70	150	540	4200	9000	1	45	210

Brass housing

	Flow rate l/min			Flow rate l/h			Pressure drop mbar		
	min.	mid.	max.	min.	mid.	max.	min.	mid.	max.
DN 10	2	20	40	120	1200	2400	1	90	360
DN 32	14	120	240	840	7200	14400	1	36	140

Description

SHARKY 775
Ultrasound compact heat meter

Compact heat meter consisting of ultrasound heat meter and calculation unit.

Ultrasound heat meter
- The heat meter measures the volume flow statically using the ultrasound measurement principle.
- The meter is characterised by long-term stability for energy measurements with maximum measurement accuracy.
- Insensitive to dirt build-up
- Any installation position (exceptions see “Technical data”)
- Sizes DN 15 to DN 100
- Nominal flow rates 1.5-60 qp
- Media temperature 5-130 °C
- Temperature sensor PT500, firmly connected with the calculation unit

Calculation unit
- Electronic calculation unit with 8-digit LCD display
- 3.6 VDC battery power supply or 230 VAC (50-60 Hz) mains supply
- The calculation unit is removable and can be mounted on the wall as on-wall version
- Temperature sensor PT500, firmly connected with the calculation unit
- Temperature measuring range 1...180 °C
- The consumption values measured by the meter can be read out on the meter on site.
- Mains supply version with integrated M-bus module for connecting to the TopTronic® E basic module district heating or to the TopTronic® E measuring module

Application
- For collection of all payroll-relevant data for measurement of the energy consumption in heating and/or refrigeration plants

On site
- Installation of the calculation unit directly onto the volume measuring unit or the wall

Approval
MID (DE-10-MI004-PTB013) and PTB K 7.2

Threaded version

Connection size	Nominal flow rate qp m^3/h
R ¾	1.5
R 1	2.5
R 1¼	6.0
R 2	10

Flange version

Connection size	Nominal flow rate qp m^3/h
DN 50	15
DN 65	25
DN 80	40
DN 100	60

Part No.

Heat meter SHARKY 775 — Part No.

Ultrasound compact heat meter SHARKY 775
- Volume flow measurement using the ultrasound measurement principle
- Calculation unit for compact and wall installation
- Two temperature sensors, firmly connected with the calculation unit
- The consumption values measured by the meter can be read out on the meter on site.
- Mains supply version with integrated M-bus module for connecting to the TopTronic® E basic module district heating or to the TopTronic® E measuring module

Heat meter with external thread
without screw connections (max. 150 °C, PN 25)

Connection size	Nominal flow rate qp	Install. length	kvs value	Sensor	Sensor cable length	
	m^3/h	mm			m	
Battery power supply without MBus						
R ¾	1.5	110	5.48	M10×1 [1]	2	2047 509
R 1	2.5	130	7.91	M10×1 [1]	2	2047 511
R 1¼	6.0	260	16.8	2x ½″×85 [2]	3	2059 660
R 2	10	300	32.4	2x ½″×85 [2]	3	2059 661
Mains supply incl. MBus						
R ¾	1.5	110	5.48	M10×1 [1]	2	2047 512
R 1	2.5	130	7.91	M10×1 [1]	2	2047 513
R 1¼	6.0	260	16.8	2x ½″×85 [2]	3	2047 516
R 2	10	300	32.4	2x ½″×85 [2]	3	2047 517

Heat meter with flange connection
without counter flanges (max. 150 °C, PN 25)

Connection size	Nominal flow rate qp	Install. length	kvs value	Sensor	Sensor cable length	
	m^3/h	mm			m	
Battery power supply without MBus						
DN 50	15	270	53.00	2x ½″×120 [2]	3	2059 662
Mains supply incl. MBus						
DN 50	15	270	53.00	2x ½″×120 [2]	3	2047 518
DN 65	25	300	91.29	2x ½″×120 [2]	3	2047 519
DN 80	40	300	141.42	2x ½″×120 [2]	3	2047 520
DN 100	60	360	219.09	2x ½″×120 [2]	3	2047 522

[1] Direct installation sensor
[2] Immersion sensor without immersion sleeve

Immersion sleeves must be ordered separately in the appropriate length.

Part No.

Accessories		Part No.

Immersion sleeve
with external thread

Connection size	Install. length mm	
G ½″	40	2047 503
G ½″	85	2047 505
G ½″	120	2047 506

Heat meter installation set
Consisting of:
2 ball valves with union nut
1 ball valve with sensor seat
1 pipe nipple, galvanised

Ball valve Rp	Union nut Rp	Pipe nipple G	Install. length mm	
¾″	¾″	¾″	110	2073 104
¾″	1″	1″	130	2073 105
1″	1¼″	1¼″	150	2073 106

Not suitable for installation in heating armature groups.

Heat meter accessories Diehl M. PT500 2059 953
Sensor pair PT500
Sensor M10x1
Cable lengths: 2.0 m
Only needed as spare part

Mains adapter for calculation unit 2069 807
230 V AC voltage module
Terminals suited for a cable
with up to 2.5 mm²
galvanic isolation
Frequency 50 Hz
soldered-in safety fuse (50 mA)
The supply line must be secured with
max. 6 A and be protected against
manipulation
Is needed as spare part or for
converting battery meters to
mains-supplied meters

MBus communication module 2053 201
MBus module standardised acc. to
EN 1434-3 with 2-pin terminal with
"24" and "25" connections
reverse-polarity protected
MBus supply via the meter
Is needed as spare part
or MBus upgrade of battery meters.
Can also be used as 2nd module for
additional MBus read-out
(e.g. on site GLT)

Technical data

Flow rate sensor

Connection size	R	Inches	¾	1	1¼	2
Nominal flow rate	qp	m^3/h	1.5	2.5	6	10
Nominal diameter	DN	mm	15	20	25	40
Installation length	L	mm	110	130	260	300
Starting value		l/h	2.5	4	10	20
Min. flow rate (DR 1:250)	qi	l/h	6	10	24	40 [1)]
Min. flow rate (DR 1:100)	qi	l/h	15	25	60	100
Max. flow rate	qs	m^3/h	3	5	12	20
Overload value		m^3/h	4.6	6.7	18.4	24
Operating pressure	PN	bar	16/25	16/25	16/25	16/25
Pressure drop with qp	Δp	mbar	120	100	128	140
Heat meter temp. range		°C	5 ... 130	5 ... 130	5 ... 150	5 ... 150
Kvs value ($\Delta p=Q^2/Kvs^2$)			4.33	7.91	16.77	26.73

Connection size	DN		50	65	80	100
Nominal flow rate	qp	m^3/h	15	25	40	60
Nominal diameter	DN	mm	50	65	80	100
Installation length	L	mm	270	300	300	360
Starting value		l/h	40	50	80	120
Min. flow rate (DR 1:250)	qi	l/h	60 [1)]	100 [1)]	160	240 [1)]
Min. flow rate (DR 1:100)	qi	l/h	150	250	400	600
Max. flow rate	qs	m^3/h	30	50	80	120
Overload value		m^3/h	36	60	90	132
Operating pressure	PN	bar	16/25	16/25	16/25	16/25
Pressure drop with qp	Δp	mbar	140	75	80	75
Heat meter temp. range		°C	5 ... 150	5 ... 150	5 ... 150	5 ... 150
Kvs value ($\Delta p=Q^2/Kvs^2$)			40.09	91.29	141.42	219.09

[1)] Horizontal installation only

Technical data

Pressure drop SHARKY 775

The pressure loss in a flow rate sensor is indicated as the maximum pressure loss with qp. According to EN 1434, the maximum pressure loss must not exceed 0.25 bar.

Curve	Nominal flow rate qp m³/h	Max. flow rate qs m³/h	Min. flow rate (DR 1:250) qi l/h	Min. flow rate (DR 1:100) qi l/h	Nominal diameter mm	Kvs value
3.	1.5	3.0	6	15	DN 15/20	4.33
4.	1.5	3.0	6	15	DN 15/20	5.48
5.	2.5	3.0	10	25	DN20	7.91
6.	6	12	24	60	DN 25	16.77
7.	10	20	40 [1)]	100	DN 40	26.73
8.	15	30	60 [1)]	150	DN 50	40.09
9.	25	50	100 [1)]	250	DN 65	91.29
10.	40	80	160	400	DN 80	141.42
11.	60	120	240 [1)]	600	DN 100	219.09

[1)] Horizontal installation only

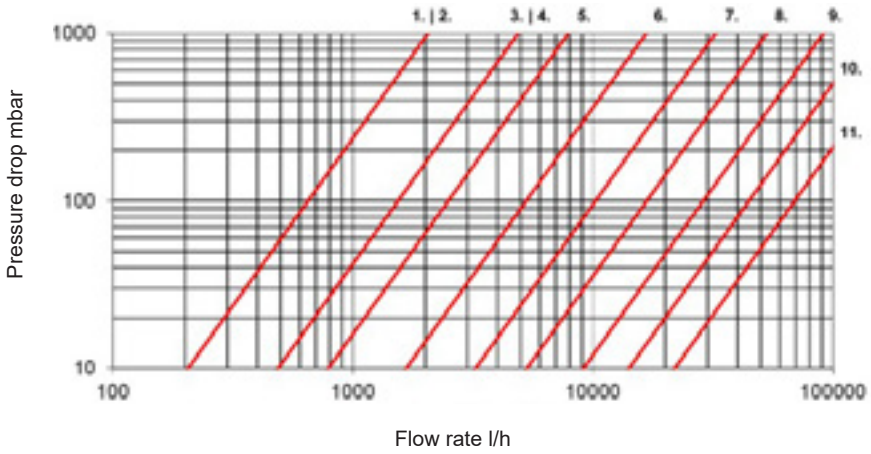

Dimensions

SHARKY 775
(Dimensions in mm)

Threaded version

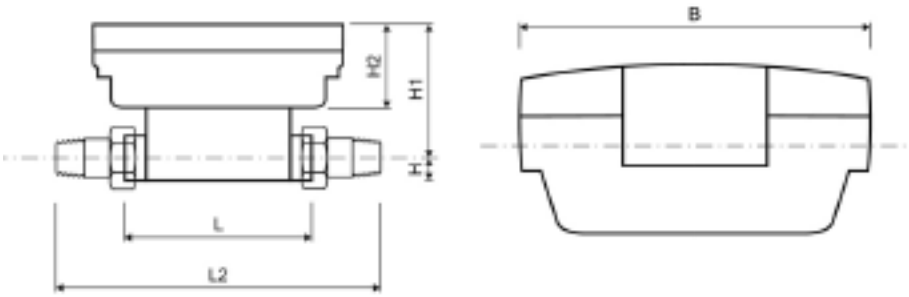

Nominal flow rate	Nominal diameter	Installation length	Installation length with screw connection	Length calculation unit	Height	Height	Height calculation unit	Width calculation unit	Connection thread meter	Connection thread screw connection
qp	DN	L	L2	L1	H	H1	H2	B	F	D
m^3/h	mm	mm	mm	mm	mm	mm	mm	mm	mm	mm
1.5	15	110	190	150	14.5	82	54	100	G ¾B	R ½
2.5	20	130	230	150	18	84	54	100	G 1 B	R ¾
6	25	260	380	150	23	88.5	54	100	G 1¼B	R1
10	40	300	440	150	33	94	54	100	G 2 B	R 1½

Flange version

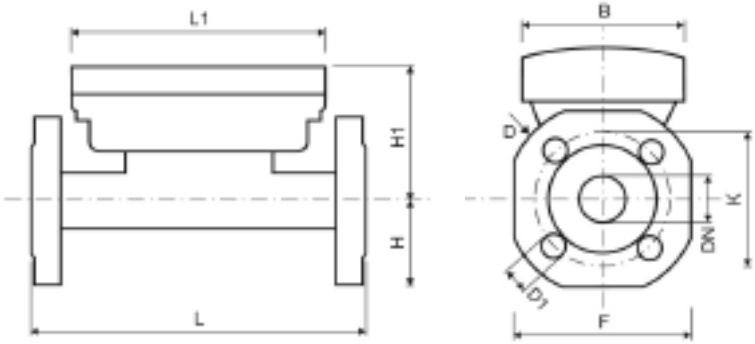

Nominal flow rate	Nominal diameter	Installa-tion length	Length calculation unit	Height	Height	Height calculation unit	Width calculation unit	Flange dimensions	Flange diameter	Pitch circle diameter	Diame-ter	Number of flange drill holes
qp	DN	L	L1	H	H1	H2	B	F	D	K	D1	units
m^3/h	mm	mm	mm	mm	mm	mm	mm	mm	mm	mm	mm	
15	50	270	150	73.5	99	54	100	147	163	125	18	4
25	65	300	150	85	106.5	54	100	170	184	145	18	8
40	80	300	150	92.5	114	54	100	185	200	160	19	8
60	100	360	150	108	119	54	100	216	235	180 [1]/190	19 [1]/22	8

[1] Values for PN 16 casing

Engineering

MBus meter matching TopTronic® E control and its functions

	Gas meter		Electricity meter (only positive values are released)					Heat meter																									
Designation	Diehl AERIUS G4 M17 v0x30	Diehl AERIUS G4 M18 v0x30	NZR WSD 32 M	EMH DIZ-W1EL-00-KM0-0M-200010-E50/K	algodue UEM80-D M, v0x04	algodue UEM1P5-D M, v0x04	algodue UEM40-2C, v 0x04 (must be set to "algodue 1-phase" under configuration)	Hydrometer Sharky 775 M11 v0x2F	Kamstrup Multical® Compact v0x01	Kamstrup Multical® 602 v0x0F	Siemens UH50-A22C-AT06-F 0x04	Hydrometer SHARKY 775 M14 v0x20	Kamstrup 403 W 402 DB v0x34	Siemens WFZ 31 v0x3	Kamstrup Multical® 401 v0x02	Kamstrup Multical® 403 v0x34	Kamstrup Multical® 601 v0x01	Kamstrup Multical® 603 v0x35	Danfoss EEM-C manufacturer ID: KAM v0x01	Hydrometer Sharky 773 v0x2E	Kamstrup Multical® 66C v0x01	Kamstrup Multical® 402 v0x0B	Kamstrup ultrakon EWZ 810 manufacturer ID:KAM v0x01	Kamstrup Multical® 602 incl. pulse module v0x0F	Siemens UH50-A22C-AT06-F 0x04	Sontex Neovac Supercal531 v0x19 (Must be set to "Sontex" under configuration)	Sontex Superstatic 749 v0x0E (Must be set to "Sontex" under configuration)	Engelmann SensoStar2 v0x00	AQUA Metro Calec energy Master v0xD2	Amtron Sonic D15	ista Sensonic II M-bus	Itron UltraMaXX MK HA, M-bus	ista Ultego III perfect, M-bus
Current energy								●	●	●	●	●			●		●	●	●	●	●	●	●	●	●	●	●	●	●	●	●	●	●
Current power								●	●	●	●				●	●	●	●	●	●		●	●	●	●	●		●	●	●	●	●	●
Current flow rate	●	●						●	●	●	●				●	●	●	●	●	●		●	●	●	●	●		●	●	●	●	●	●
Current volume	●	●						●	●	●	●	●	●	●	●	●	●	●	●	●	●	●	●	●	●	●	●	●	●	●	●	●	●
Current flow temperature	●	●						●	●	●	●	●	●		●	●	●	●	●	●	●	●	●	●	●	●	●	●	●	●	●	●	●
Current return temperature								●	●	●	●	●	●		●	●	●	●	●	●	●	●	●	●	●	●	●	●	●	●	●	●	●
Current differential temperature								●	●	●	●	●	●		●	●	●	●	●	●	●	●	●	●	●	●	●	●	●	●	●	●	●
Serial number	●	●	●	●	●	●	●	●	●	●	●	●	●	●	●	●	●	●	●	●	●	●	●	●	●	●	●	●	●	●	●	●	●
Fault message/M-bus status byte	●	●	●	●	●	●	●	●	●	●	●	●	●	●	●	●	●	●	●	●		●		●	●			●	●	●	●	●	●
Manufacturer	●	●	●	●	●	●	●	●	●	●	●	●	●		●	●	●	●	●	●	●	●	●	●	●	●	●	●		●	●	●	●
Sort	●	●	●	●	●	●	●	●	●	●	●	●	●	●	●	●	●	●	●	●	●	●	●	●	●	●	●	●	●	●	●	●	●
Current tariff register 1								●																●						●			
Current tariff register 2								●																						●			
Current date								●		●	●	●		●	●	●				●		●		●	●	●	●	●	●	●			
Current time								●		●	●	●		●	●	●				●		●		●	●	●	●	●	●	●			
Energy key date 1								●	●	●	●	●					●							●						●			
Volume 1								●	●	●	●	●		●			●			●			●							●			
Tariff register 1 / S1								●																						●			
Tariff register 2 / S1								●																						●			
Date 1								●	●	●	●	●	●	●		●	●	●	●	●					●					●			
Date future key date 1												●		●						●													
Energy key date 2								●			●	●																		●			
Volume 2								●			●	●		●																●			
Tariff register 1 / S2								●																						●			
Tariff register 2 / S2								●																						●			
Date 2								●				●		●						●										●			
Date future key date 2												●								●													
version	●	●			●	●	●	●	●	●	●	●	●	●	●	●	●	●	●	●	●	●	●	●	●	●	●	●	●	●			
Operating days								●	●	●	●	●	●			●	●	●	●	●	●	●	●	●	●					●			
Current energy cold										●														●									
Current output cold										●														●									
Current volume ltr	●	●						●	●	●	●	●	●		●	●	●	●	●														
Current active power L1 W					●	●																											
Current active power L2 W					●	●																											
Current active power L3 W					●	●																											
Current active power total W					●	●	●																										
Current reactive power L1 W					●	●																											
Current reactive power L2 W					●	●																											
Current reactive power L3 W					●	●																											
Current reactive power total W					●	●	●																										
Active energy import 1 kWh			●	●	●	●	●																										
Current voltage L1			●	●	●	●	●																										
Current voltage L2					●	●																											
Current voltage L3					●	●																											
Current current L1			●	●	●	●																											
Current current L2					●	●																											
Current current L3					●	●																											
Current current total					●	●	●																										
Current cos phi L1					●	●																											
Current cos phi L2					●	●																											
Current cos phi L3					●	●																											
Current cos phi total			●		●	●	●																										
Current mains frequency 1			●		●	●	●																										

Engineering

Overview energy/heat quantity balancing

System	Consumer	Energy balancing (through-flow measuring method) Easy: up to ~50 kW per circuit	Easy: more than ~50 kW per circuit	Premium (calibrated)
EBZ_010	1 heating circuit + hot water	Flow rate sensor (according to the principle of the Kármán vortex street)		
EBZ_020		Water meter (with pulse output)		
EBZ_030				M-bus meter
EBZ_040	2 heating circuits + hot water	Water meter (with pulse output)		
EBZ_050				M-bus meter
EBZ_060	3 heating circuits + hot water	Water meter (with pulse output)		
EBZ_070				M-bus meter
additional heating/consumer circuits on request				

Description of the system

EBZ_010	1 heating circuit + hot water	up to ~50 kW per circuit

Energy balancing for heating circuit by flow rate sensor
Energy balancing for domestic hot water using constant through-flow

Components required:
- 1x TopTronic® E basic module heat generator for controlling heating circuit 1 + hot water (usually installed in the heat generator)
- 1x TopTronic® E module expansion heating circuit incl. energy balancing TTE-FE HK-EBZ (heating circuit 1)
- 1x flow rate sensor set (for measuring flow rate heating circuit 1)
- 1x balancing valve TN / flowmeter for setting the constant through-flow (for measuring hot water)

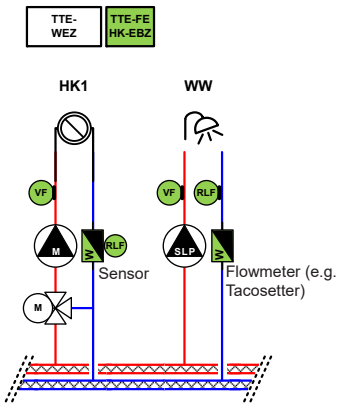

EBZ_020	1 heating circuit + hot water	up to and more than 50 kW per circuit

Energy balancing for heating circuit by water meter with pulse output
Energy balancing for hot water by water meter with pulse output

Components required:
- 1x TopTronic® E basic module heat generator for controlling heating circuit 1 + hot water (usually installed in the heat generator)
- 1x TopTronic® E module expansion heating circuit incl. energy balancing TTE-FE HK-EBZ (heating circuit 1)
- 2x on-site water meters (e.g. flow rate sensor VIG) with pulse output (for heating circuit 1 + hot water, max. pulse value 10 ltr./pulse)

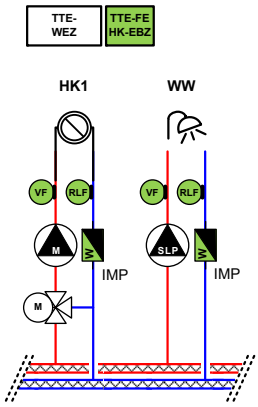

EBZ_030	1 heating circuit + hot water	calibrated measurement per circuit

Calibrated energy balancing for heating circuit by M-bus meter
Calibrated energy balancing for hot water by M-bus meter

Components required:
- 1x TopTronic® E basic module heat generator for controlling heating circuit 1 + hot water (usually installed in the heat generator)
- 1x TopTronic® E measuring module TTE-MWA
- 2x M-bus meter (for heating circuit 1 + hot water)

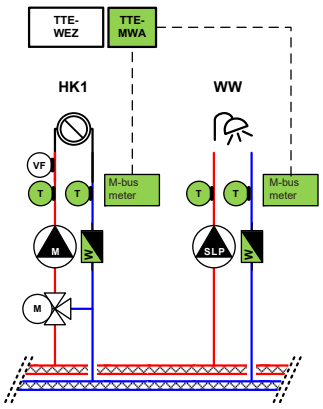

Engineering

EBZ_040	2 heating circuits + hot water	up to/more than ~50 kW per circuit

Energy balancing for heating circuits by water meter with pulse output
Energy balancing for hot water by water meter with pulse output

Components required:
- 1x TopTronic® E basic module heat generator for controlling heating circuit 1 + hot water (usually installed in the heat generator)
- 1x TopTronic® E module expansion heating circuit incl. energy balancing TTE-FE HK-EBZ (heating circuit 2)
- 1x contact sensor (hot water return)
- 3x on-site water meters (e.g. flow rate sensor VIG) with pulse output (for heating circuit 1 + heating circuit 2 + hot water, max. pulse value 10 ltr./pulse)

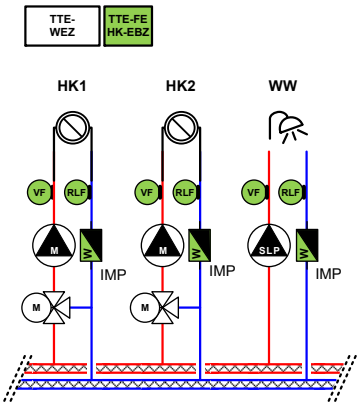

EBZ_050	2 heating circuits + hot water	calibrated measurement per circuit

Calibrated energy balancing for heating circuits by M-bus meter
Calibrated energy balancing for hot water by M-bus meter

Components required:
- 1x TopTronic® E basic module heat generator for controlling heating circuit 1 + hot water (usually installed in the heat generator)
- 1x TopTronic® E module expansion heating circuit for controlling heating circuit 2
- 1x TopTronic® E measuring module TTE-MWA
- 3x M-bus meter (for heating circuit 1 + heating circuit 2 + hot water)

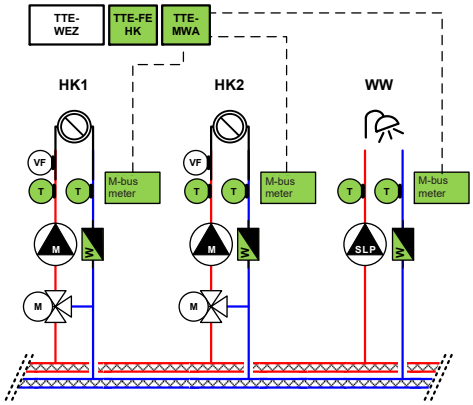

EBZ_060	3 heating circuits + hot water	up to/more than ~50 kW per circuit

Energy balancing for heating circuits by water meter with pulse output
Energy balancing for hot water by water meter with pulse output

Components required:
- 1x TopTronic® E basic module heat generator for controlling heating circuit 1 + hot water (usually installed in the heat generator)
- 1x TopTronic® E module expansion heating circuit incl. energy balancing TTE-FE HK-EBZ (heating circuit 2)
- 1x TopTronic® E heating circuit/hot water module for controlling heating circuit 3
- 2x contact sensors (hot water return + heating circuit 3)
- 4x on-site water meters (e.g. flow rate sensor VIG) with pulse output (for heating circuit 1 + heating circuit 2 + heating circuit 3 + hot water, max. pulse value 10 ltr./pulse)

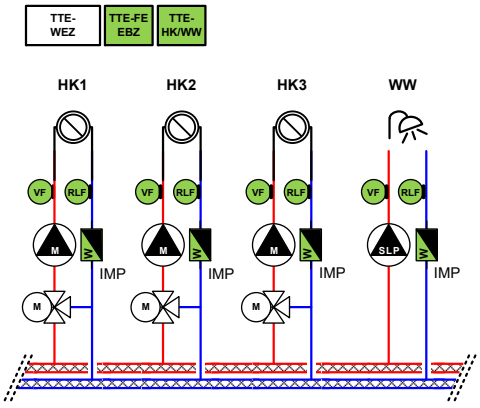

EBZ_070	3 heating circuits + hot water	calibrated measurement per circuit

Calibrated energy balancing for heating circuits by M-bus meter
Calibrated energy balancing for hot water by M-bus meter

Components required:
- 1x TopTronic® E basic module heat generator for controlling heating circuit 1 + hot water (usually installed in the heat generator)
- 1x TopTronic® E module expansion heating circuit for controlling heating circuit 2
- 1x TopTronic® E heating circuit/hot water module for controlling heating circuit 3
- 1x TopTronic® E measuring module
- 4x M-bus meter (for heating circuit 1 + heating circuit 2 + heating circuit 3 + hot water)

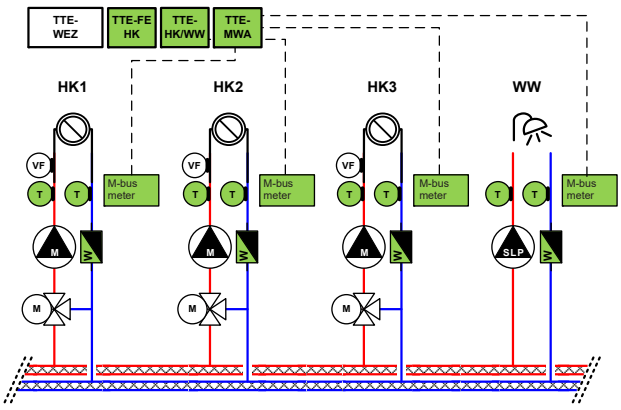

Engineering

Assignment heat meter - TopTronic® E modules

			TopTronic® E				
			Basic module heat generator TTE-WEZ	**Basic module district heating/fresh water district heating com** TTE-FW / TTE-FW com	**Controller module (solar, buffer, etc.)** TTE-SOL / TTE-PS	**Module expansion incl. energy balancing** TTE-FE	**Measuring module** TTE-MWA
			Available inputs				
			1x IMP 	1x FVT / 16x M-bus 	1x FVT / 1x IMP 		16x M-bus 
Heat meter	FlowRotor 	required inputs FVT			•	•	
Heat meter	Flow rate sensor set 	required inputs FVT		o	•	•	
Heat meter	Flow rate meter VIG 	required inputs FVT or IMP	•		•	•	
Heat meter	Heat meter 	required inputs M-bus		•			•

o Only with TransTherm aqua F

Description

Controller RKP 111A

- Continuous electronic fixed setting controller with PI action.
- Setting range: 0 °C to 60 °C/ 60 °C to 120 °C. Plastic casing with removable cover.
- For on-wall or switching panel installation.
- Permitted ambient temperature during operation 0 °C to 50 °C.

For installation in a switching cabinet a supplementary sensor is necessary.

Fixed setting controller RKP 111A

Continuous operation, simple controller: size equivalent to a thermostat, with three point setting signal. Temperature sensor and set point component are integrated in the device. Installation with strap-on band directly on heating pipe or with immersion well – protection pipe (see accessories). Also available with external sensor RFT 310A or RFT 302A e.g. for installation in casing or switching cabinet (see accessories). Wiring: mains supply 230 V/ 50 Hz and connection to actuator.

Strap-on sensor RFT 301A

- With strap fastening
- Measurement range –30 °C to +120 °C.
- Measurement element PT 1000.
- Application range –30 °C to +120 °C.

Immersion sensor PT1000/6

(without immersion well)

- Diameter 6 mm
- Cable length 2.5 m

Applications

- Flow temperature control
- Lower limit monitoring of the return Flow temperature
- Heat exchanger control

Examples for use

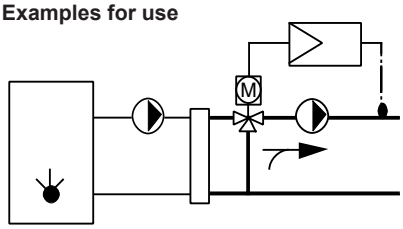

Flow temperature control

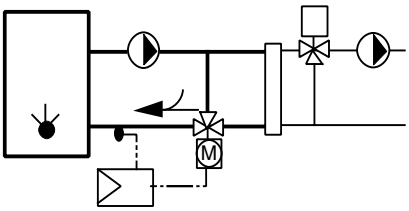

Lower limit monitoring of the boiler return flow temperature

Part No.

	Flow temperature control or lower limit monitoring of the boiler return flow temperature	Part No.
	**Fixed setting controller RKP 111A 003 (PI)** 0-120 °C, without sensor	2022 838
	**Installation set RZB070/RZB071** for RKP 111A 003 for installation on DIN standard rail	2022 839
	**Contact sensor RFT 301A** for RKP 111A	2018 843
	**Immersion sensor TF/1.1P/2.5/6T, L = 2.5 m FW** for TopTronic® E basic module district heating/ fresh water, basic module district heating com, fixed setting controller RKP - Sensor for district heating applications (PT1000) - Cable length: 2.5 m without plug (plug supplied with controller module/module expansion) - Sensor sleeve - Diameter: 6 x 50 mm - Dewpoint-proof - Sensor may already be included in scope of delivery of heat generator/controller module/ module expansion - Operating temperature: -50…105 °C - Index of protection: IP67	2056 777
	**Protective pipe immersion sleeve SB100 ½"** brass nickel-plated PN 10, 100 mm	2018 835

Technical data

Controller RKP 111A 003
Continuous electronic fixed setting controller with PI action.

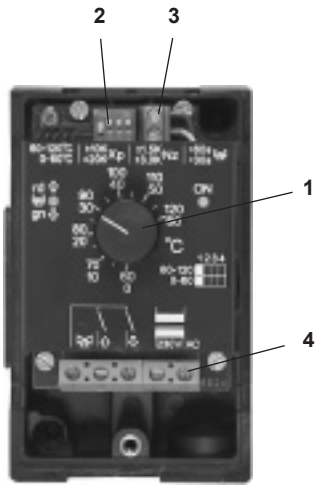

1	Set point scale switchable 0-60 °C or 60-120 °C		
2	DIP switch:	set point	DIP1OFF 0..60°C / DIP1ON 60..120°C
		proportional range Xp	DIP2OFF ±20K / DIP2ON ±10K
		neutral zone Nz	DIP3OFF ±3.0K / DIP3ON ±1.5K
		mixer run-time	DIP4OFF ≥30s / DIP4ON ≥60s
3	Connection terminals for sensor PT 1000		
4	Connection terminals for sensor 230 VAC		

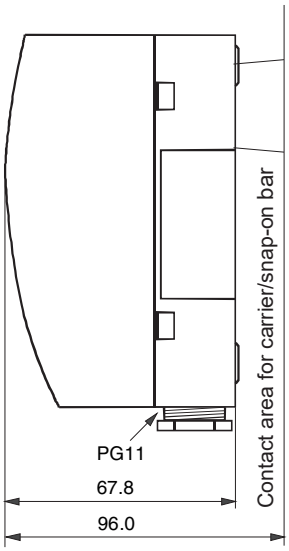

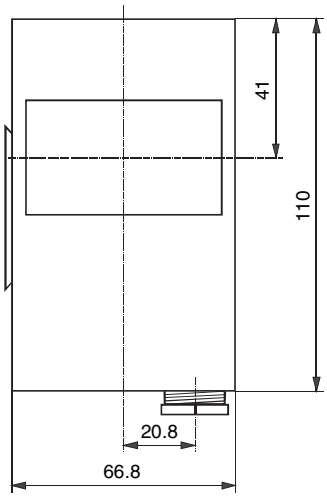

Terminals

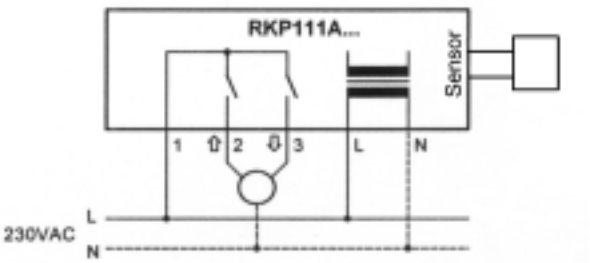

L	Phase operational voltage
N	Neutral
1	Phase potential free control contacts
2	Output “open” for setting motor
3	Output “closed” for setting motor
Sensor	Terminals for sensor PT 1000

Engineering

TopTronic® E

The TopTronic® E controller system is based on independent controller units (modules) that are connected together via the Hoval CAN bus. The individual modules are set using a central operating unit (master operation).

Max. 16 controller modules can be connected. Of these, max. 8 modules can be equipped as basic module heat generators (TTE H-Gen).

Max. 2 module expansions can be connected to the controller modules.

Notice
Max. 1 module expansion can be connected to the basic module heat generator (TTE-WEZ)!

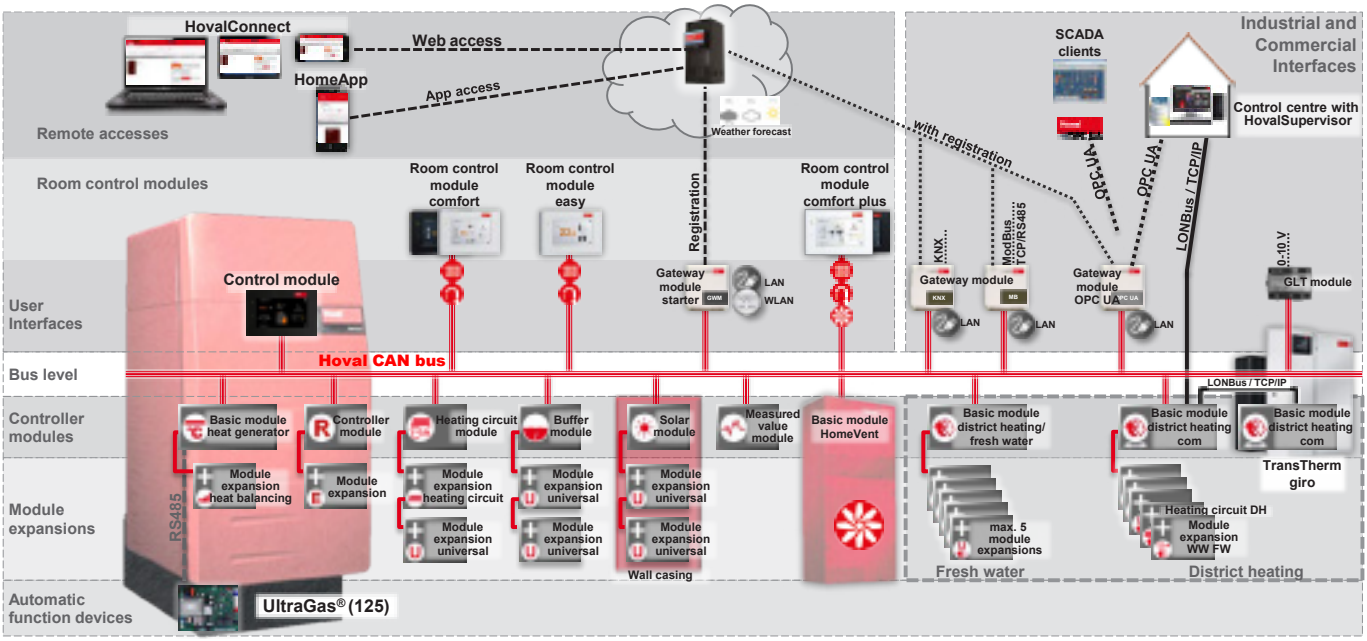

Engineering

Number of TopTronic® E modules that can be installed in the heat generator:

TopTronic® E / Heat generator	Basic module heat generator (TTE-WEZ)	Heating circuit/hot water module (TTE-HK/WW) or buffer module (TTE-PS) or solar module (TTE-SOL) or module expansion (TTE-FE)*	Heating circuit/hot water module (TTE-HK/WW) or buffer module (TTE-PS) or solar module (TTE-SOL) or module expansion (TTE-FE)*	Heating circuit/hot water module (TTE-HK/WW) or buffer module (TTE-PS) or solar module (TTE-SOL) or module expansion (TTE-FE)*	Heating circuit/hot water module (TTE-HK/WW) or buffer module (TTE-PS) or solar module (TTE-SOL) or module expansion (TTE-FE)*
UltraSource B	installed	●	●	-	-
Belaria® comfort ICM	installed	●	●	-	-
Belaria® twin I/IR	installed	●	●	-	-
Belaria® twin A/AR (Electrical box option)	installed	●	●	●	-
Belaria® dual AR (60) (Electrical box option)	installed	●	●	●	-
UltraSource T	installed	●	●	-	-
Thermalia® comfort	installed	●	●	-	-
Thermalia® twin	installed	●	●	-	-
Thermalia® dual	installed	●	●	-	-
BioLyt (13-43)	installed	●	●	-	-
BioLyt (50-150/160)	installed	●	●	●	-
TopGas® comfort	(can be installed)	-	-	-	-
TopGas® combi	no modules can be installed				
TopGas® classic (12-30)	no modules can be installed				
TopGas® classic (35-80)	(can be installed)	-	-	-	-
TopGas® classic (100,120)	(can be installed)	-	-	-	-
UltraGas® (15-300)	installed	●	●	-	-
UltraGas® (350-500)	installed	●	●	●	-
UltraGas® (575-1000)	installed	●	●	●	●
UltraGas® (250D-600D) (per boiler)	installed	●	●	-	-
UltraGas® (700D-1150D) (per boiler)	installed	●	●	●	-
UltraGas® (1150D-2300D) (per boiler)	installed	●	●	●	●
CompactGas	installed	●	●	●	-
MultiJet® (12-25)	installed	●	●	-	-
MultiJet® LSP (12-20)	installed	●	●	-	-
UltraOil® (16-80)	installed	●	●	-	-
UltraOil® (110-300)	installed	●	●	●	-
UltraOil® (320D-600D) (per boiler)	installed	●	●	●	-
Max-3 (420-6000)	installed	●	●	●	-

* Max. 2 module expansions can be connected to the controller modules.

Exception:
Max. 1 module expansion can be used with the basic module heat generator!

TopTronic® E / Heat generator	Basic module district heating com (TTE-FW com)	Module expansion district heating (TTE-FE FW)	Module expansion district heating (TTE-FE FW)	Module expansion district heating (TTE-FE FW)	Module expansion district heating (TTE-FE FW)	Module expansion district heating (TTE-FE FW)	Ethernet connection
TransTherm giro	installed	●	●	-	-	-	●
TransTherm giro plus	installed	-	-	-	-	-	●
TransTherm pro comfort	installed	no further modules can be installed					
TransTherm pro S/RS	installed	●	●	●	●	●	●

TopTronic® E / Calorifier charging module	Basic module district heating/ fresh water (TTE-FW)	Module expansion district heating (TTE-FE FW)	Module expansion district heating (TTE-FE FW)	Module expansion district heating (TTE-FE FW)
TransTherm aqua L	installed	no further modules can be installed		
TransTherm aqua F	installed	no further modules can be installed		

Engineering

Sample order
TopTronic® E components

System	MultiJet®	Hot water Design/type Free-standing tank	Heating circuit assembly Connection type Calorifier before distributor 1 DC + 1-...MC
BEAE040			

System	Solar collectors	Hot water Design/type Free-standing tank (2 coils)
BAAE020		

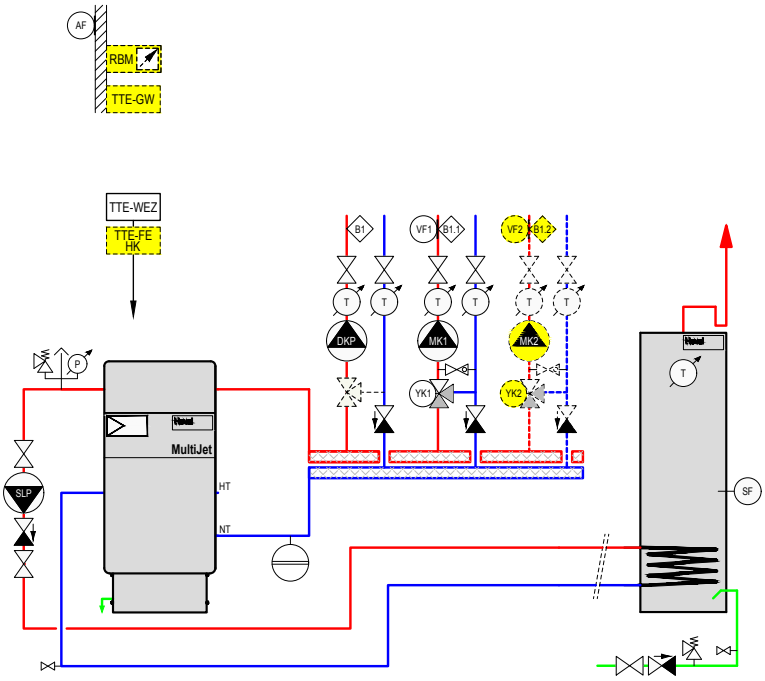

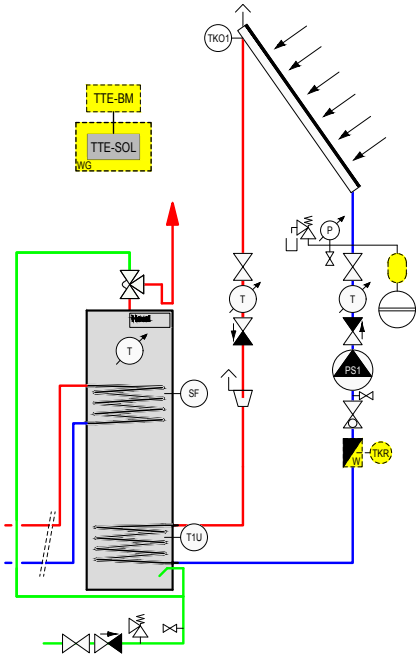

Designation		Part No.	Functions
TTE-WEZ	**TopTronic® E basic module heat generator**	installed	
TTE-SOL	**TopTronic® E solar module**	6037 058	• Control unit with integrated regulating functions for: - One/two circuit solar energy plants - integrated heat balancing - Various additional functions
Optional			
RBM	**TopTronic® E room control module**		• Operation of the Hoval heating system from the living area
	TopTronic® E room control module easy white	6037 071	
	TopTronic® E room control module comfort white	6037 069	
	TopTronic® E room control module comfort black	6037 070	
TTE-GW	**TopTronic® Gateway**		• App or browser access permits access to the entire TopTronic® E system
	HovalConnect domestic starter LAN	6049 496	
	HovalConnect commercial starter LAN	6049 495	
	HovalConnect domestic starter WLAN	6049 498	
	HovalConnect commercial starter WLAN	6049 497	
TTE-FE HK	**TopTronic® E module expansion heating circuit**	6034 576	• Expansion to the inputs and outputs of the basic module heat generator or the heating circuit/domestic hot water module for implementing the following functions: - 1 heating/cooling circuit w/o mixer or - 1 heating/cooling circuit with mixer

Further information
see separate chapter in the
“Controls” chapter

Engineering

Safety measures for EMC-compliant installation

- Cables carrying mains voltage must be routed separately from sensor or data bus cables. A minimum distance of 2 cm between the cables must be observed. Cable crossovers are permitted.

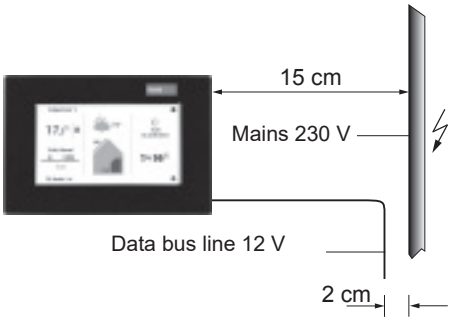

Fig. 1: Minimum distances for electrical installation

- In the case of controller modules with their own mains supply, it is imperative that cables carrying mains voltage are routed separately from sensor or data bus cables. If cable ducts are used, these must be provided with separator strips.
- When installing controller modules or room control modules, maintain a minimum clearance of 40 cm from other electrical devices with electromagnetic emissions, such as power contactors, motors, transformers, dimmers, microwave ovens and TV sets, loudspeakers, computers, mobile phones, etc.

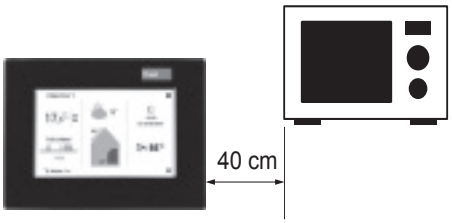

Fig. 2: Minimum distance from other electrical units

- Avoid unnecessary cable lengths, including in spare cables
- Coils of relays, contactors and other inductors in the panel, and possibly in the vicinity, must be connected. The connection can be made with RC elements, for example.
- Measures must be taken in the building and on electrical equipment to protect the devices against overvoltage caused by lightning strikes
- The mains connection for the heating system must be designed as an independent electrical circuit. Neither fluorescent lamps nor other sources of interference for the relevant machinery may be connected or capable of connection.

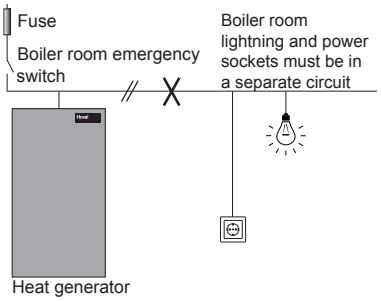

- Equipotential bonding must be established between the individual control components, control panels and the heating system
- Shielded cables must be used for the data cables.
  Recommended versions:
  J-Y(ST)Y 2 x 2 x 0.6 mm
- Shields of data cables, analog signal cables and power cables must be connected to earth over a large area with a highly conductive connection. The cable shields must be connected to a shield bar directly after the entry of the cable into the panel.
- Multiple earthing of a cable is not permitted (ripple pickup)

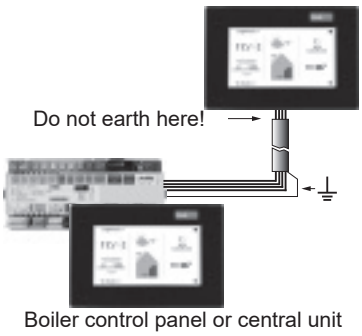

Fig. 4: One-sided earthing of the shielding

In the case of star-shaped data bus networks, double earthing is not permitted. The earthing must be effected one-sided at the star point!

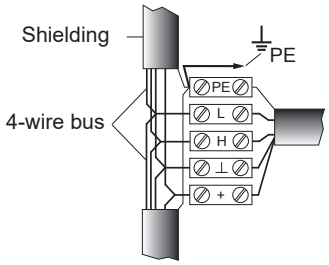

Fig. 5: Earthing for star-shaped data bus

- The outdoor sensor must not be fitted in the vicinity of transmitters and receivers (on garage walls near receivers for garage door openers, amateur radio antennae, radio alarm installations or in the immediate vicinity of large transmitters etc.).

Maximum permitted cable lengths for cables carrying sensor and low voltage (without PWM):
- Min. 0.5 mm²
- Max. permitted cable length: 50 m
- Max. PWM cable length according to pump specification

Longer connecting cables should be avoided because of the danger of radiated interference!

Inter-building installations
- Inter-building installations and laying the bus line underground are not permitted
- Where possible, avoid routing low-voltage and safety extra-low voltage cables (CAN bus line) in parallel in adjacent buildings (overbuildings) or through underground car parks. If this cannot be avoided, one or more of the following options should be selected to improve the decoupling:
  - Increase the spacing distance
  - Route cables in a metal cable tray or metal cable duct that is enclosed on all sides, and must be well earthed
  - Use high-quality twisted-pair cables
- Potential differences between CAN_H, CAN_L and ground must be kept low
- If there are higher potential differences, the frequency of errors will increase until the point when bus traffic is completely blocked

Advantage of an inter-building installation
- Bus modules can be connected together, communication of reference values

Disadvantages of an inter-building installation
- Increased susceptibility to interference, communication problems
- Voltage surge damage

To ensure correct electrical installation, unit connection and equipotential bonding (energy supply company and building installation), all applicable laws, regulations and standards must be complied with; in particular, the regulations of the responsible energy supply company. Common equipotential bonding must be carried out in accordance with the regulations and standards. The cable shield is not allowed to be used for equipotential bonding.
The work is only allowed to be carried out by qualified specialist personnel. It is the responsibility of the electrician to ensure appropriate EMC installation.

Engineering

Weather sensor
- Install 2/3 of the way up the facade, not above windows or under porch roofs
- Place on the side of the building where the rooms important for measuring the temperature are located, as follows:

Main rooms distributed
- Install the sensor on the north wall or the north-west corner

South-facing main rooms
- Install the sensor on the west wall if there are thermal radiator valves, otherwise on the south wall

East-facing main rooms
- Protect the sensor against the morning sunlight
- If the weather sensor is exposed to full sunlight for more than 2 hours, we recommend the sensor should be covered

Room air sensor
- Place on an interior wall in the main occupied room. Do not expose to sunlight or effects of other heat sources (chimney wall, proximity to radiators, draughts, TV set, light source)
- Do not cover by furniture or curtains
- Approx. 1.6 m above the floor
- Seal the installation pipe to prevent draughts
- No thermostatic valves are allowed to be used in the same room

Flow temperature sensor
- Mount on the heating flow. If the pump is in the flow, mount it immediately after the pump. If the pump is in the return, mount approx. 1.5 m after the mixing point.
- Mount the contact sensor on the bare metal flow pipe
- Attach the immersion sensor in a pipe bend so the immersion sleeve is pointing opposite to the flow

Return temperature sensor
- Mount directly before the boiler return connection
- Mount the contact sensor on the bare metal pipe
- Attach the immersion sensor in a pipe bend so the immersion sleeve is pointing opposite to the flow

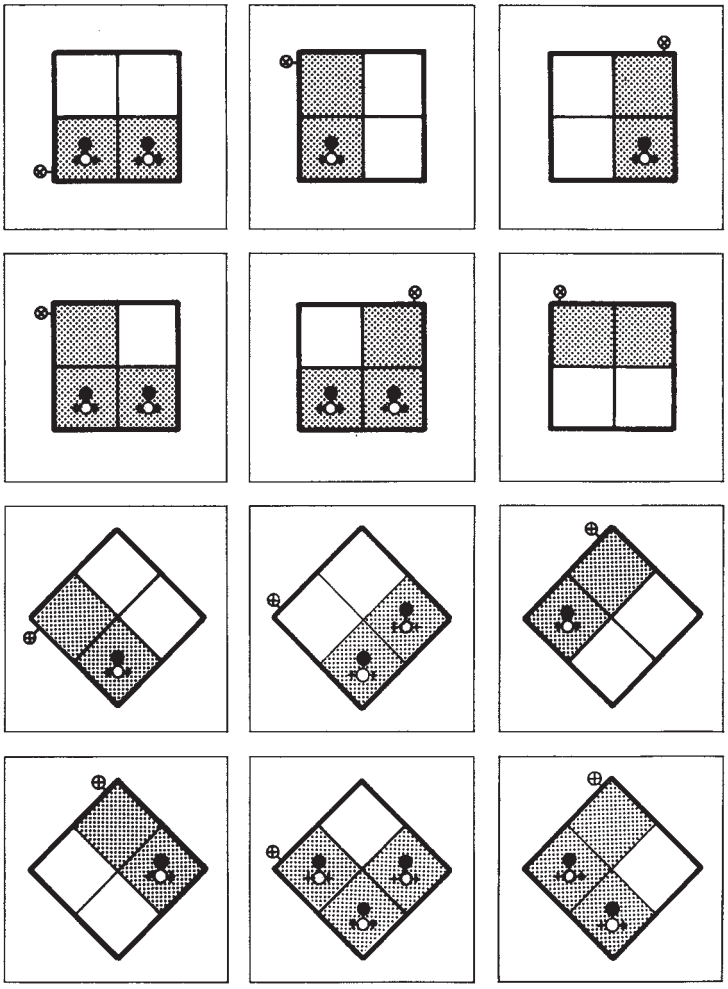

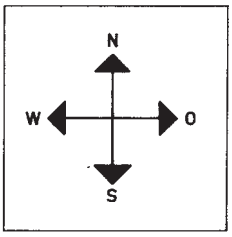

Outdoor jsensor

Thermostatic Radiator valve

Main rooms

Description

Heating armature group for mixer circuit

- Suitable for wall distributor construction
- With 3-way motor mixer
- 2 ball valves with thermometer
- Heat-insulating box made of EPP half shells
- Heating flow/pump left

HA20-3BM-R (¾″), HA25-3BM-R (1″), HA32-3BM-R (1¼″)
Fully assembled and electrically wired with:
- connecting cable with plug for TopTronic® controller
- 3-way motor mixer with integrated bypass, adjustable from 0-50 %
- backflow preventer with deaeration adjusting screw
- Heating circuit pump (enclosed separately)

Optional
- Type HA25 and HA32 are also available without pump.

HA40-3M-R (1½″), HA50-3M-R (2″)
Without connecting cable and plug, electrically unwired with:
- backflow preventer with deaeration adjusting screw
- without pump (must be ordered separately)

Delivery
- Heating armature group completely packaged
- Pump separately
- Optional bypass valve available

On site
- Conversion option to heating flow/pump right
- Installation of the pump (DN 20-DN 32)
- Mounting of the bypass valve (DN 20-DN 32, option)

Optional
- Type HA40 and HA50 are also available without pump.

Heating armature group HA-3BM-L for mixer circuit

- Design as heating armature group HA-3BM-R, but: heating flow/pump right

Loading group LG-2 Heating armature group HA-2

- For the connection of a side calorifier or as heating circuit without mixer
- Suitable for wall distributor construction
- 2 ball valves with thermometer
- Heat-insulating box made of EPP half shells
- Heating flow/pump left

LG/ HA20-2 (¾″), LG/ HA25-2 (1″), LG/ HA32-2 (1¼″)
Fully assembled and electrically wired with:
- connecting cable with plug for TopTronic® controller
- backflow preventer (enclosed separately)
- Pump (enclosed separately)

Optional
- Type LG/HA25-2 and LG/HA32-2 are also available without pump.

LG/ HA40-2 (1½″), LG/ HA50-2 (2″)
Without connecting cable and plug, electrically unwired with:
- non-return valve with deaeration adjusting screw
- without pump (must be ordered separately)

Delivery
- Armature group completely packaged
- Pump separately

On site
- Conversion option to heating flow/pump right
- Installation of the pump (DN 20-DN 32)

Optional
- Type HA40 and HA50 are also available without pump.

Loading group LG25-2 Compact for the direct installation at side calorifier

- For the connection of a side calorifier
- Installation directly on the calorifier ER (200-500), CR (200-1000) or without connecting bend in the feed line or at the boiler
- 1 ball valve pressure-side with non-return valve
- 1 ball valve suction-side with thermometer completely assembled and electrically wired with:
  - connecting cable with plug for TopTronic® controller
  - loading circuit pump (enclosed separately)
- Heat-insulating box made of EPP half shells
- Fully isolated connection bend with screw joint (enclosed separately)

Delivery
- Loading group with connection bend completely packaged.
- Pump (enclosed separately)

On site
- Installation of the connection bend
- Installation of the pump

Information relating to pumps
see “Circulating pumps”

Description

Bypass groups
BG25-3 (1″), BG32-3 (1¼″)
- Bypass with fittings
- Without pump
- Suitable for the installation under the wall distributor

Standard pressure distributor WV-S
Not upgradeable
WV-S 25-2/3 (1″)
- Pressure distributor (bronze) for
  - 2 armature groups DN25 on the top
  - 1 armature group DN25 at the bottom (in connection with the connection set WV-S 25-U)
- Thermal insulation made of EPP shells
- Bracket for installation
- Variable connections boiler-side

System pressure distributor WV-M
Upgradeable
WV-M 20 (¾″), WV-M 25 (1″), WV-M 32 (1¼″), WV-M 40 (1½″), WV-M 50 (2″)
- Bronze pressure distributor
- Thermal insulation made of EPP shells; DN 20 (¾″) with heat-insulating caps; the actual insulation is done by the heat-insulating box of the HA group
- Bracket for installation, DN 40 and 50 without bracket
- Variable connections boiler-side

On site
- Upgrade options for additional armature groups
- Conversion to pressureless design possible (only DN 20-32)

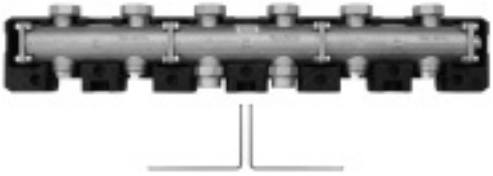

Mounting console for wall installation
MKW-WV 40
For installing the pressure distributor WV-M 40 on the wall. 1 set 2 pieces each

For wall distributors with more than 4 HA groups absolutely use console for floor installation!

Mounting console for floor installation
MKW-WV 40/50
For installing the pressure distributor WV-M 40 and WV-M 50 on the floor. 1 set 2 pieces each

For wall distributors with up to 4 HA groups 1 set, for wall distributors with more than 5 HA groups 2 sets required!

Upgrade module EW-WV
DN 20, 25, 32 without insulation, a new insulation must be ordered for the upgraded distributor.
DN 40, 50 with insulation

Steel pressure distributor SWV
Not upgradeable
SWV 25 (1″), SWV 32 (1¼″)
- Pressure distributor made of steel, galvanised
- Thermal insulation made of EPP shells
- Bracket for installation
- Variable connections boiler-side

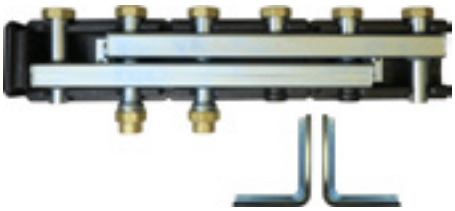

Description
Selection table

Selection recommendation heating armature group (HA)

HA..-2 direct heating circuit											
Volume flow	Dimension	Pressure drop	Output [kW] at ΔT of…			Residual overpressure [mbar]					
V̇ [m³/h]	[DN]	ΔP [mbar]	15 [K]	20 [K]	25 [K]	HSP 4	HSP 6	SPS-S 7	SPS-S 8	SPS-I 8	SPS-I 12
0.2		2	3.5	4.6	6	378	593	698	798		
0.4		7	6.9	9.2	12	333	588	693	793		
0.6		16	10	14	17	294	564	684	784		
0.8		29	14	18	23	256	491	671	771		
1.0	20	45	17	23	29	210	440	635	755		
1.2		65	21	28	35		385	565	735		
1.4		89	24	32	40		321	491	671		
1.6		116	28	37	46		264	394	594		
1.6		49	28	37	46		331	461	661	751	
1.8		63	31	42	52		278	398	578	738	
2.0	25	77	35	46	58			353	523	723	
2.2		93	38	51	64				467	707	
2.4		111	42	55	69				389	669	
2.4		25	42	55	69				475	755	
2.6		30	45	60	75				430	730	
2.8		34	49	65	81				386	706	
3.0		39	52	69	87				331	681	
3.2		45	55	74	92					655	
3.4	32	51	59	79	98					619	
3.6		57	62	83	104					593	
3.8		63	66	88	110					577	
4.0		70	69	92	116					540	
4.5		89	78	104	130					481	
5.0		110	87	116	145					410	
5.0		31	87	116	145					489	1119
5.5		38	95	127	159					442	1062
6.0		45	104	139	173					365	965
6.5		53	113	150	188					327	897
7.0		61	121	162	202						839
7.5	40	70	130	173	217						780
8.0		80	139	185	231						700
8.5		90	147	197	246						640
9.0		101	156	208	260						549
9.5		113	165	220	275						487
10.0		125	173	231	289						415
5.0		26	87	116	145					494	1124
5.5		31	95	127	159					449	1069
6.0		37	104	139	173					373	973
6.5		43	113	150	188					337	907
7.0		50	121	162	202						850
7.5	50	58	130	173	217						792
8.0		66	139	185	231						714
8.5		74	147	197	246						656
9.0		83	156	208	260						567
9.5		93	165	220	275						507
10.0		103	173	231	289						437
10.5		113	182	243	303						357

Example: *The pressure drop must be matched with the residual overpressure of the pump used.*

Direct (without mixer) circuit 18 kW at Δt 20 K, results in a heating armature group HA 20-2.

With a HSP 4-pump, there is a residual overpressure of 256 mbar.

Description

Selection table

HA...-3 mixed heating circuit													
Volume flow	Dimension	Pressure drop	Output [kW] at ΔT of…					Residual overpressure [mbar]					
V̇ [m³/h]	[DN]	ΔP [mbar]	7 [K]	10 [K]	15 [K]	20 [K]	kvs	HSP 4	HSP 6	SPS-S 7	SPS-S 8	SPS-I 8	SPS-I 12
0.2	20	3	1.6	2.3	3.5	4.6	3.7	377	592	697	797		
0.4		12	3.2	4.6	6.9	9.2	3.7	328	583	688	788		
0.6		26	4.9	6.9	10	14	3.7	284	554	674	774		
0.8		47	6.5	9.2	14	18	3.7	238	473	653	753		
1.0		73	8.1	12	17	23	3.7		412	607	727		
1.2		105	10	14	21	28	3.7		345	525	695		
1.2	25	40	10	14	21	28	6.0		410	590	760	760	
1.4		54	11	16	24	32	6.0		356	526	706	746	
1.6		71	13	18	28	37	6.0		309	439	639	729	
1.8		90	15	21	31	42	6.0		250	370	550	710	
2.0		111	16	23	35	46	6.0			319	489	689	
2.0	32	39	16	23	35	46	10.1			391	561	761	1111
2.2		47	18	25	38	51	10.1			303	513	753	1103
2.4		56	19	28	42	55	10.1				444	724	1094
2.6		66	21	30	45	60	10.1				394	694	1084
2.8		77	23	32	49	65	10.1				343	663	1073
3.0		88	24	35	52	69	10.1					632	1062
3.2		100	26	37	55	74	10.1					600	1050
3.4		113	28	39	59	79	10.1					557	1037
3.4	40	37	28	39	59	79	17.7					633	1113
3.6		41	29	42	62	83	17.7					609	1109
3.8		46	31	44	66	88	17.7					594	1104
4.0		51	32	46	69	92	17.7					559	1099
4.5		65	36	52	78	104	17.7					505	1085
5.0		80	40	58	87	116	17.7					440	1070
5.5		97	45	64	95	127	17.7					383	1003
6.0		115	49	69	104	139	17.7					295	895
6.0	50	55	49	69	104	139	25.7					355	955
6.5		64	53	75	113	150	25.7					316	886
7.0		74	57	81	121	162	25.7						826
7.5		85	61	87	130	173	25.7						765
8.0		97	65	92	139	185	25.7						683
8.5		109	69	98	147	197	25.7						621
9.0		123	73	104	156	208	25.7						527

Example: *The pressure drop must be matched with the residual overpressure of the pump used.*

Mixer circuit 18 kW at Δt 10 K, results in a heating armature group HA 25-3.

With a HSP 6-pump, there is a residual overpressure of 250 mbar.

Description
Selection table

Selection recommendation wall distributor (WV)

Volume flow	Output [kW] at ΔT of…				Distributors WV-M..-2					Distributors WV-M..-3					Distributors WV-M..-4					Distributors WV-M..-5				
					Residual overpressure [mbar]					Residual overpressure [mbar]					Residual overpressure [mbar]					Residual overpressure [mbar]				
					DN					DN					DN					DN				
[m³/h]	ΔT 7 K	ΔT 10 K	ΔT 15 K	ΔT 20 K	20	25	32	40	50	20	25	32	40	50	20	25	32	40	50	20	25	32	40	50
0.2	1.6	2.3	3.5	4.6	1					1					1					1				
0.4	3.2	4.6	6.9	9.2	3					3					3					2				
0.6	4.9	6.9	10	14	7					6					6					5				
0.8	6.5	9.2	14	18	13					11					10					10				
1.0	8.1	12	17	23	20					16					16					15				
1.2	10	14	21	28	29					24					23					22				
1.4	11	16	24	32	39					32					31					30				
1.6	13	18	28	37	51	8				42	6				40	5				39	5			
1.8	15	21	31	42		10					7				51	7				49	6			
2.0	16	23	35	46		12					9					8					8			
2.2	18	25	38	51		15					11					10					9			
2.4	19	28	42	55		18	5	5	2		13	4	6	2		12	4	6	3		11	4	6	3
2.6	21	30	45	60		21	6	6	3		15	5	7	3		14	5	8	3		13	5	8	3
2.8	23	32	49	65		24	7	7	3		18	6	8	3		16	5	9	4		15	5	9	4
3.0	24	35	52	69		28	8	8	4		20	7	9	4		19	6	10	4		17	6	10	4
3.2	26	37	55	74		32	9	10	4		23	7	10	4		21	7	11	5		19	7	11	5
3.4	28	39	59	79		36	10	11	5		26	8	11	5		24	8	13	5		22	8	13	5
3.6	29	42	62	83		40	11	12	5		29	9	13	5		27	9	14	6		24	9	14	6
3.8	31	44	66	88		45	12	13	6		33	11	14	6		30	10	16	7		27	10	16	7
4.0	32	46	69	92		49	14	15	6		36	12	16	7		33	11	18	7		30	11	18	7
4.5	36	52	78	104			18	19	8			15	20	8		42	14	23	9		38	14	23	9
5.0	40	58	87	116			22	23	10			18	25	10			17	28	12		47	17	28	12
5.5	45	64	95	127			26	28	12			22	30	13			21	34	14			21	34	14
6.0	49	69	104	139			31	33	14			26	35	15			25	40	17			25	40	17
6.5	53	75	113	150			37	39	17			31	42	18			29	47	19			29	47	19
7.0	57	81	121	162			42	46	20			36	48	20			34		23			34		23
7.5	61	87	130	173			49		22			41		24			39		26			39		26
8.0	65	92	139	185					25			47		27			44		29			44		29
8.5	69	98	147	197					29					30			50		33			50		33
9.0	73	104	156	208					32					34					37					37
9.5	77	110	165	220					36					38					42					42
10.0	81	116	173	231					40					42					46					46

Total volume flow = 0.8 + 1.6 = 2.4 m³/h.
The next largest volume flow is selected.
This results in a distributor WV-M 25-2, with a total pressure drop of 18 mbar.

The distributor should have at least the nominal diameter of the largest HA groups.

■ **Description**
Selection table

Selection recommendation steel pressure distributor (SWV)

Volume flow	Output [kW] at ΔT of…					Heating wall distributor SWV..-2		Heating wall distributor SWV..-3	
						Residual overpressure [mbar]		Residual overpressure [mbar]	
						DN		DN	
[m³/h]	ΔT 7 K	ΔT 10 K	ΔT 15 K	ΔT 20 K	ΔT 25 K	25	32	25	32
1.2	10	14	21	28	35	3		3	
1.4	11	16	24	32	40	4		4	
1.6	13	18	28	37	46	5		5	
1.8	15	21	31	42	52	6		6	
2.0	16	23	35	46	58	7		7	
2.2	18	25	38	51	64	9		9	
2.4	19	28	42	55	69	11	2	11	2
2.6	21	30	45	60	75	13	3	13	2
2.8	23	32	49	65	81	15	3	15	3
3.0	24	35	52	69	87	17	3	17	3
3.2	26	37	55	74	92	19	4	19	4
3.4	28	39	59	79	98	22	4	22	4
3.6	29	42	62	83	104	24	5	24	5
3.8	31	44	66	88	110	27	5	27	5
4.0	32	46	69	92	116	30	6	30	6
4.5	36	52	78	104	130	38	8	38	7
5.0	40	58	87	116	145	47	9	47	9
5.5	45	64	95	127	159		11		11
6.0	49	69	104	139	173		13		13
6.5	53	75	113	150	188		16		15
7.0	57	81	121	162	202		18		18
7.5	61	87	130	173	217		21		20
8.0	65	92	139	185	231		24		23
8.5	69	98	147	197	246		27		26
9.0	73	104	156	208	260		30		29
9.5	77	110	165	220	275		34		33
10.0	81	116	173	231	289		37		36

Part No.

Heating armature groups	Speed control: Δp-v	ENF (air)	PWM1 or PM1	Δp-c	EEI ≤	Part No.
Heating armature group HA-3BM-R with 3-way motor mixer and heat-insulating box. Installation right (flow left)						
DN 20 (¾″)						
HA20-3BM-R/HSP 4	●			●	0.20	6043 993
HA20-3BM-R/HSP 6	●			●	0.20	6043 994
HA20-3BM-R/SPS-S 7	●	●		●	0.20	6049 541
HA20-3BM-R/SPS-S 8	●	●		●	0.20	6049 542
DN 25 (1″)						
HA25-3BM-R/HSP 6	●			●	0.20	6046 609
HA25-3BM-R/SPS-S 7	●	●		●	0.20	6049 545
HA25-3BM-R/SPS-S 8	●	●		●	0.20	6049 546
HA25-3BM-R/SPS-I 8 PM1	●		●	●	0.23	6046 612
HA25-3BM-R	without pump					6046 642
Pumps for HA25-3BM-R see “Circulating pumps”. Pump installation dimensions 1½″ x 180 mm						
DN 32 (1¼″)						
HA32-3BM-R/SPS-S 7	●	●		●	0.20	6049 549
HA32-3BM-R/SPS-S 8	●	●		●	0.20	6049 550
HA32-3BM-R/SPS-I 8 PM1	●		●	●	0.23	6046 618
HA32-3BM-R/SPS-I 12 PM1	●		●	●	0.23	6046 619
HA32-3BM-R	without pump					6046 643
Pumps for HA32-3BM-R see “Circulating pumps”. Pump installation dimensions 2″ x 180 mm						
DN 40 (1½″)						
HA40-3M-R/SPS-I 8 PM1	●		●	●	0.23	6040 903
HA40-3M-R/SPS-I 12 PM1	●		●	●	0.23	6040 904
HA40-3M-R	without pump					6014 867
Pumps for HA40-3M see “Circulating pumps”. Pump installation dimensions DN 40/PN 6 x 250 mm						
DN 50 (2″)						
HA50-3M-R/SPS-I 12 PM1	●		●	●	0.23	6040 905
HA50-3M-R	without pump					6014 869
Pumps for HA50-3M-R see “Circulating pumps”. Pump installation dimensions DN 50/PN 6 x 280 mm						

Speed control legend	
Δp-v	Variable differential pressure
ENF	Vent function 10 min.
PWM1 or PM1	PWM control signal heating
Δp-c	Constant differential pressure

Part No.

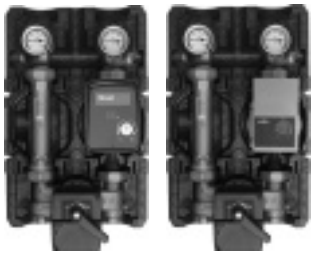

Heating armature groups						Part No.
Heating armature group HA-3BM-L with 3-way motor mixer and heat-insulating box. Installation left (flow right)						
HA group/pump	Speed control				EEI ≤	
DN 20 (¾")						
HA20-3BM-L/HSP 4	•			•	0.20	6043 999
HA20-3BM-L/HSP 6	•			•	0.20	6044 000
HA20-3BM-L/SPS-S 7	•	•		•	0.20	6049 543
HA20-3BM-L/SPS-S 8	•	•		•	0.20	6049 544
DN 25 (1")						
HA25-3BM-L/HSP 6	•			•	0.20	6046 621
HA25-3BM-L/SPS-S 7	•	•		•	0.20	6049 547
HA25-3BM-L/SPS-S 8	•	•		•	0.20	6049 548
HA25-3BM-L/SPS-I 8 PM1	•		•	•	0.23	6046 624
HA25-3BM-L	without pump					6046 644
Pumps for HA25-3BM-L see "Circulating pumps". Pump installation dimensions 1½" x 180 mm						
DN 32 (1¼")						
HA32-3BM-L/SPS-S 7	•	•		•	0.20	6049 551
HA32-3BM-L/SPS-S 8	•	•		•	0.20	6049 552
HA32-3BM-L/SPS-I 8 PM1	•		•	•	0.23	6046 630
HA32-3BM-L/SPS-I 12 PM1	•		•	•	0.23	6046 631
HA32-3BM-L	without pump					6046 645
Pumps for HA32-3BM-L see "Circulating pumps". Pump installation dimensions 2" x 180 mm						

Speed control legend	
Δp-v	Variable differential pressure
ENF	Vent function 10 min.
PWM1 or PM1	PWM control signal heating
Δp-c	Constant differential pressure

Part No.

Heating armature groups — Part No.

Loading group LG-2
Heating armature group HA-2
For the connection of a side calorifier or as heating circuit without mixer, with heat-insulating box. Installation right (flow left).

Charging/HA group/pump	Speed control				EEI ≤	Part No.
DN 20 (¾″)						
LG/HA20-2/HSP 4	●			●	0.20	6044 023
LG/HA20-2/HSP 6	●			●	0.20	6044 024
LG/HA20-2/SPS-S 7	●	●		●	0.20	6040 906
LG/HA20-2/SPS-S 8	●	●		●	0.20	6040 907
DN 25 (1″)						
LG/HA25-2/HSP 6	●			●	0.20	6046 633
LG/HA25-2/SPS-S 7	●	●		●	0.20	6049 553
LG/HA25-2/SPS-S 8	●	●		●	0.20	6049 554
LG/HA25-2/SPS-I 8 PM1	●		●	●	0.23	6046 636
LG/HA25-2	without pump					6046 646

Pumps for LG/HA25-2
see “Circulating pumps”.
Pump installation dimensions 1½″ x 180 mm

DN 32 (1¼″)						
LG/HA32-2/SPS-S 8	●	●		●	0.21	6049 555
LG/HA32-2/SPS-I 8 PM1	●		●	●	0.23	6046 641
LG/HA32-2	without pump					6046 647

Pumps for LG/ HA32-2
see “Circulating pumps”.
Pump installation dimensions 2″ x 180 mm

DN 40 (1½″)						
HA40-2/SPS-I 8 PM1	●		●	●	0.23	6040 914
HA40-2/SPS-I 12 PM1	●		●	●	0.23	6040 915
HA40-2	without pump					6014 868

Pumps for HA40-2
see “Circulating pumps”.
Pump installation dimensions DN 40/PN 6 x 250 mm

DN 50 (2″)						
HA50-2/SPS-I 12 PM1	●		●	●	0.23	6040 916
HA50-2	without pump					6014 870

Pumps for HA50-2
see “Circulating pumps”.
Pump installation dimensions DN 50/PN 6 x 280 mm

Speed control legend	
Δp-v	Variable differential pressure
ENF	Vent function 10 min.
PWM1 or PM1	PWM control signal heating
Δp-c	Constant differential pressure

Part No.

Heating armature groups					Part No.
Compact loading group LG-2 With heat-insulating box for the direct installation on the CombiVal with 1″-nozzle, in the feed line or on the boiler.					
Charging group/pump	Speed control			EEI ≤	
DN 25 (1″)					
LG 25-Compact/HSP 4	●		●	0.20	6044 029
LG 25-Compact/HSP 6	●		●	0.20	6044 030
LG 25-Compact/SPS-S 7	●	●	●	0.20	6049 556

Speed control legend	
Δp-v	Variable differential pressure
ENF	Vent function 10 min.
PWM1 or PM1	PWM control signal heating
Δp-c	Constant differential pressure

■ **Part No.**

Heating armature groups — Part No.

Heat meter installation section DN 25 — 6006 990
for mixed heating circuit
for heat meters:
¾″ x 110 mm or 1″ x 130 mm

Heat meter installation section DN 25 — 6006 991
for unmixed heating circuit
for heat meters:
¾″ x 110 mm or 1″ x 130 mm

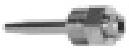

Thermometer well ½″
for temperature sensor for heat meter installation section

	D [mm]	L [mm]	
D 5.5/30 mm	5.5	30	2010 062
D 6.0/60 mm	6.0	60	2010 063

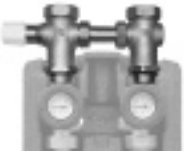

Bypass valve DN 20 (½″) — 6013 684
for the installation in a HA group DN 20
Pressure range 0.1-0.6 bar

Bypass valve DN 25 (1″) — 6046 875
for installation on a HA group DN 25
Pressure range 0.1 - 0.6 bar

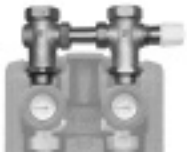

Bypass valve DN 32 (1¼″) — 6014 849
for the installation in a HA group DN 32
Setting range 0.6-1.5 bar
Max. flow rate: 1.5 m³/h
with self-sealing screw connection for mounting between flow and return ball valve

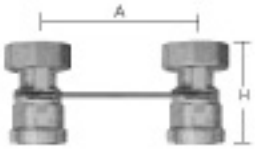

Holding plate
Suited to Hoval boiler connection set AS, for the installation of a Hoval loading group LG-2/unmixed HA group HA-2.

	A [mm]	H [mm]	
DN 25	125	60	2022 446
DN 32	125	70	2022 447

Wall bracket
for the installation of a Hoval armature group on the wall.

Type	Dimens. between centre lines mm	Connection Top	Connection Bottom	Wall distance mm	
DN 20	90	Rp 1″	R ¾″	70,85,100	6019 209
DN 25	125	Rp 1½″	R 1″	87-162	6019 210
DN 32	125	Rp 2″	R 1½″	142,167	6025 295

Bypass groups

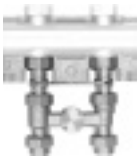

Bypass group BG25-3 — 6007 189
for boiler circuit
for the installation below the wall distributor
complete with fittings (without pumps)

■ **Part No.**

Wall distributor	Part No.

Standard pressure distributor
WV-S 25-2/3
DN 25 (1″)
wall distributor (not expandable)
of brass
for 2 armature groups on the top,
with heat insulation made of EPP shells,
including brackets.

6031 809

Screw fittings brass VSM21
Version brass incl. seals
2 x screw fittings
External thread: G 1½″
Internal thread: Rp 1″

6007 004

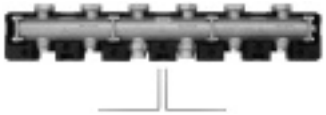

System pressure distributor expandable
Bronze wall distributor for 2 or 3 armature groups on top (expandable).
DN 20 without thermal insulation,
DN 25-DN 50 with thermal insulation.
DN 20-DN 32 including brackets,
DN 40/50 without brackets.
Variable connections boiler-side.
With separate components attachment of additional armature groups and conversion to pressureless operation possible.

Wall distributor type	HA groups	
DN 20 (¾″)		
WV-M 20-2	2 HA groups	6013 694
WV-M 20-3	3 HA groups	6013 695
DN 25 (1″)		
WV-M 25-2	2 HA groups	6046 648
WV-M 25-3	3 HA groups	6046 649
DN 32 (1¼″)		
WV-M 32-2	2 HA groups	6046 650
WV-M 32-3	3 HA groups	6046 651
DN 40 (1½″)		
WV-M 40-2	2 HA groups	6015 116
WV-M 40-3	3 HA groups	6015 117
DN 50 (2″)		
WV-M 50-2	2 HA groups	6015 143

Coupling console
For the installation of a HA group DN 25 below at the system pressure distributor

HA 25 to WV-M 25	2012 818
HA 32 to WV-M 32	2012 835

Console for wall installation MKW-WV 40
for installing a pressure distributor
WV-M 40 on the wall
Set (2 pieces)

6015 119

For wall distributors with more than 4 HA groups absolutely use console for floor installation!

■ **Part No.**

Wall distributor		Part No.

Console for floor installation
MKB-WV 40/50
for installing the pressure distributor
WV-M 40 or WV-M 50
supported on the floor
Set (2 pieces)

6015 120

For wall distributors with up to 4 HA groups 1 set, for wall distributors with 5 or more HA groups 2 sets necessary!

Upgrade module EW-WV-M
For wall distributors for the additional installation of an armature group. DN 20-DN 32 without thermal insulation, DN 40/50 including thermal insulation.

EW-WV-M 20	DN 20	6013 696
EW-WV-M 25	DN 25	6046 251
EW-WV-M 32	DN 32	6046 252
EW-WV-M 40	DN 40	6015 118
EW-WV-M 50	DN 50	6015 145

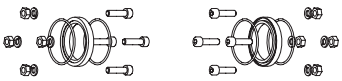

Pressureless kit
For the installation in system distributors WV-M for pressureless operation

DN 20	6012 738
DN 25	6046 341
DN 32	6046 342

Thermal insulation
EPP thermal insulation jacket for system wall distributor WV-M 25,32. Only required for expanding the system wall distributor.

Wall distributor type	HA groups	
DN 25 (1″)		
WV-M 25-3	For 3 HA groups	6006 956
WV-M 25-4	For 4 HA groups	6006 957
WV-M 25-5	For 5 HA groups	6008 872
WV-M 25-6	For 6 HA groups	6008 880
DN 32 (1¼″)		
WV-M 32-3	For 3 HA groups	6006 958
WV-M 32-4	For 4 HA groups	6006 959
WV-M 32-5	For 5 HA groups	6008 883
WV-M 32-6	For 6 HA groups	6008 881

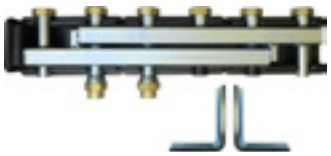

Steel pressure distributor
Wall distributor made of welded steel profiles for 2 or 3 armature groups on top (not expandable).
DN 25-DN 32 with thermal insulation, incl. supports.
Variable connections boiler-side.

Steel distributor - type	HA groups	
DN 25 (1″)		
SWV 25-2	for 2 HA groups	6046 652
SWV 25-3	for 3 HA groups	6046 653
DN 32 (1¼″)		
SWV 32-2	for 2 HA groups	6046 654
SWV 32-3	for 3 HA groups	6046 655

■ **Part No.**

	Wall distributors	Part No.
	**Adapter set DN20-DN25** for the installation of the HA group DN20 to a wall distributor DN25 or a connection set DN25. Installation height 120 mm	6013 693
	**Adapter fitting DN25-DN32** for the installation of the HA group DN25 to a wall distributor DN32.	6006 954
	Adapter fitting DN25-DN40 for the installation of the HA group DN25 to a wall distributor DN40.	6014 852
	Adapter fitting DN25-DN50 for the installation of the HA group DN25 to a wall distributor DN50.	6014 864
	**Adapter set DN32-DN25** for the installation of the HA group DN32 to a wall distributor DN25.	6006 953
	**Adapter set DN32-DN25** for the installation of the HA group DN32 to a connection set DN25.	6007 191
	**Adapter fitting DN32-DN40** for the installation of the HA group DN32 to a wall distributor DN40 or a connection set AS40-S/NT/ HT.	6014 863
	**Adapter fitting DN32-DN50** for the installation of the HA group DN32 to a wall distributor DN50.	6014 865
	**Adapter fitting DN40-DN50** for the installation of the HA group DN40 to a wall distributor DN50.	6014 866

Technical data

Pressure drop heating armature groups

HA-2 heating circuit without mixer

DN 20, DN 25, DN 32

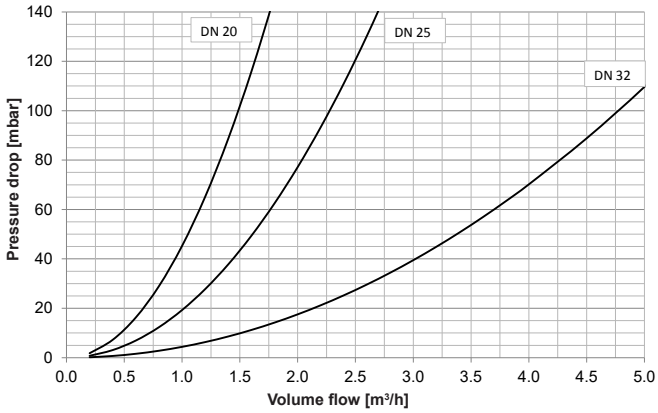

DN 40, DN 50

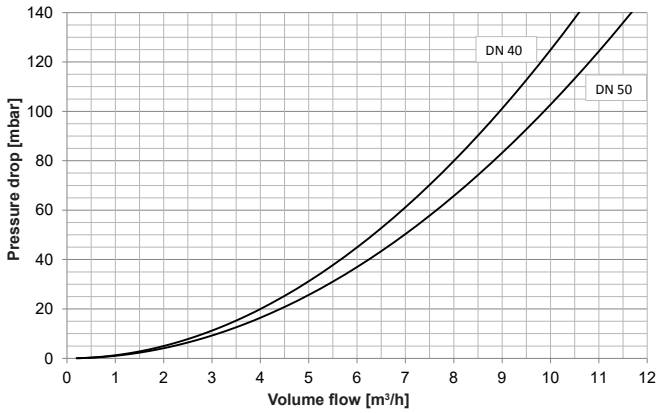

HA-3 heating circuit with mixer

DN 20, DN 25, DN 32

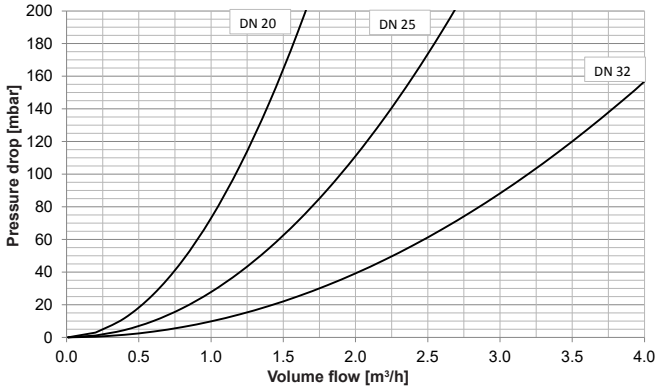

DN 40, DN 50

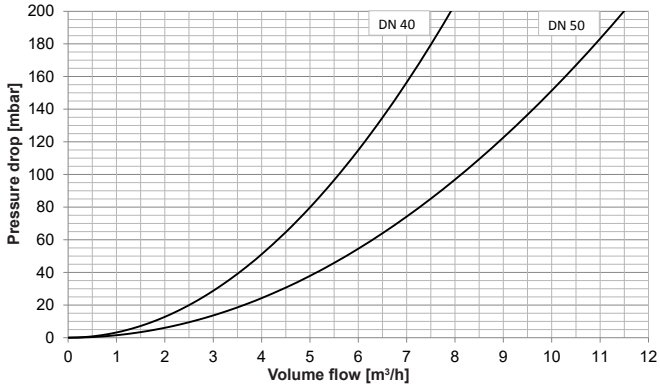

Pressure drop system wall distributor

WV-M 20-2,-3,-4,-5,-6

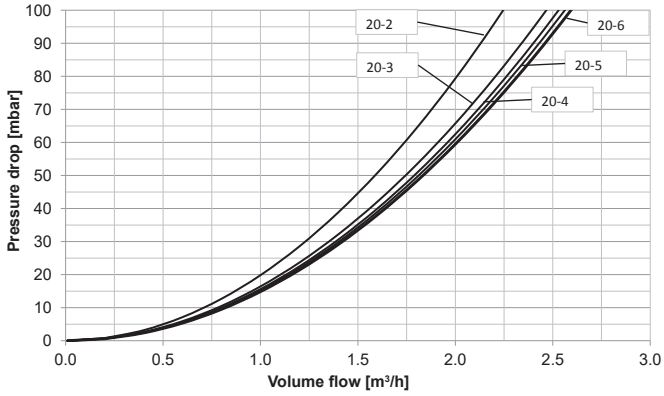

WV-M 25-2,-3,-4,-5,-6/WV-S 25-2/3

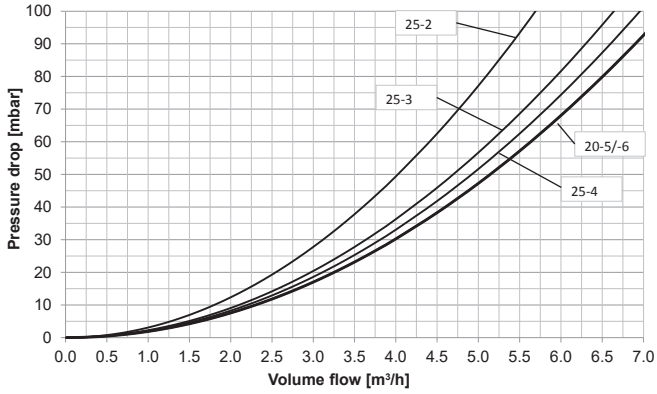

Technical data

Pressure drop system wall distributor

WV-M 32-2,-3,-4,-5,-6

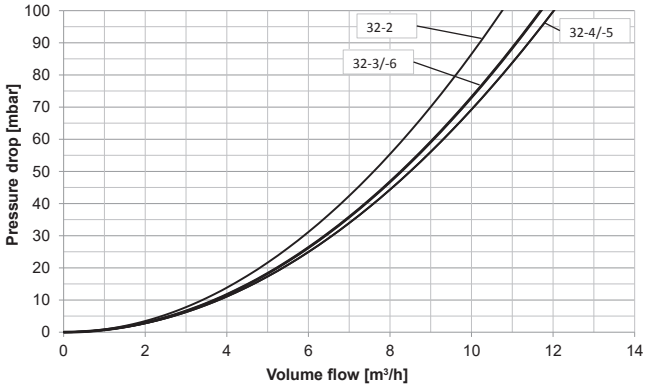

WV-M 40-2,-3,-4

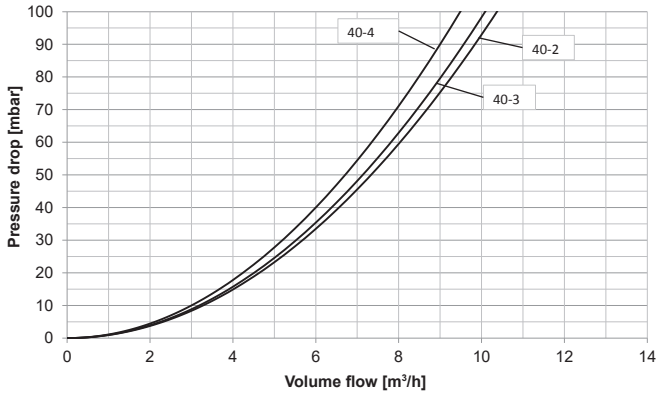

WV-M 50-2,-3

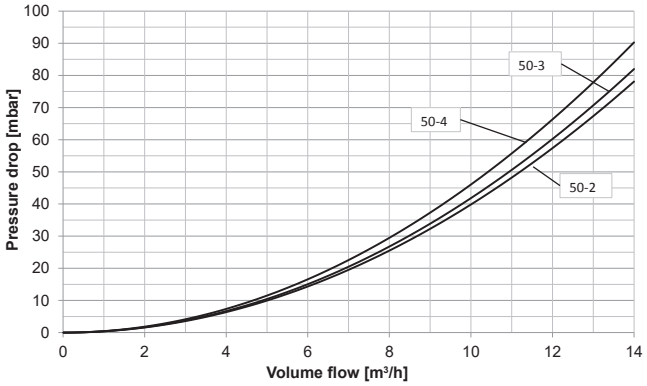

Pressure drop steel pressure distributor

SWV 25-2, -3

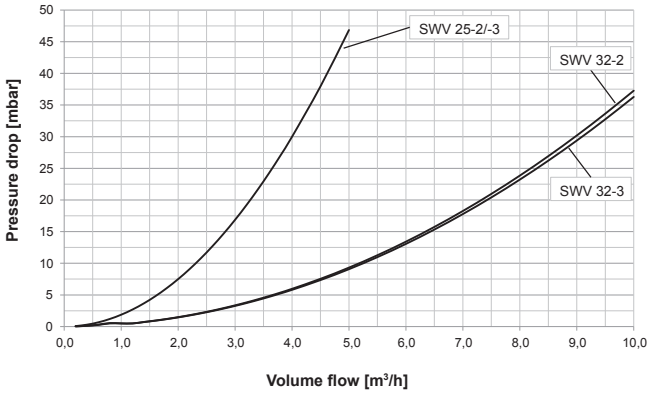

Dimensions

Loading group LG25-2 Compact

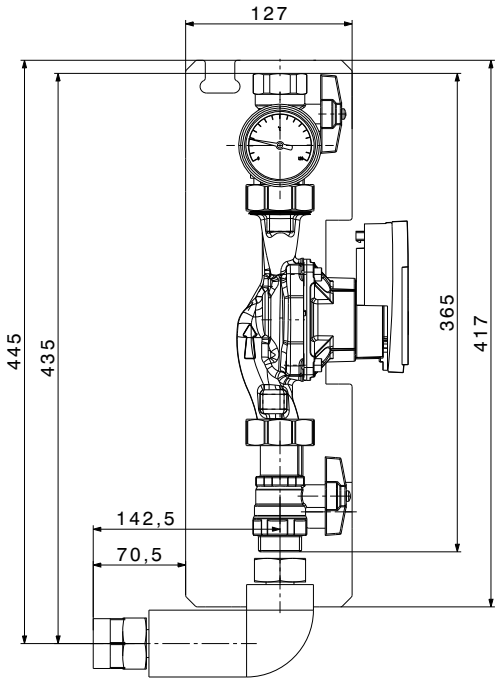

Example loading group LG25-2 Compact installed at calorifier

Side view

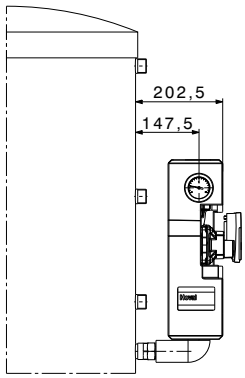

View from above

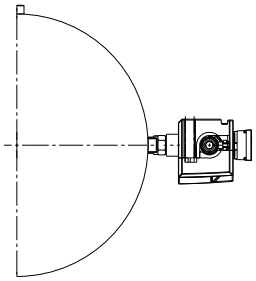

Dimensions

System wall distributor WV and heating armature groups for boiler or wall installation
with heating armature group HA or charging group LG

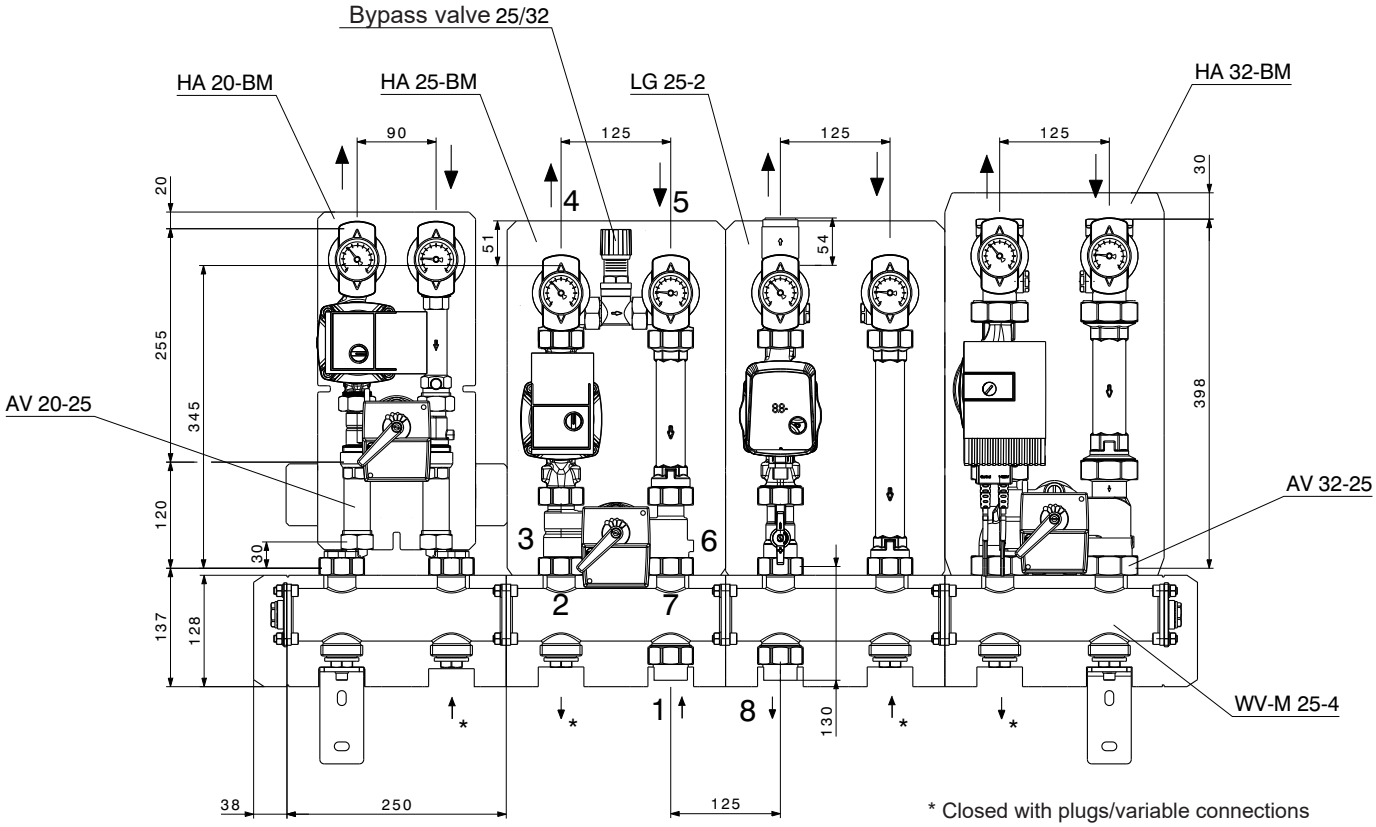

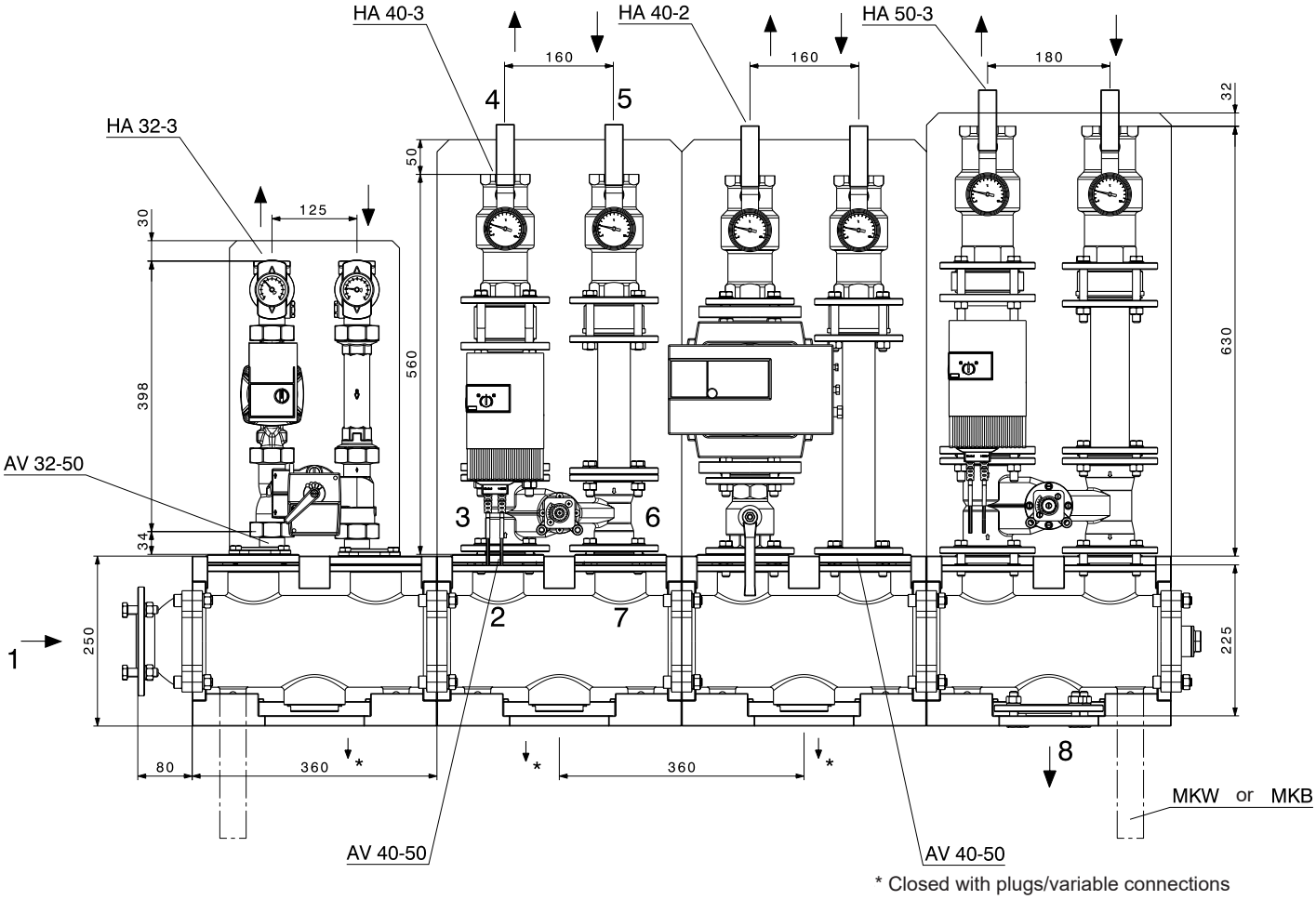

Dimensions

Steel pressure distributor SWV and heating armature groups for boiler or wall installation
with heating armature group HA or charging group LG

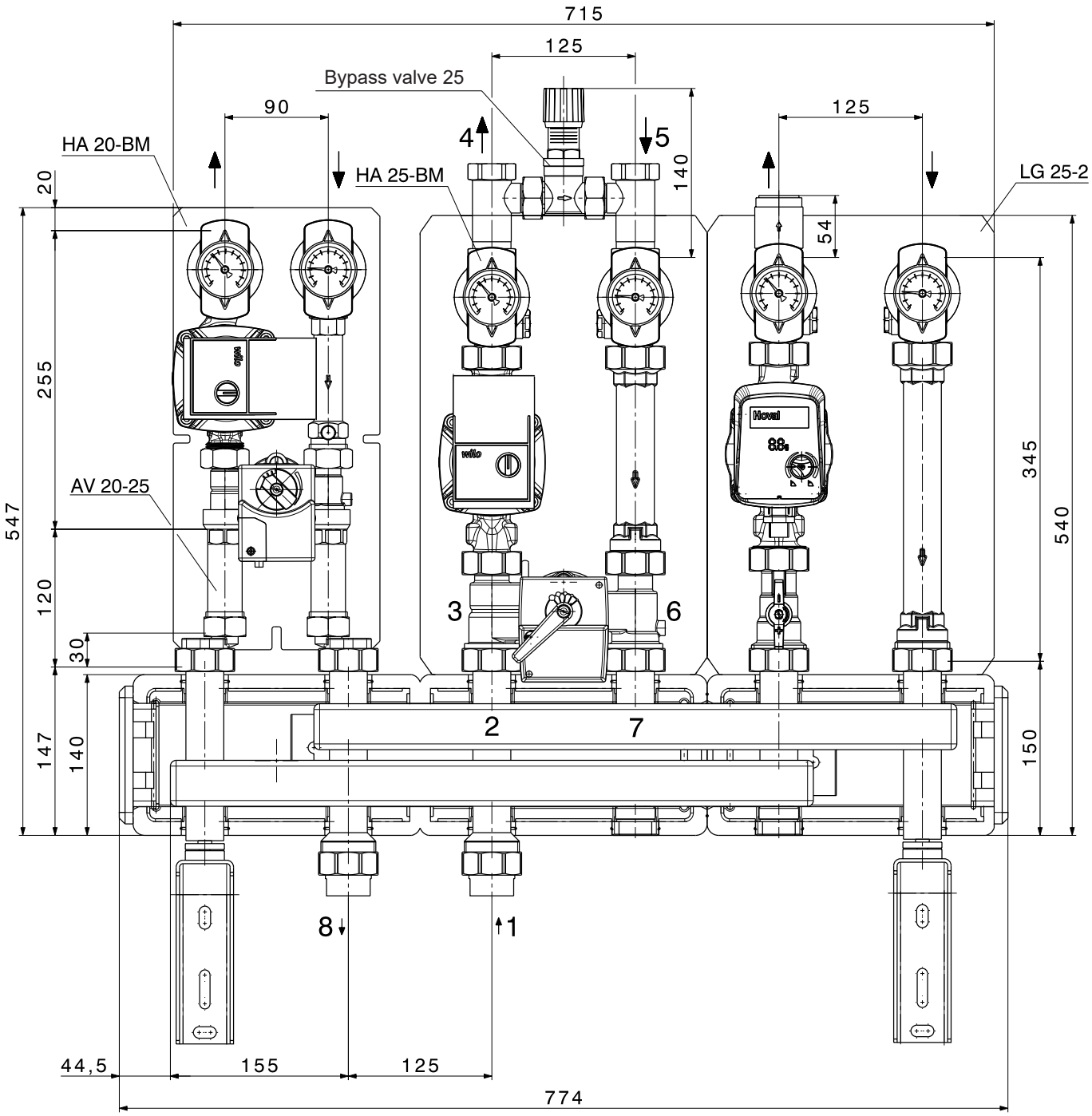

Dimensions

Heating armature groups

Type	Notation	Max. pressure [bar]	Max. temp. [°C]	kvs value [m³/h]	Dimension between centre lines [mm]	Installation height without insulation [mm]	Installation width including insulation [mm]	Height of insulation [mm]	Primary 3 flow - 6 return	Secondary 4 flow - 5 return	Overall pump dimensions [connection x mm]
LG/HA 20-2	Loading group to calorifier or heating circuit without mixer	6	110	4.7	90	255	180	385	G 1″	Rp ¾″	1″ x 130
LG/HA 25-2				7.2	125	340	250	383	G 1½″	Rp 1″	1½″ x 180
LG/HA 32-2				15.1	125	400	250	441	G 2″	Rp 1¼″	2″ x 180
HA 40-2				28.3	160	560	320	610	DN 40/PN 6	Rp 1½″	DN 40/PN 6 x 250
HA 50-2				31.2	180	630	360	660	DN 50/PN 6	Rp 2″	DN 50/PN 6 x 280
HA 20-3B...	Heating circuit with mixer	6		3.7	90	255	180	385	G 1″	Rp ¾″	1″ x 130
HA 25-3B...				6.0	125	340	250	383	G 1½″	Rp 1″	1½″ x 180
HA 32-3B...				10.1	125	400	250	441	G 2″	Rp 1¼″	2″ x 180
HA 40-3B...				17.7	160	560	320	610	DN 40/PN 6	Rp 1½″	DN 40/PN 6 x 250
HA 50-3B...				25.7	180	630	360	660	DN 50/PN 6	Rp 2″	DN 50/PN 6 x 280

Heating wall distributors

Type	Notation	Max. pressure [bar]	Max. temp. [°C]	kvs value [m³/h]	Dimension betw. centre lines [mm]	Installation height without insulation [mm]	Installation width including insulation [mm]	Height of insulation [mm]	Primary 1 flow - 8 return	Secondary 2 flow - 7 return
WV-M 20-2	Heating wall distributor	6	110	7.1	90	80	440	85	Rp ¾″	G 1″
WV-M 20-3				7.8			620			
WV-M 25-2				16.0	125	128	625	137	Rp 1″	G 1½″
WV-M 25-3				21.0			875			
WV-M 32-2				34.0	125	156	625	156	Rp 1¼″	G 2″
WV-M 32-3				37.0			875			
WV-M 40-2				32.8	160	179	740	190	DN 50/PN 6	DN 40/PN 6
WV-M 40-3				31.9			1060			
WV-M 50-2				50.1	180	225	840	220	DN 65/PN 6	DN 50/PN 6

Steel pressure distributors

Type	Notation	Max. pressure [bar]	Max. temp. [°C]	kvs value [m³/h]	Dimension betw. centre lines [mm]	Installation height without insulation [mm]	Installation width including insulation [mm]	Height of insulation [mm]	Primary 1 flow - 8 return	Secondary 2 flow - 7 return
SWV 25-2	Heating wall distributor	6	110	23.1	125	175	524	140	Rp 1″	G 1½″
SWV 25-3							774			
SWV 32-2				51.8		215	524	184	Rp 1¼″	G 2″
SWV 32-3				52.5			774			

Description

Hoval TransShare

- Freely configurable, flexible heating distributor in a fully welded configuration, mounted without vibration on a stand frame.
- The type of connection to the heat generator can be freely selected prior to production and is either on the left or right facing up.
- The heating distributor design can include a controller and an electric control panel. The TopTronic® E controller and all electrical field devices (drive and sensor) are then wired and ready to connect.
- For cold applications below the dew point, we offer the TransShare cold distributor with the appropriate valves, double corrosion protection coating and cold insulation.
- The system is designed and manufactured in line with the generally recognised codes of practice and is certified according to ISO 9001.
- Various hydraulic variants are possible. E.g.
  - with domestic water heating in the buffer storage principle
  - Set-up with several mixers and/or direct heating circuits
  - Set-up with two return flow collectors (high temperature and low temperature)
- Setting up with two return collectors is to be recommended if there is a high or medium-temperature heating circuit and a low-temperature heating circuit. The lower return temperature leads to higher efficiency levels in condensing boilers and a greater heat energy content in the buffer storage tank. Planning of the TransShare heating distributor is always carried out in relation to the building, and is adapted to the corresponding output values, temperatures and flow rates.
- Complete preassembly shortens installation times and minimises the amount of work involved.
- Thermal insulation in EPP or mineral wool with galvanised sheet steel.
- 3D-CAD drawing on request

TransShare with thermal insulation made of mineral wool and jacket made of galvanised sheet steel

TransShare with EPP thermal insulation

Nominal pressures up to PN 16 and maximum temperatures up to 110 °C are possible

Power values/sizes can be implemented:

Distributor	DN 32-500
Heating circuits	DN 20-250 realisable
Supply	100 - 1000 kW [1,2)]
Building system heating	100 - 1000 kW [1,2)]
Building system domestic water heating	20 - 1000 kW [1,2)]

[1)] Depends on the temperature programme
[2)] Depends on the valve and heat exchanger used

Further information and prices
on request

Description

Thread

Through valve YVG48..
Size DN 15-40, PN 16, 130 °C

- Valve body made from cast iron with threaded connection, incl. seals and screw connections
- Use as control or safety shut-off valve
- DN 15..40
  Kvs value: 2.5..25
  Nominal stroke: 5.5 mm

Suitable motor drives SSC319, SAS31.00, SAS31.03, SAS61.03

Through valve VVG41.50
Size DN 50, PN 16, 130 °C

- Valve body made from gunmetal with threaded connection, incl. seals and screw connections
- Use as control or safety shut-off valve
- DN 50
  Kvs value: 40
  Nominal stroke: 20 mm

Suitable motor drives SAX319.00, SAX319.03, SAX619.03

Zone valve VC4613
Size DN 15-25, 95 °C

- Through valve with gunmetal valve body with female thread and motor-based drive with 1-wire control.
- Operating voltage 230V/50Hz
- 1 built-in volt-free limit switch with 1 changeover contact max. 6 A

Flange

Through valve VVF22..
Size DN 25-100, PN 6, 130 °C

- Valve body made from grey cast iron with flange connection incl. counter flanges, screws and seals
- Use as control or safety shut-off valve
- DN 25..80
  Kvs value: 6.3..100
  Nominal stroke: 20 mm
- DN 100
  Kvs value: 160
  Nominal stroke: 40 mm

Suitable motor drives SAX319.00, SAX319.03, SKC32.60, SAX619.03, SKC60

Part No.

Notice
Through valves do not become three-way valves by removing the dummy flange!

Through valves PN 16, 130 °C, thread — Part No.

Through valve YVG48..
DN 15-40, PN 16, 130 °C
- Valve body made from cast iron with threaded connection, incl. seals and screw connections
- Use as control or safety shut-off valve
- Nominal stroke: 5.5 mm

DN	Connection Valve	Connection Fitting	kvs	V̇ [m³/h] at ΔP 120 mbar	Sv	Part No.
15	G 1″	Rp ½″	2.5	0.87	>50	6045 733
15	G 1″	Rp ½″	4.0	1.39	>50	6045 734
20	G 1¼″	Rp ¾″	6.3	2.18	>50	6045 735
25	G 1½″	Rp 1″	10	3.46	>50	6045 736
32	G 2″	Rp 1¼″	16	5.54	>50	6045 737
40	G 2¼″	Rp 1½″	25	8.66	>50	6045 738

Suitable motor drives

Type	Voltage	Control signal	Actuator run time	
SSC319	230 V / 50/60 Hz	3-point	150 s	245 236
SAS31.00	230 V / 50/60 Hz	3-point	120 s	2064 157
SAS31.03	230 V / 50/60 Hz	3-point	30 s	2064 158
SAS61.03	AC 24 V / DC 24 V	0...10 V	30 s	2064 161

Notice
The SAS61.03 motor drive can not be supplied with voltage by the TopTronic® E. Provide a separate 24 V supply.

kvs = nominal flow rate of water (5…30 °C) across the fully opened valve (H100) at a differential pressure of 1 bar
Sv = setting ratio kvs / kvr
ΔPmax. = maximum permitted pressure difference across the valve
kvr = minimum kv value at which the characteristic tolerance is still maintained at a differential pressure of 100 kPa (1 bar)

Selection table valve/motor drive

DN	SSC319	SAS31.00 SAS31.03 SAS61.03
	ΔPmax. [mbar]	
15	1000	4000
20	1000	3500
25	1000	2000
32	625	1100
40	313	600

Part No.

Notice
Through valves do not become three-way valves by removing the dummy flange!

Part No.

Through valve VVG41.50
DN 15-50, PN 16, 120 °C
- Valve body made from gunmetal with threaded connection, incl. seals and screw connections
- Use as control or safety shut-off valve
- Nominal stroke: 20 mm

DN	Connection Valve	Connection Fitting	kvs	V̇ [m³/h] at ΔP 120 mbar	Sv	Part No.
50	G 2¾″	Rp 2″	40	13.86	>100	6045 739

kvs = nominal flow rate of water (5…30 °C) across the fully opened valve (H100) at a differential pressure of 1 bar
Sv = setting ratio kvs / kvr
ΔPmax. = maximum permitted pressure difference across the valve
kvr = minimum kv value at which the characteristic tolerance is still maintained at a differential pressure of 100 kPa (1 bar)

Suitable motor drives

Type	Voltage	Control signal	Actuator run time	
SAX319.00	230 V / 50/60 Hz	3-point	120 s	2048 444
SAX319.03	230 V / 50/60 Hz	3-point	30 s	2048 445
SAX619.03	AC 24 V / DC 24 V	0...10 V	30 s	2048 446

Notice
The SAX619.03 motor drive can not be supplied with voltage by the TopTronic® E. Provide a separate 24 V supply.

Selection table valve/motor drive

DN	SAX319.00	SAX319.03	SAX619.03
	ΔPmax. [mbar]		
50	1750	1750	1750

Zone valves

Zone valve VC4613
DN 15-25, 95 °C
- Through valve with gunmetal valve body with female thread and motor-based drive with 1-wire control
- Operating voltage 230V/50Hz
- 1 built-in volt-free limit switch with 1 changeover contact max. 6 A
- Max. operating pressure 4 bar, opens in 7.2 s

DN	Screw connection	kvs [1)]	
15	Rp ½″	3.0	2012 049
20	Rp ¾″	5.0	2012 050
25	Rp 1″	6.0	2012 051

[1)] Flow rate in m³/h with a pressure drop of 1 bar.

Part No.

Notice
Through valves do not become three-way valves by removing the dummy flange!

Through valves PN 6, 130 °C, flange — Part No.

Through valve VVF22..
DN 25-100, PN 6, 130 °C

- Valve body made from grey cast iron with flange connection, incl. counter flanges, screws and seals
- Use as control or safety shut-off valve
- DN 25..80 nominal stroke: 20 mm
- DN 100 nominal stroke: 40 mm

DN	Connection Valve	Connection Flange	kvs	V̇ [m³/h] at ΔP 120 mbar	Sv	Part No.
25	FL	AE	6.3	2.18	>50	6045 741
25	FL	AE	10	3.46	>50	6045 743
40	FL	AE	16	5.54	>100	6045 744
40	FL	AE	25	8.66	>100	6045 745
50	FL	AE	40	13.66	>100	6045 746
65	FL	AE	63	21.82	>100	6045 747
80	FL	AE	100	34.64	>100	6045 748
100	FL	AE	160	55.43	>100	6045 749

Suitable motor drives

Type	Voltage	Control signal	Actuator run time	Part No.
SAX319.00	230 V / 50/60 Hz	3-point	120 s	2048 444
SKC32.60	230 V / 50/60 Hz	3-point	120 s	2048 451
SAX319.03	230 V / 50/60 Hz	3-point	30 s	2048 445
SAX619.03	AC 24 V / DC 24 V	0...10 V	30 s	2048 446
SKC60	AC 24 V / DC 24 V	0...10 V	120/20 s	2048 453

Notice
The SAX619.03 and SKC60 motor drive can not be supplied with voltage by the TopTronic® E. Provide a separate 24 V supply.

kvs = nominal flow rate of water (5…30 °C) across the fully opened valve (H100) at a differential pressure of 1 bar
Sv = setting ratio kvs / kvr
ΔPmax. = maximum permitted pressure difference across the valve
FL = Flange type 21 form B
AE = Weld-on end
kvr = minimum kv value at which the characteristic tolerance is still maintained at a differential pressure of 100 kPa (1 bar)

Selection table valve/motor drive

DN	SAX319.00 SAX619.03	SAX319.03	SKC32.60 SKC60
	ΔPmax. [mbar]		
25	3000	3000	-
40	3000	3000	-
50	3000	3000	-
65	1500	1500	-
80	750	750	-
100	-	-	2500

Dimensions

Through valve YVG48..
DN 15-40, PN 16, 130 °C

- Valve body made from cast iron with threaded connection, incl. seals and screw connections
- Use as control or safety shut-off valve
- DN 15..40
- Kvs value: 2.5..25
- Nominal stroke: 5.5 mm
- Can be fitted with motor-driven actuators SSC319 and SAS..
- Max. operating temperature 130 °C

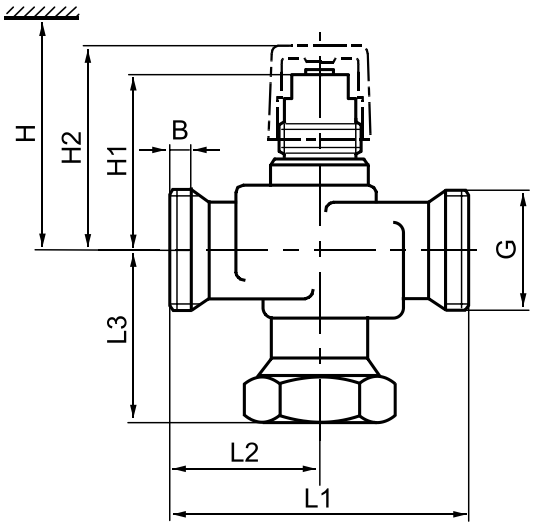

DN	B mm	G Inches	L1 mm	L2 mm	L3 mm	H1 mm	H2 mm	H SAS..	kg
15	8.5	G 1 B	100	50	58	49	59	> 381	0.67
15	8.5	G 1 B	100	50	58	53	63	> 381	0.77
20	9	G 1¼ B	100	50	59	68	78	> 396	1.0
25	11	G 1½ B	105	52.5	62.5	71	81	> 399	1.48
32	11	G 2 B	130	52.5	63.5	77.5	87.5	> 406	1.95
40	11	G 2¼ B	140	65	76	80.5	90.5	> 409	2.75

DN = nominal diameter
H = overall height of the actuator plus minimum distance to the wall or ceiling for installation, connection, operation, maintenance etc.
H1 = Installation height from the pipe centre for installation of the actuator (top edge)
H2 = from pipe centre to top edge of manual adjustment knob, valve in “Closed” position

Fittings

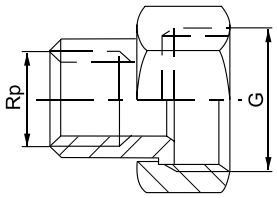

DN	G Inches	Rp Inches
YVG48.15	G 1	Rp ½
YVG48.20	G 1¼	Rp ¾
YVG48.25	G 1½	Rp 1
YVG48.32	G2	Rp 1¼
YVG48.40	G 2¼	Rp 1½

- Valve side with cylindrical thread according to ISO 228-1
- Tube side with cylindrical thread according to ISO 7-1
- Fittings up to 100 °C media temperature

Technical data

Flow rate diagram

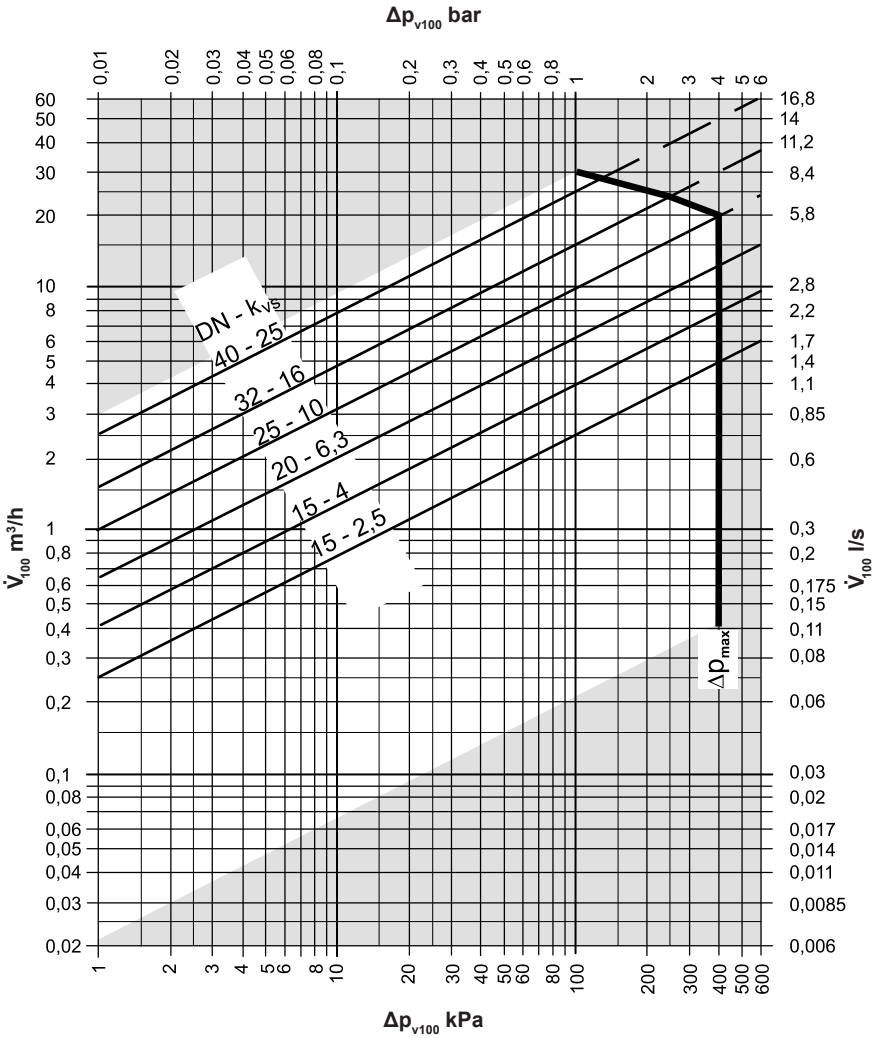

Valve characteristic curve

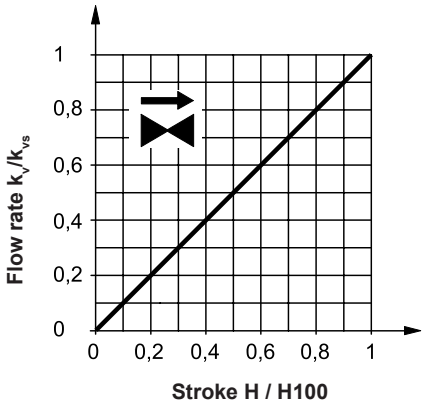

Passage:
0... 100 % linear according to VDI /VDE2173

Valve section

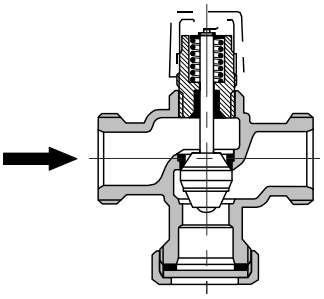

Δp_{max} = maximum permitted pressure difference across the control path of the valve for the entire setting range of the valve-actuator unit
Δp_{v100} = differential pressure across the fully opened valve and above the control path at a flow rate V100
V_{100} = flow rate through the fully opened valve (H_{100})
100 kPa = 1 bar ≈ 10 mWC
1 m³/h = 0.278 l/s water of 20 °C

- Guided parabolic plug, firmly connected with the valve tappet
- The seat is pressed into the casing together with special sealing material.

Notice
Through valves do not become three-way valves by removing the dummy flange!

Dimensions

Through valves VVG41.50
DN 15-50, PN 16, 120 °C

- Valve body made from gunmetal with threaded connection, incl. seals and screw connections
- Use as control or safety shut-off valve
- DN 50
- Kvs value: 40 m^3/h
- Can be fitted with motor-driven actuators SAX..
- Max. operating temperature 130 °C

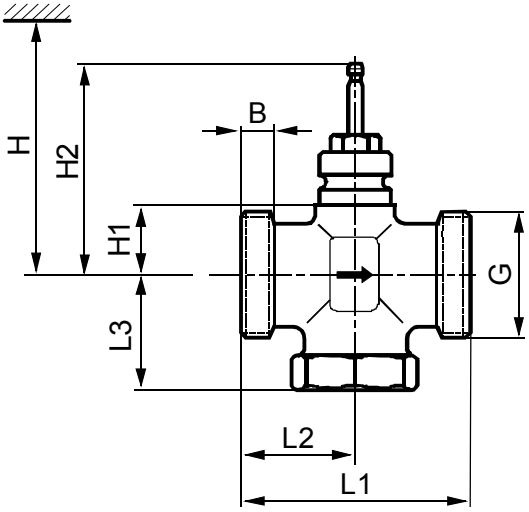

DN	B mm	G Inches	L1 mm	L2 mm	L3 mm	H1 mm	H2 mm	H SAX..
50	16	G 2¾″	150	75	83	46	142.5	>488

DN = nominal diameter
H = overall height of the actuator plus minimum distance to the wall or ceiling for installation, connection, operation, maintenance etc.
H1 = Installation height from the pipe centre for installation of the actuator (top edge)
H2 = Valve in “Closed” position means that the tappet is completely extended

Fittings

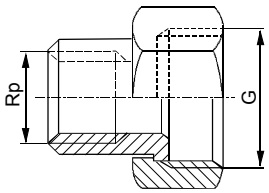

DN	G Inches	Rp Inches
VVG41.50	G 1	Rp ½

- Valve side with cylindrical thread according to ISO 228-1
- Tube side with cylindrical thread according to ISO 7-1
- Fittings up to 100 °C media temperature

Technical data

Flow rate diagram

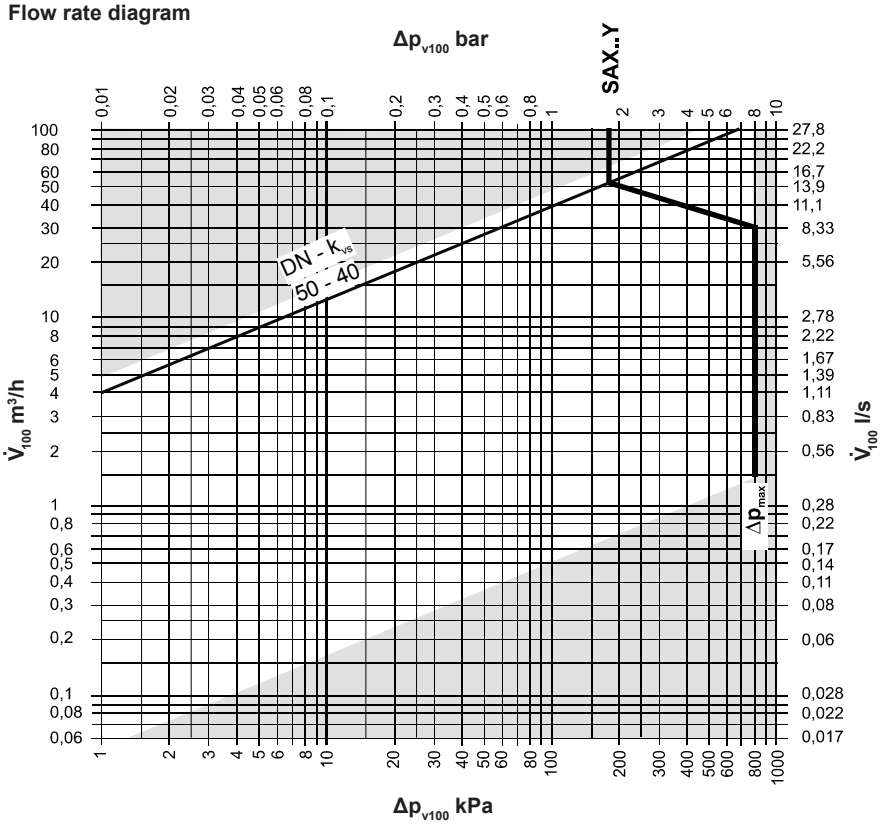

Valve characteristic curve

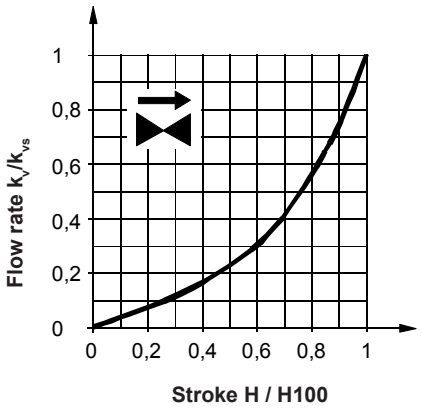

Passage:

0...30 %	=	linear
30...100 %	=	equal percentage n_{ep} = 3 according to VDI / VDE 2173

Valve section

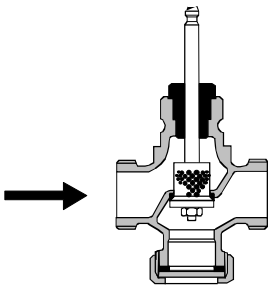

Δp_{max}	=	maximum permitted pressure difference across the valve for the entire setting range of the valve-actuator unit
Δp_{v100}	=	differential pressure across the fully opened valve and above the control path at flow rate V_{100}
V_{100}	=	flow rate through the fully opened valve (H_{100})
100 kPa	=	1 bar ≈ 10 mWC
1 m³/h	=	0.278 l/s water of 20 °C

Notice
Through valves do not become three-way valves by removing the dummy flange!

Dimensions

Through valve VVF22..
DN 25-100, PN 6, 130 °C

- Valve body made from grey cast iron with flange connection incl. counter flanges, screws and seals
- DN 25…100
- Kvs value: 6.3…160 m³/h
- Flange type 21, flange form B
- Can be fitted with motor-driven actuators SAX.. or electrohydraulic actuators SKC..
- Max. operating temperature 130 °C

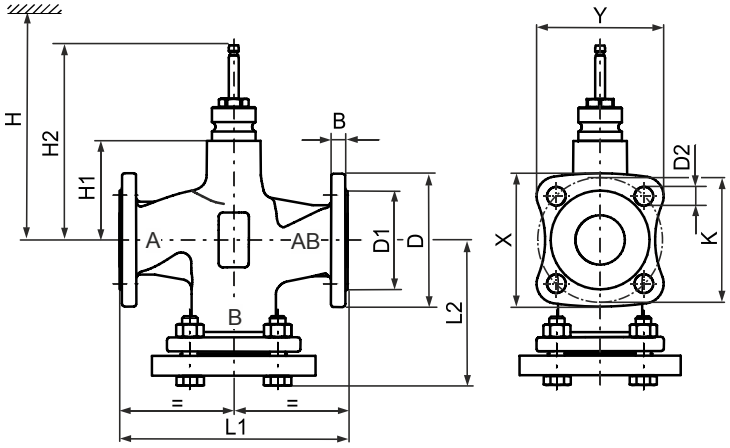

DN	kg	B	Ø D	Ø D1	Ø D2	L1	L2	Ø K	x	y	H1	H2	H	
													SAX..	SKC..
25	4.1	11	100	58	11 (4x)	150	99	75	82	78	37	133.5	479	-
40	6.5	13	130	78	14 (4x)	180	116	100	106	101	37	133.5	479	-
50	8	14	140	88	14 (4x)	200	128	110	114	108	50	146.5	492	-
65	11.9	14	160	108	14 (4x)	240	142.5	130	129	122	75	171.55	517	-
80	17.1	16	190	124	19 (4x)	260	157	150	154	146	75	171.55	517	-
100	24.2	16	210	144	19 (4x)	300	179	170	170	160	110	226.5	-	685

Technical data

Flow rate diagram

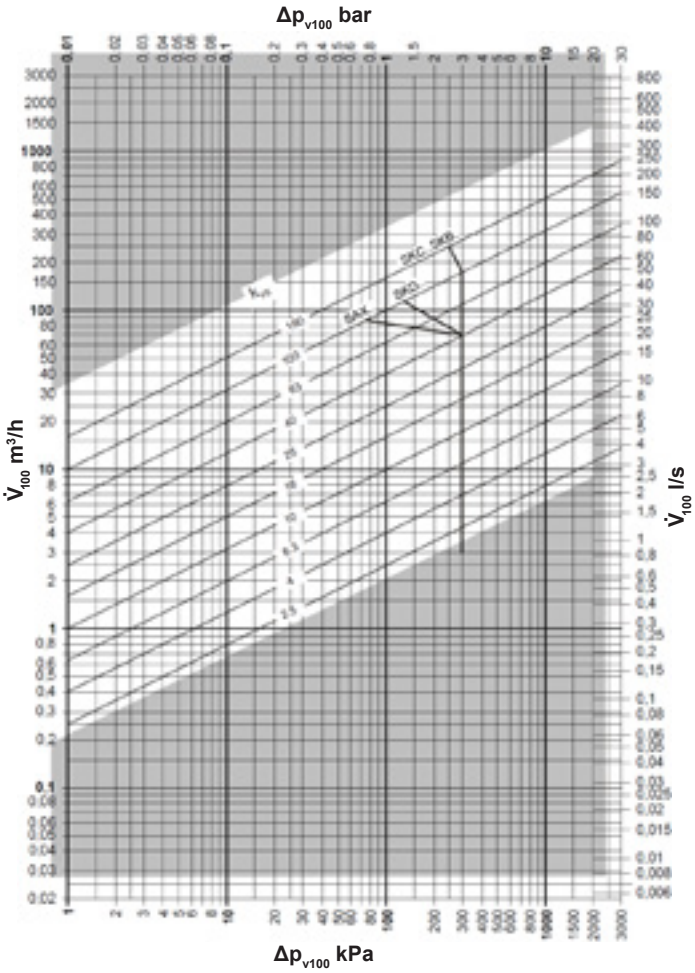

Valve characteristic curve

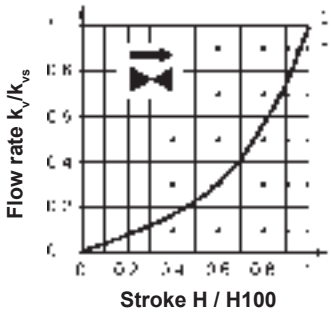

0...30 % = linear
30...100 % = equal percentage
n_{ep} = 3 according to VDI / VDE 2173

For elevated kvs values, the valve characteristic curve is optimised for a maximum flow rate k_{v100}.

Valve section

Liquids

Closing against the pressure

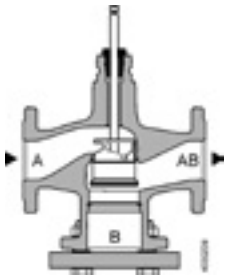

A → AB

With all drives

Description

Thread

Three-way valve YXG48..
Size DN 15-40, PN 16, 130 °C

- Valve body made from cast iron with threaded connection, incl. seals and screw connections
- For distribution, switching or mixing
- DN 15..40
  Kvs value: 2.5..25
  Nominal stroke: 5.5 mm

Suitable motor drives SSC319, SAS31.00, SAS31.03, SAS61.03

Suitable motor drives for switching VC4013, SAT31.008

Three-way valve VXG41.50
Size DN 50, PN 16, 130 °C

- Valve body made from gunmetal with threaded connection, incl. seals and screw connections
- For distribution, switching or mixing
- DN 50
  Kvs value: 40
  Nominal stroke: 20 mm

Suitable motor drives SAX319.00, SAX319.03, SAX619.03

Flange

Three-way valve VXF22..
Size DN 25-150, PN 6, 130 °C

- Valve body made from grey cast iron with flange connection incl. counter flanges, screws and seals
- For distribution, switching or mixing
- DN 25..80
  Kvs value: 6.3..100
  Nominal stroke: 20 mm
- DN 100
  Kvs value: 160
  Nominal stroke: 40 mm

Suitable motor drives SAX319.00, SAX319.03, SKC32.60, SAX619.03, SKC60

Three-way valve VXF32.150
Size DN 150, PN 10, 130 °C

- Valve body made from grey cast iron with flange connection incl. counter flanges, screws and seals
- For distribution, switching or mixing
- DN 150
  Kvs value: 400
  Nominal stroke: 40 mm

Suitable motor drive for switching SKC32.60, SKC60

Part No.

Three-way valves PN 16, 130 °C, thread — Part No.

Three-way valve YXG48..
DN 15-40, PN 16, 130 °C

- Valve body made from cast iron with threaded connection, incl. seals and screw connections
- For distribution, switching or mixing
- Nominal stroke: 5.5 mm

DN	Connection Valve	Connection Fitting	kvs	V̇ [m³/h] at ΔP 120 mbar	Sv	Part No.
15	G 1″	Rp ½″	2.5	0.87	>50	6045 750
15	G 1″	Rp ½″	4	1.39	>50	6045 751
20	G 1¼″	Rp ¾″	6.3	2.18	>50	6045 753
25	G 1½″	Rp 1″	10	3.46	>50	6045 754
32	G 2″	Rp 1¼″	16	5.54	>50	6045 755
40	G 2¼″	Rp 1½″	25	8.66	>50	6045 756

Suitable motor drives

Type	Voltage	Control signal	Actuator run time	
SSC319	230 V / 50/60 Hz	3-point	150 s	245 236
SAS31.00	230 V / 50/60 Hz	3-point	120 s	2064 157
SAS31.03	230 V / 50/60 Hz	3-point	30 s	2064 158
SAS61.03	AC 24 V / DC 24 V	0...10 V	30 s	2064 161

Notice
The SAS61.03 motor drive can not be supplied with voltage by the TopTronic® E. Provide a separate 24 V supply.

kvs = nominal flow rate of water (5…30 °C) across the fully opened valve (H100) at a differential pressure of 1 bar
Sv = setting ratio kvs / kvr
ΔPmax. = maximum permitted pressure difference across the valve
kvr = minimum kv value at which the characteristic tolerance is still maintained at a differential pressure of 100 kPa (1 bar)

Selection table valve/motor drive

DN	SSC319	SAS31.00 SAS31.03 SAS61.03
	ΔPmax. [mbar]	
15	1000	4000
20	1000	3500
25	1000	2000
32	625	1100
40	313	600

Part No.

kvs = nominal flow rate of water (5…30 °C) across the fully opened valve (H100) at a differential pressure of 1 bar
Sv = setting ratio kvs / kvr
ΔPmax. = maximum permitted pressure difference across the valve
kvr = minimum kv value at which the characteristic tolerance is still maintained at a differential pressure of 100 kPa (1 bar)

Three-way valves PN 16, 130 °C, thread — Part No.

Three-way valve VXG41.50
DN 15-50, PN 16, 120 °C

- Valve body made from gunmetal with threaded connection, incl. seals and screw connections
- For distribution, switching or mixing
- Nominal stroke: 20 mm

DN	Connection Valve	Connection Fitting	kvs	V̇ [m³/h] at ΔP 120m bar	Sv	Part No.
50	G 2¾″	Rp 2″	40	13.86	>100	6045 757

Suitable motor drives

Type	Voltage	Control signal	Actuator run time	
SAX319.00	230 V / 50/60 Hz	3-point	120 s	2048 444
SAX319.03	230 V / 50/60 Hz	3-point	30 s	2048 445
SAX619.03	AC 24 V / DC 24 V	0...10 V	30 s	2048 446

Notice
The SAX619.03 motor drive can not be supplied with voltage by the TopTronic® E. Provide a separate 24 V supply.

Selection table valve/motor drive

DN	SAX319.00	SAX319.03	SAX619.03
	ΔPmax. [mbar]		
50	1750	1750	1750

■ **Part No.**

Three-way valves PN 6/10, 130 °C, flange — Part No.

Three-way valve VXF22..
DN 25-100, PN 6, 130 °C

- Valve body made from grey cast iron with flange connection, incl. counter flanges, screws and seals
- For distribution, switching or mixing
- DN 25..80 nominal stroke: 20 mm
- DN 100 nominal stroke: 40 mm

DN	Connection Valve	Connection Flange	kvs	V̇ [m³/h] at ΔP 120 mbar	Sv	Part No.
25	FL	AE	6.3	2.18	>50	6045 758
25	FL	AE	10	3.46	>50	6045 759
40	FL	AE	16	5.54	>100	6045 760
40	FL	AE	25	8.66	>100	6045 761
50	FL	AE	40	13.86	>100	6045 762
65	FL	AE	63	21.82	>100	6045 763
80	FL	AE	100	34.64	>100	6045 764
100	FL	AE	160	55.43	>100	6045 765

Suitable motor drives

Type	Voltage	Control signal	Actuator run time	Part No.
SAX319.00	230 V / 50/60 Hz	3-point	120 s	2048 444
SAX319.03	230 V / 50/60 Hz	3-point	30 s	2048 445
SKC32.60	230 V / 50/60 Hz	3-point	120 s	2048 451
SAX619.03	AC 24 V / DC 24 V	0...10 V	30 s	2048 446
SKC60	AC 24 V / DC 24 V	0...10 V	120/20 s	2048 453

Notice
The SAX619.03 and SKC60 motor drive can not be supplied with voltage by the TopTronic® E. Provide a separate 24 V supply.

kvs = nominal flow rate of water (5…30 °C) across the fully opened valve (H100) at a differential pressure of 1 bar
Sv = setting ratio kvs / kvr
ΔPmax. = maximum permitted pressure difference across the valve
FL = Flange type 21 form B
AE = Weld-on end
kvr = minimum kv value at which the characteristic tolerance is still maintained at a differential pressure of 100 kPa (1 bar)

Selection table valve/motor drive

DN	SAX319.00 SAX619.03	SAX319.03	SKC32.60 SKC60
	ΔPmax. [mbar]		
25	3000	3000	-
40	3000	3000	-
50	3000	3000	-
65	1500	1500	-
80	750	750	-
100	-	-	2500
150	-	-	500

Part No.

Three-way valve VXF32.150
DN 150, PN 10, 130 °C

- Valve body made from grey cast iron with flange connection, incl. counter flanges, screws and seals
- For distribution, switching or mixing
- DN 150 nominal stroke: 40 mm

DN	Connection Valve	Connection Flange	kvs	V̇ [m³/h] at ΔP 120 mbar	Sv	Part No.
150	FL	AE	400	138.56	>100	6045 766

Suitable motor drives

Type	Voltage	Control signal	Actuator run time	
SKC32.60	230 V / 50/60 Hz	3-point	120 s	2048 451
SKC60	AC 24 V / DC 24 V	0...10 V	120/20 s	2048 453

Notice
The SKC60 motor drive can not be supplied with voltage by the TopTronic® E. Provide a separate 24 V supply.

kvs = nominal flow rate of water (5…30 °C) across the fully opened valve (H100) at a differential pressure of 1 bar
Sv = setting ratio kvs / kvr
ΔPmax. = maximum permitted pressure difference across the valve
FL = Flange type 21 form B
AE = Weld-on end
kvr = minimum kv value at which the characteristic tolerance is still maintained at a differential pressure of 100 kPa (1 bar)

Selection table valve/motor drive

DN	SAX319.00 SAX619.03	SAX319.03	SKC32.60 SKC60
	ΔPmax. [mbar]		
25	3000	3000	-
40	3000	3000	-
50	3000	3000	-
65	1500	1500	-
80	750	750	-
100	-	-	2500
150	-	-	500

Dimensions

Three-way valve YXG48…
Size DN 15-40, PN 16, 130 °C

- For distribution, switching or mixing
- Valve body made from cast iron with threaded connection, incl. seals and screw connections
- DN 15…40 Kvs 0.25...25 m³/h
- Manual adjustment via mounted rotary button
- Can be fitted with motor-driven actuators SSY319 and SAS..
- Max. operating temperature 130°C

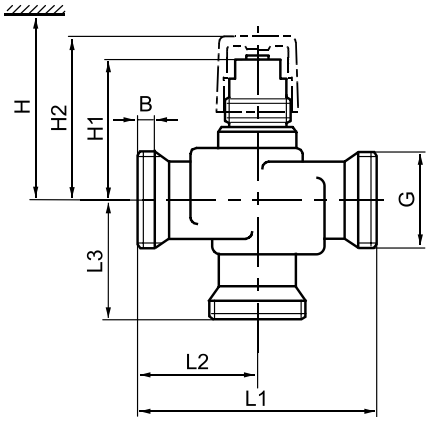

DN	B mm	G Inches	L1 mm	L2 mm	L3 mm	H1 mm	H2 mm	H SAS..	kg
15	8.5	G 1 B	100	50	50	49	59	> 381	0.67
15	8.5	G 1 B	100	50	50	53	63	> 381	0.77
20	9	G 1¼ B	100	50	50	68	78	> 396	0.90
25	11	G 1½ B	105	52.5	52.5	71	81	> 399	1.30
32	11	G 2 B	130	52.5	52.5	77.5	87.5	> 406	1.74
40	11	G 2¼ B	140	65	65	80.5	90.5	> 409	2.39

DN = nominal diameter
H = overall height of the actuator plus minimum distance to the wall or ceiling for installation, connection, operation, maintenance etc.
H1 = Installation height from the pipe centre for installation of the actuator (top edge)
H2 = from pipe centre to top edge of manual adjustment knob, valve in “Closed” position

Fittings

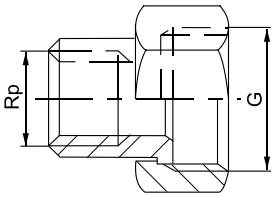

DN	G Inches	Rp Inches
YXG48..15	G 1	Rp ½
YXG48..20	G 1¼	Rp ¾
YXG48..25	G1½	Rp 1
YXG48..32	G2	Rp 1¼
YXG48..40	G 2¼	Rp 1½

- Valve side with cylindrical thread according to ISO 228-1
- Tube side with cylindrical thread according to ISO 7-1
- Fittings up to 100 °C media temperature

Technical data

Flow rate diagram

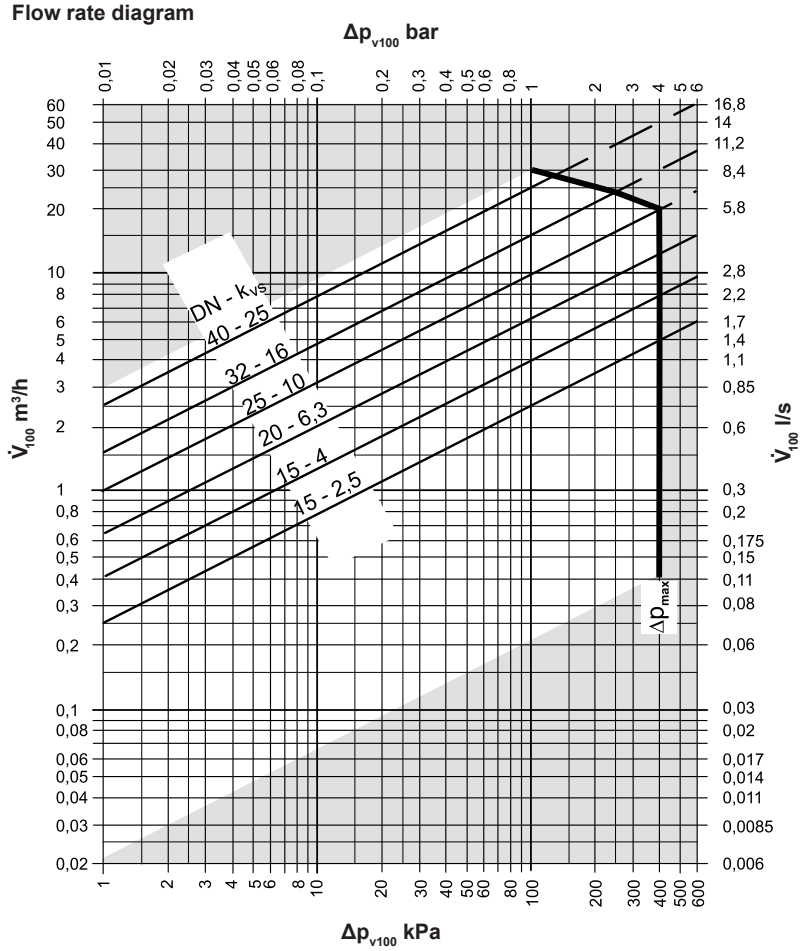

Δp_{max}	=	maximum permitted pressure difference above the control path of the valve
Δp_{v100}	=	differential pressure across the fully opened valve and above the control path (YXG44..: A - AB, B - AB) at a flow rate V100
V_{100}	=	flow rate through the fully opened valve (H100)
100 kPa	=	1 bar ≈ 10 mWC
1 m³/h	=	0.278 l/s water of 20 °C

Valve characteristic curve

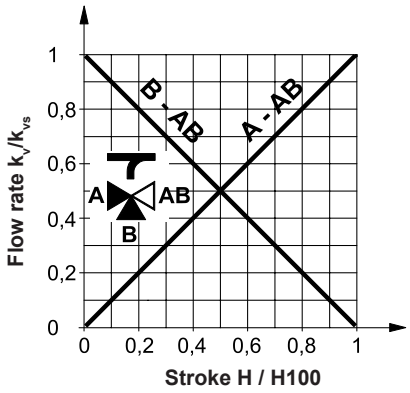

Valve characteristic curve:

Passage	=	linear according to VDI /VDE2173
Bypass	=	linear according to VDI /VDE2173
Mixing:		Flow from gate A and gate B to gate AB
Distribution:		Flow from gate AB to gate A and gate B
Gate AB	=	constant flow rate
Gate A	=	variable flow
Gate B	=	bypass (variable flow)

The three-way valve should be preferably used as mixing valve.

Valve section

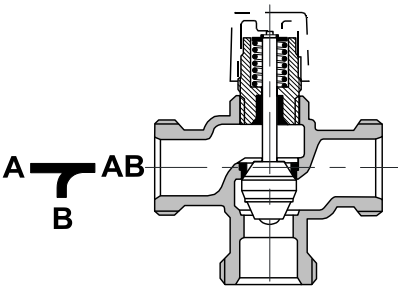

Guided parabolic plug (from DN 25), firmly connected with the valve tappet
The seat is pressed in the passage and integrated directly in the casing in the bypass. From DN 25, the seat is integrated in the casing in the passage and the seating ring is pressed in the bypass.

Dimensions

Three-way valve VXG41.50
Size DN 50, PN 16, 130 °C

- Valve body made from gunmetal with threaded connection, incl. seals and screw connections
- For distribution, switching or mixing
- DN 50
  Kvs 40 m³/h
- Can be fitted with motor-driven actuators SAX..
- Max. operating temperature 130 °C

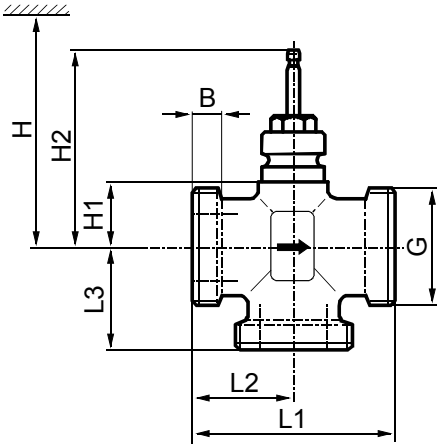

DN	B mm	G Inches	L1 mm	L2 mm	L3 mm	H1 mm	H2 mm	H SAX..	kg
50	16	G 2¾″	150	75	75	46	142.5	>488	3.90

DN = nominal diameter
H = overall height of the actuator plus minimum distance to the wall or ceiling for installation, connection, operation, maintenance etc.
H1 = Installation height from the pipe centre for installation of the actuator (top edge)
H2 = Valve in “Closed” position means that the tappet is completely extended

Fittings

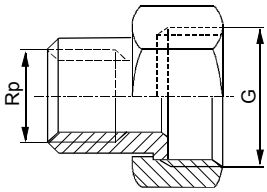

DN	G Inches	Rp Inches
VXG41.50	G 2¾	Rp 2

- Valve side with cylindrical thread according to ISO 228-1
- Tube side with cylindrical thread according to ISO 7-1
- Fittings up to 100 °C media temperature

Technical data

Flow rate diagram

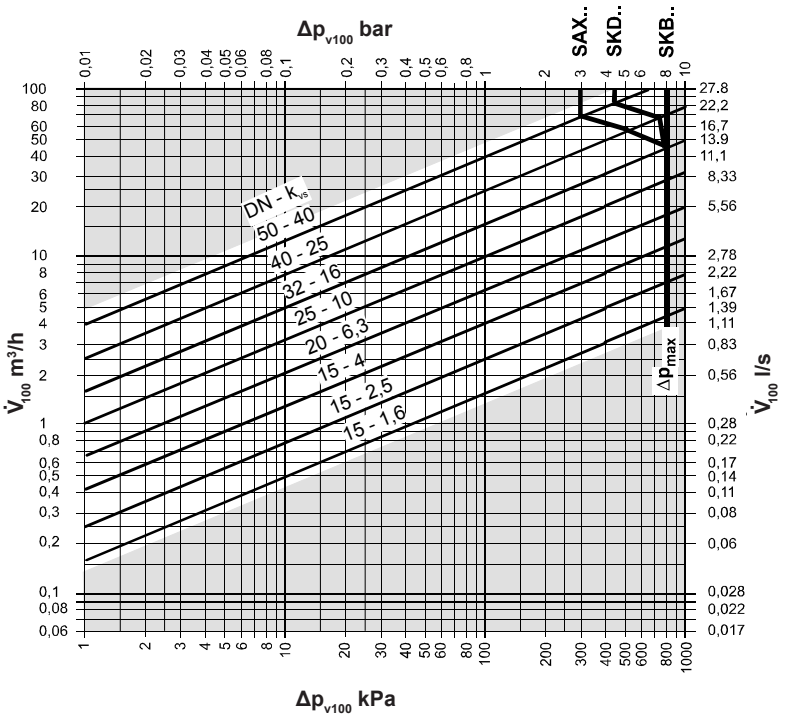

Δp_{max}	=	maximum permitted pressure difference across the valve (mixing: gates A-AB, B-AB) for the entire setting range of the valve-actuator unit
Δp_{v100}	=	differential pressure across the fully opened valve and above the control path A-AB, B-AB at flow rate V100
V_{100}	=	flow rate through the fully opened valve (H100)
100 kPa	=	1 bar ≈ 10 mWC
1 m³/h	=	0.278 l/s water of 20 °C

Valve characteristic curve

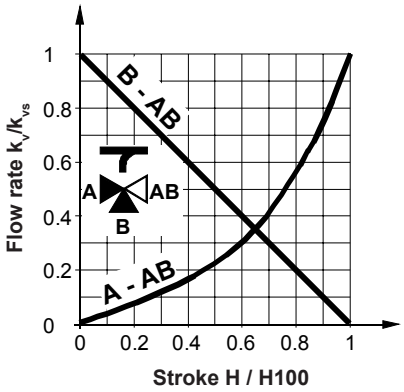

Passage

0...30 %	=	linear
30...100 %	=	equal percentage n_{ep} = 3 according to VDI / VDE 2173

Bypass

0...100 %	=	linear
Mixing		Flow from gate A and gate B to gate AB
Distribution		Flow from gate AB to gate A and gate B
Gate AB	=	constant flow rate
Gate A	=	variable flow
Gate B	=	bypass (variable flow)

The three-way valve should be preferably used as mixing valve.

Valve section

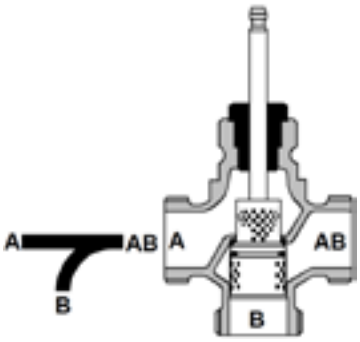

Guided perforated plug, firmly connected with the valve tappet

The seat A-AB is pressed into the casing together with special sealing material.

Dimensions

Three-way valve VXF22..
with flange connection, PN 6, 130 °C

- Valve body made from grey cast iron with flange connection incl. counter flanges, screws and seals
- DN 25…100
  Kvs 2.5…160 m³/h
- Flange type 21, flange form B
- Can be fitted with motor-driven actuators SAX.. or electrohydraulic actuators SKC..
- Max. operating temperature 130°C

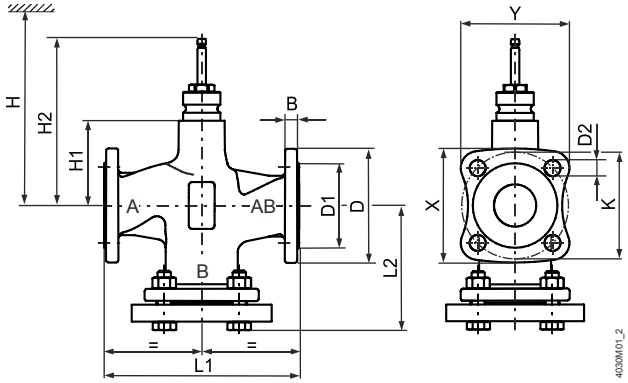

DN	kg	B	Ø D	Ø D1	Ø D2	Ø D3	L1	L2	Ø K	X	Y	H1	H2	H SAX..	H SKC..
25	3	11	100	58	11 (4x)	36	150	75	75	82	78	37	133.5	479	-
40	4.8	13	130	78	14 (4x)	52	180	90	100	106	101	37	133.5	479	-
50	6.2	14	140	88	14 (4x)	65	200	100	110	114	108	50	146.5	492	-
65	9.5	14	160	108	14 (4x)	85	240	120	130	129	122	75	171.5	517	-
80	13.1	16	190	124	19 (4x)	98	260	130	150	154	146	75	171.5	517	-
100	24.2	16	210	144	19 (4x)	116	300	150	170	170	160	110	226.5	-	685

Technical data

Flow rate diagram

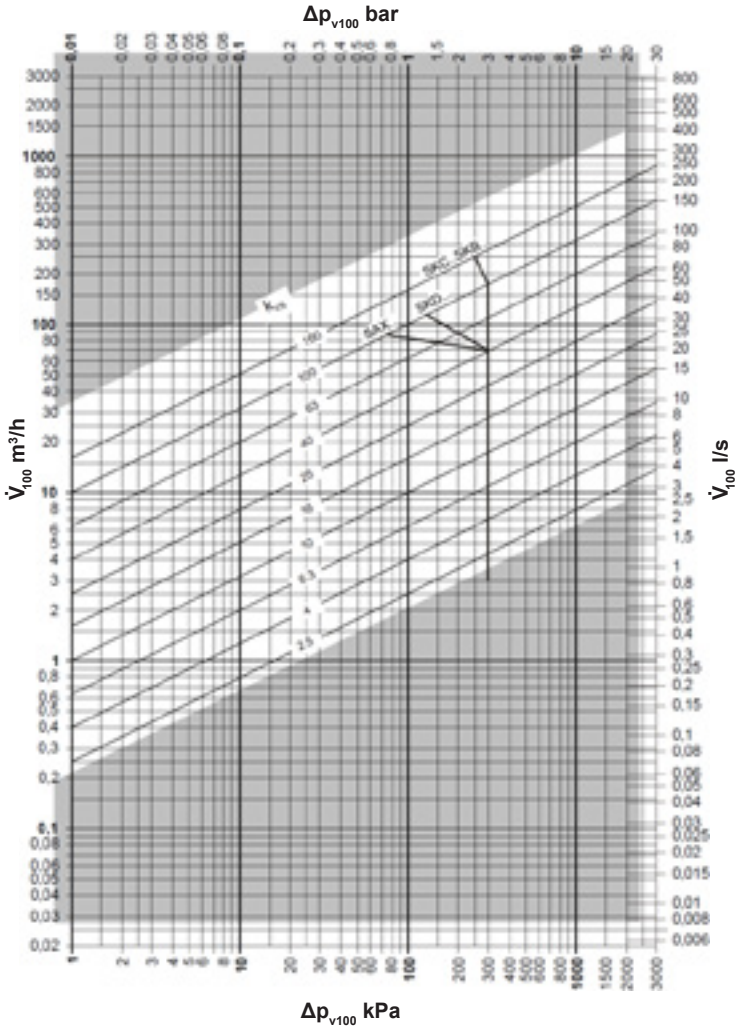

Δp_{max}	=	maximum permitted pressure difference across the valve (mixing: gates A-AB, B-AB) for the entire setting range of the valve-actuator unit
Δp_{v100}	=	differential pressure across the fully opened valve and above the control path A-AB, B-AB at flow rate V100
V_{100}	=	flow rate through the fully opened valve (H100)
100 kPa	=	1 bar ≈ 10 mWC
1 m³/h	=	0.278 l/s water of 20 °C

Valve characteristic curve

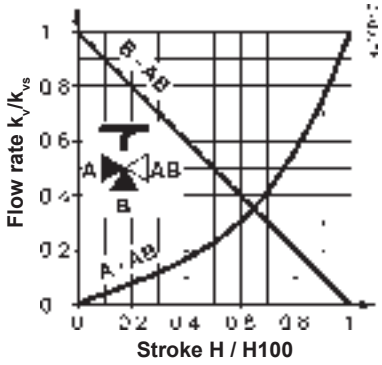

Passage A-AB

0...30 %	=	linear
30...100 %	=	equal percentage n_{ep} = 3 according to VDI / VDE 2173

For elevated kvs values, the valve characteristic curve is optimised for a maximum flow rate k_{v100}.

Bypass B-AB

0...100 %	=	linear
Gate AB	=	constant flow rate
Gate A	=	variable flow
Gate B	=	bypass (variable flow)
Mixing		Flow from gate A and gate B to gate AB
Distribution		Flow from gate AB to gate A and gate B

Valve section

Liquids

Mixing valve (preferred)

Diverting valve

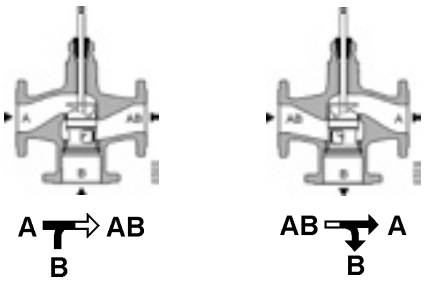

Dimensions

Three-way valve VXF32.150

- Valve body made from grey cast iron with flange connection incl. counter flanges, screws and seals
- DN 150
  Kvs 400 m^3/h
- Flange type 21, flange form B
- Can be fitted with motor-driven actuators SKC..
- Max. operating temperature 130 °C

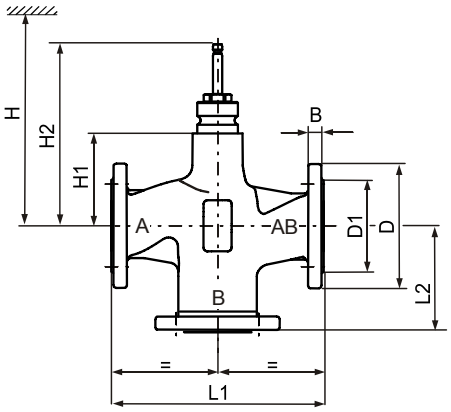

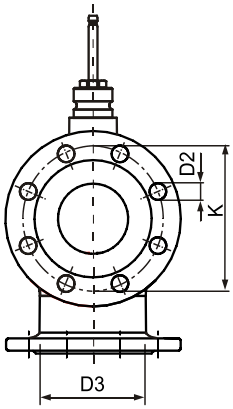

DN	kg	B	Ø D	Ø D1	Ø D2	Ø D3	L1	L2	X	Y	Ø K	H1	H2	H SKC..
150	62.1	17	284	211	23 (8x)	174	480	240	-	-	240	150.5	267	726

Technical data

Flow rate diagram

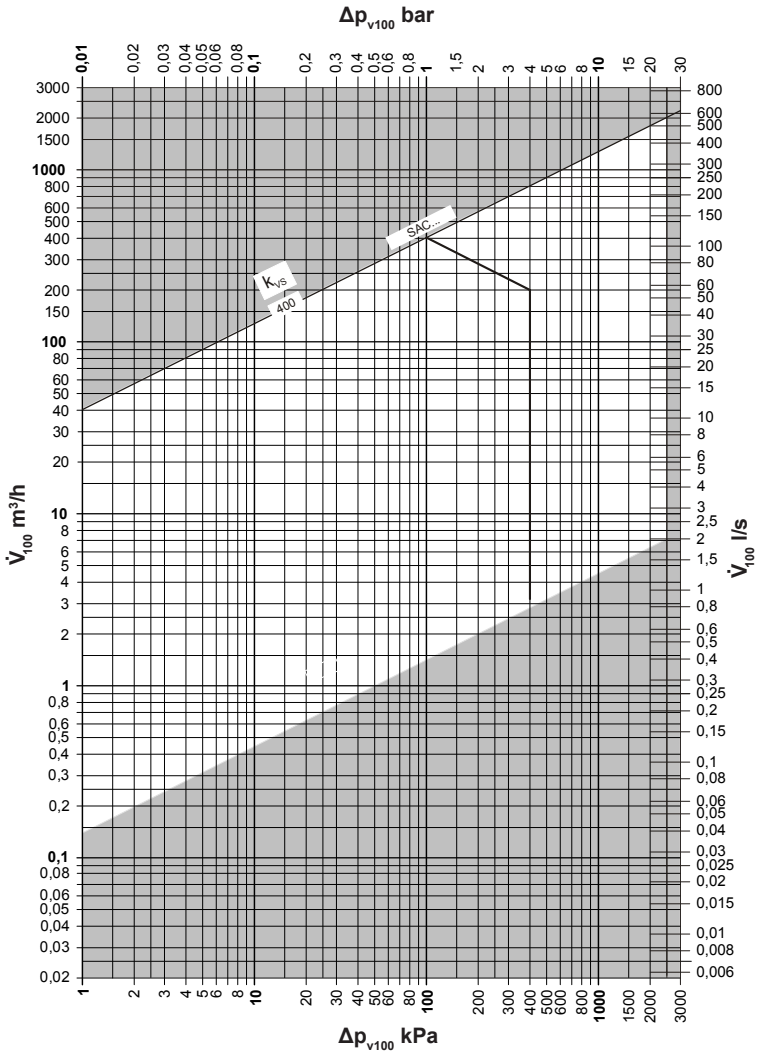

Δp_{max}	=	maximum permitted pressure difference across the valve (mixing: gates A-AB, B-AB) for the entire setting range of the valve-actuator unit
Δp_{v100}	=	differential pressure across the fully opened valve and above the control path A-AB, B-AB at flow rate V100
V_{100}	=	flow rate through the fully opened valve (H100)
100 kPa	=	1 bar ≈ 10 mWC
1 m³/h	=	0.278 l/s water of 20 °C

Valve characteristic curve

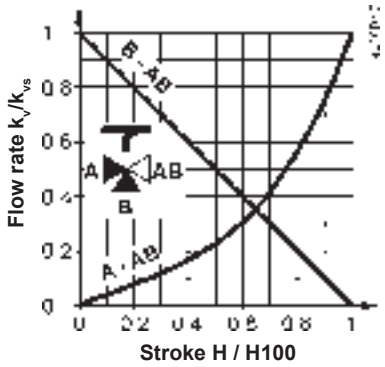

Passage A-AB

0...30 %	=	linear
30...100 %	=	equal percentage n_{ep} = 3 according to VDI / VDE 2173

For elevated kvs values, the valve characteristic curve is optimised for a maximum flow rate k_{v100}.

Bypass B-AB

0...100 %	=	linear
Gate AB	=	constant flow rate
Gate A	=	variable flow
Gate B	=	bypass (variable flow)
Mixing		Flow from gate A and gate B to gate AB
Distribution		Flow from gate AB to gate A and gate B

Valve section

Liquids

Mixing valve (preferred)

Diverting valve

A → AB
B

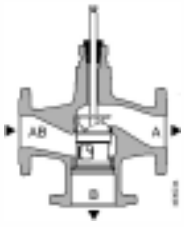

AB → A
B

Description

Three-way valve B3G460

Dimension DN 15-50, PN 10, 110 °C

- Three-way valve in brass
- Connections with inner thread
- Casing, cover, shaft and segment made of brass, maintenance-free O-ring seal
- Installation possible on the left and right side
- Operating pressure 10 bar
- Max. operating temperature + 110 °C

Motor drives

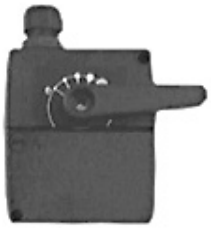

Motor drive NR 230-20B

- 230 V ~
- 2-wire control. Actuation time 140 s, control force 10 Nm
- Ambient temperature 0 °C/50 °C

Motor drive NR 230-20S

- As for drive NR 230-20B
- With auxiliary switch 230 V, 0.5 A and connecting cable 2.0 m

Motor drive NR 230E-20

- 230 V
- Single-wire control. Actuation time 140 s, control force 10 Nm
- Ambient temperature 0 °C/50 °C

Motor drive NR 230E-20S

- As for drive NR 230E-20
- With auxiliary switch 230 V, 0.5 A and connecting cable 2.0 m

■ **Part No.**

Three-way valves — Part No.

Three-way valve B3G460 PN 10
with inner thread, brass
for manual operation or operation with actuator NR..., case, cap, shaft and segment made of brass, maintenance-free O-ring seal.
Mounting optionally on left or right side.
Operating pressure 10 bar.
Max. operating temperature + 110 °C

Type	DN	Screw connection	kvs[1]	Operating pressure bar	Part No.
B3G460	15	Rp ½″	2.5	10	2039 167
B3G460	20	Rp ¾″	6.0	10	2039 168
B3G460	25	Rp 1″	12.0	10	2039 169
B3G460	32	Rp 1¼″	18.0	10	2039 170
B3G460	40	Rp 1½″	26.0	10	2039 171
B3G460	50	Rp 2″	40.0	10	2039 172

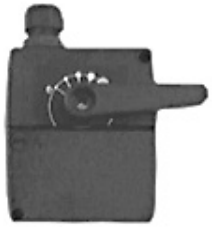

Motor drive for three-way valves DN 15 to DN 50

For valves B3G460.
Operating voltage 230 V/50 Hz, torque 10 Nm, actuation time 140 s, manual/automatic positioning, reversible scale for position indicator 0....10.

Motor drive for three-way valves: 2-wire control	**NR 230-20B**	245 209
Motor drive for three-way valves: 2-wire control with auxiliary switch	**NR 230-20S**	245 212
Motor drive for three-way valves: Single-wire control	**NR 230E-20**	245 235
Motor drive for three-way valves: Single-wire control with auxiliary switch	**NR 230E-20S**	245 215

Technical data

Installation notices

- The device must not be installed with the motor facing downwards.
- The three-way valve can be used both for mixing as well as for distributing.
- The permitted pressure difference Δp max. may not be exceeded.

Installation

- Observe the installation instructions when assembling drive and mixing valve.
- The black adapter sleeve must be used for the three-way valve.

Electrical connection

1 x 230 V, 50 Hz, 3.5 W

Type NR 230-20 B

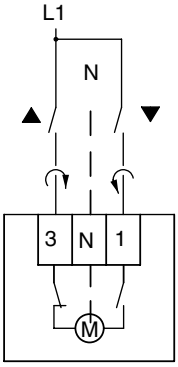

Type NR 230-20S
with 2 m connecting cable.
with auxiliary switch 230 V, 0.5 A.
Function is adjustable.

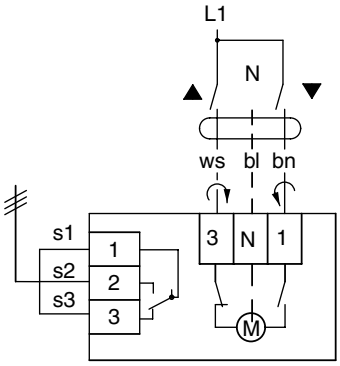

Type NR 230E-20
with 2 m connecting cable.
without auxiliary switch 230 V,
0.5 A. Function is adjustable.

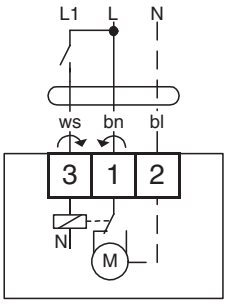

Rotate clockwise to open
Rotate anti-clockwise to open

Installation position type B3G460
The direction of motor rotation is anti-clockwise

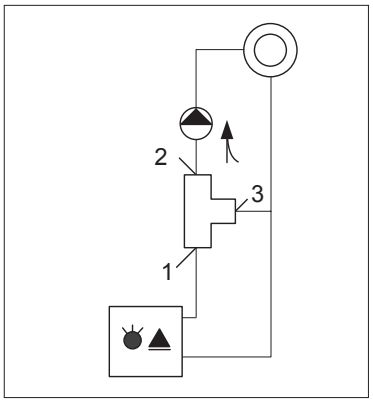

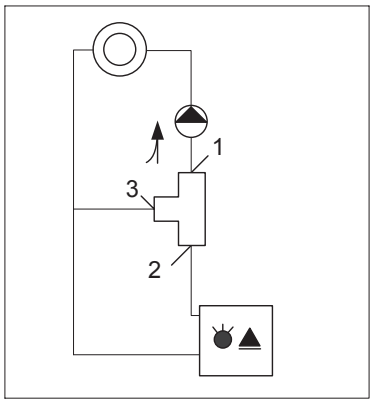

Notice:
Numbers correspond to numbers on the valve

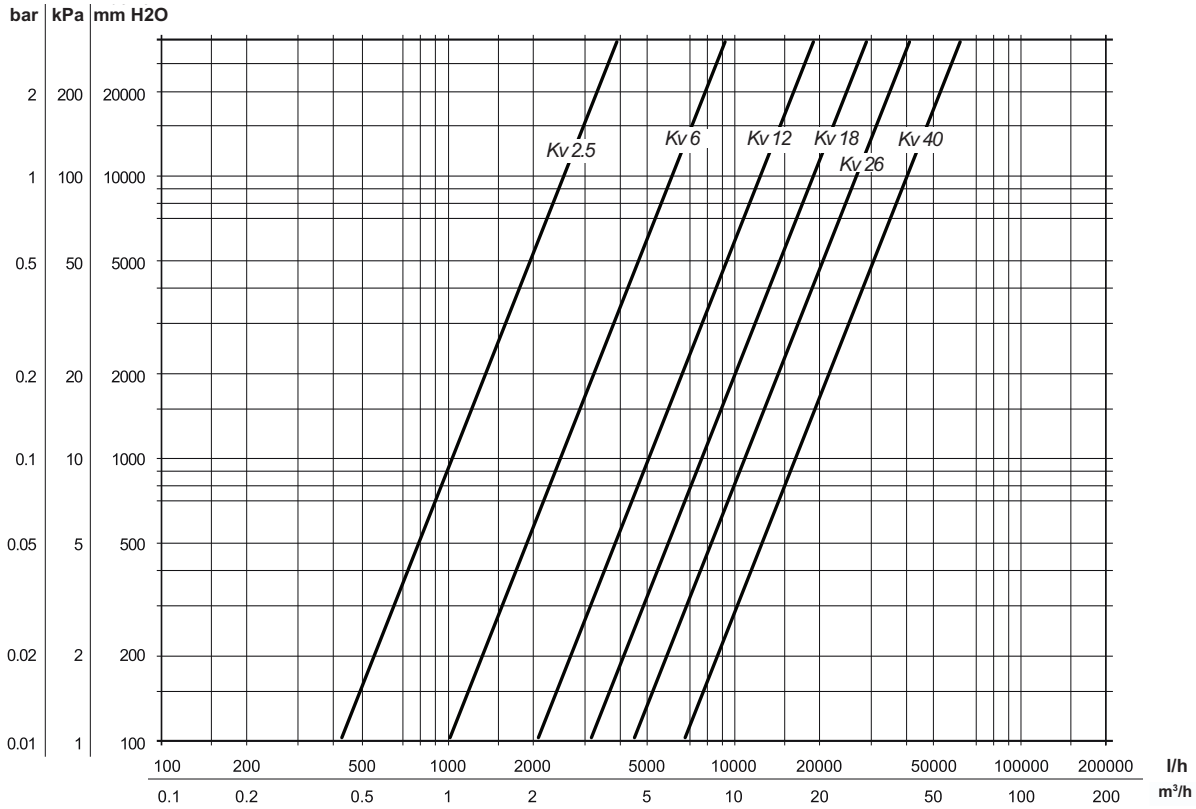

Dimensions

Motorised three-way valve B3G460/ NR 230-20

- Three-way valves made of brass, connections with inner thread
- Max. operating temperature + 110 °C
- Operating pressure PN 10
- Motor drive, 230 V, 50 Hz
- Actuation time 140 s
- Control force 10 Nm
- Lever for manual operation
- Ambient temperature 0/+50 °C

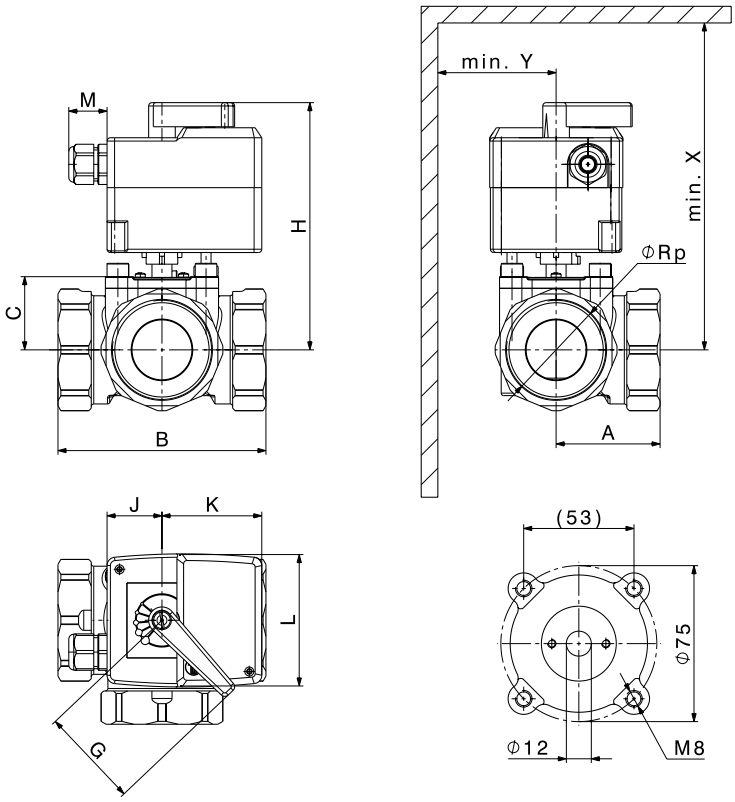

DN	Screw connection	kvs[1]	A	B	C	G	H	J	K	L	M	X	Y	kg
15	Rp ½″	2.5	40	80	34.5	60	139.5	33	60	80	23	220	50	1.07
20	Rp ¾″	6	41	81	34.5	60	139.5	33	60	80	23	220	50	1.13
25	Rp 1″	12	41	82	34.5	60	142	33	60	80	23	230	50	1.27
32	Rp 1¼″	18	42.5	85	37	60	142	33	60	80	23	230	50	1.63
40	Rp 1½″	26	58	116	41.5	60	147	33	60	80	23	240	50	2.66
50	Rp 2″	40	62.5	125	42.5	60	147	33	60	80	23	240	50	2.81

[1] = volume flow m^3/h at a flow resistance of 1 bar

Description

Thermostatic water mixer TM200

3-way mixing valve made of brass
for domestic water temperature regulation.
Connection fittings R ¾″
Water temperature max. 90 °C
Setting range 30-60 °C
Throughput quantity 27 l/min (at Δp = 1 bar)
kvs value 1.62

Part No.

Thermostatic water mixer TM200	Part No.
Thermostatic water mixer TM200 3-way-mixing valve for regulating of the water temperature Material: brass Connection dimension R ¾″ Hot water temperature max. 90 °C Adjustment range 30-60 °C Flow rate 27 l/min (at delta p = 1 bar) Flow coefficient value (kvs) 1.62	2005 915

Further types/sizes
see Solar/Solar armature groups

Technical data/dimensions

Thermostatic water mixer TM200
(Dimensions in mm)

3-way mixing valve made of brass
for domestic water temperature regulation.

- Operating pressure max. 10 bar
- Max. pressure difference 2.5 bar
- Installation position as required
- Water temperature max. 90 °C
- Connection fitting R ¾″
- Setting range 30-60 °C
  Factory setting for 40 °C
- Throughput quantity
  at Δp = 1 bar 27 l/min
- kvs value 1.62
- Adjustment precision <± 4 K

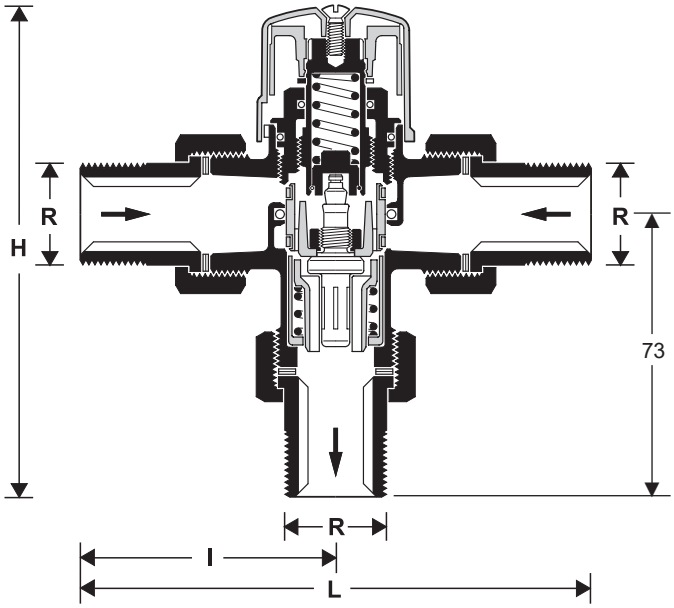

	H	L	I	R ∅	Connection
TM200	128	134	67	22	¾″

Description

Thermostatic mixing valve JRG

3-way mixing valve made of gunmetal
for regulation of the domestic and heating water temperature

- Domestic hot water max.
  DN 25,50,65: 90 °C
  DN 32,40: 105 °C
- Setting range: 45-65 °C
- Factory-set to: 55 °C
- Operating pressure: max. 10 bar
- Connections:
  JRG 25-50: external thread incl. screw connections
  JRG 65: flanges with flange seals

JRG 25-50

JRG 65

Part No.

Thermostatic mixing valve JRG				Part No.
Thermostatic mixing valve JRG 3-way mixing valve made of gunmetal for regulation of the water temperature Domestic hot water max. DN 25,50,65: 90 °C DN 32,40: 105 °C Setting range: 45-65 °C Factory-set to: 55 °C Operating pressure: max. 10 bar Connections: JRG 25-50: external thread incl. screw connections JRG 65: flanges with flange seals				
Type	Dimension	Connection size	kvs value m^3/h	
JRG 25	1″	1½″	4.0	2061 407
JRG 32	1¼″	2″	8.5	2061 408
JRG 40	1½″	2¼″	12.0	2061 409
JRG 50	2″	2¾″	16.0	2061 410
JRG 65	2½″	2½″	28.0	2038 638

Technical data/dimensions

Thermostatic mixing valve JRG

3-way mixing valve made of gunmetal
for regulation of the domestic and heating water temperature

- Domestic hot water max.
  DN 25,50,65: 90 °C
  DN 32,40: 105 °C
- Setting range: 45-65 °C
- Factory-set to: 55 °C
- Operating pressure: max. 10 bar
- Connections:
  JRG 25-50: external thread incl. screw connections
  JRG 65: flanges with flange seals

Pressure drop diagram

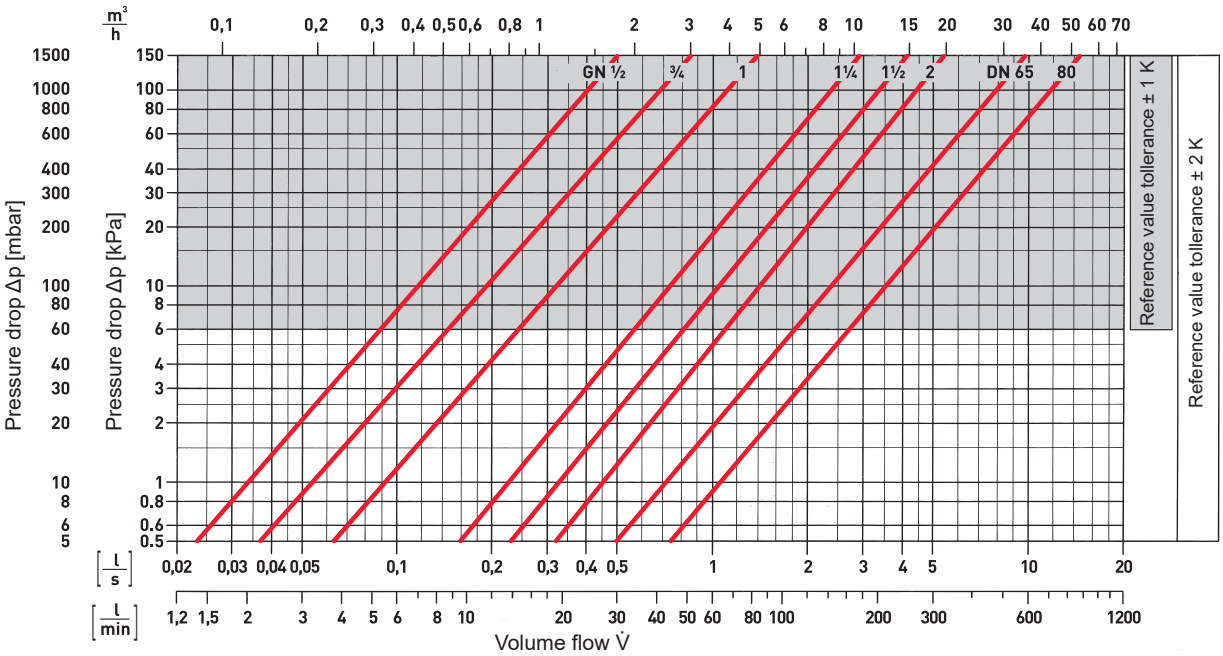

Dimensions

JRG 25-50
(Dimensions in mm)

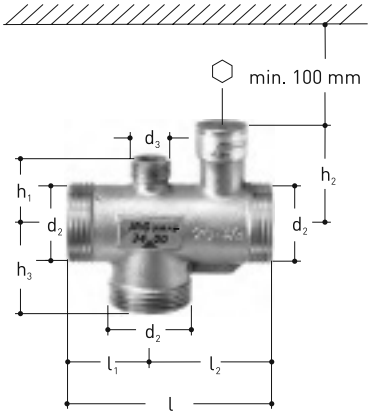

Screw connection
made of gunmetal with internal thread and seal

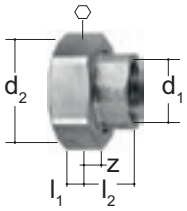

DN	d2	d3	h1	h2	h3	l	l1	l2	⬡	°C	Max. temp. °C	kg
25	G 1½″	G ¾″	36	51	43	110	43	67	5	55	90	0.87
32	G 2″	G ¾″	41	75	52	130	52	78	8	55	105	1.60
40	G 2¼″	G ¾″	50	77	58	150	58	92	8	55	105	2.10
50	G 2¾″	G ¾″	60	85	70	180	70	110	8	55	90	3.37

d1	d2	l1	l2	z	⬡
Rp 1″	G 1½″	9.0	27.0	10.0	54
Rp 1¼″	G 2″	10.0	29.0	10.0	66
Rp 1½″	G 2¼″	11.0	33.0	14.0	72
Rp 2″	G 2¾″	13.5	35.5	11.5	89

JRG 65
(Dimensions in mm)

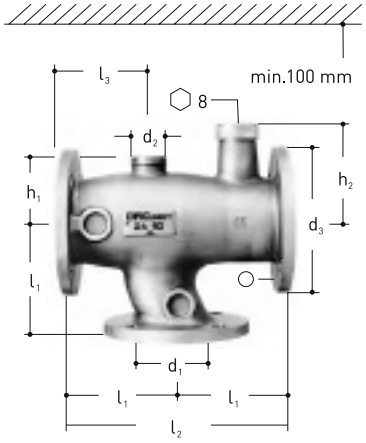

DN	d1	d2	d3	h1	h2	l1	l2	l3	⬡	°C	Max. temp. °C	kg
65	65	G 1½″	185	82	121	145	290	112	4	55	90	23.00

Description

Straight-way ball valve VAG60..
Size DN 15-50, PN 16, 120 °C

- Ball valve body made of brass, incl. seals, screw connections and cap
- Angle of rotation 90°
- Switching ball valve
- DN 15..50
  Kvs 9..96

Suitable motor drive GLB341.9E

Part No.

Straight-way ball valves PN 16, 120 °C, thread — **Part No.**

Straight-way ball valve VAG60..
DN 15-50, PN 16, 120 °C

- Straight-way ball valve made of brass with threaded connection
- incl. seals and screw connections

DN	Connection Valve	Connection Fitting	kvs	V̇ [m³/h] at ΔP 50 mbar	Part No.
15	G 1″	Rp ½″	9	2.01	6046 579
20	G 1¼″	Rp ¾″	17	3.80	6046 580
25	G 1½″	Rp 1″	22	4.92	6046 581
32	G 2″	Rp 1¼″	35	7.83	6046 582
40	G 2¼″	Rp 1½″	68	15.21	6046 593
50	G 2¾″	Rp 2″	96	21.47	6046 594

Suitable motor drive

Type	Voltage	Control signal	Actuator run time	Part No.
GLB341.9E	230 V / 50/60 Hz	2-/3-point	150 s	2070 331

Selection table valve/motor drive

DN	GLB341.9E 10 Nm ΔP max. [mbar]
15	3500
20	3500
25	3500
32	3500
40	3500
50	3500

kvs = nominal flow rate of water (5…30 °C) across the fully opened valve (H100) at a differential pressure of 1 bar
Sv = setting ratio kvs / kvr
ΔPmax. = maximum permitted pressure difference across the valve, low-noise operation up to 2000 mbar
kvr = minimum kv value at which the characteristic tolerance is still maintained at a differential pressure of 100 kPa (1 bar)

Dimensions

Straight-way ball valve VAG60…
with threaded connection PN 16, 120 °C

- Ball valve body made of brass
- DN 15...50
- Kvs 9...96 m^3/h
- Angle of rotation 90°
- Max. operating temperature 120 °C
- Can be fitted with motor-driven actuators GSD..9A and GLB..9E

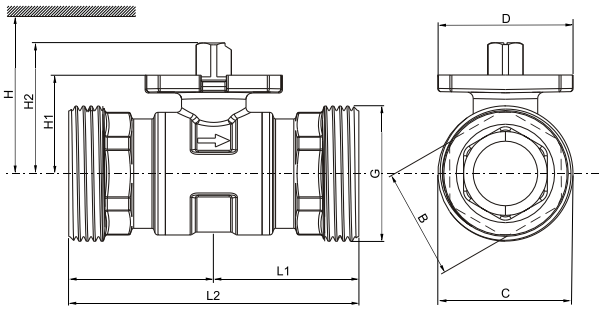

DN	kg	B mm	C mm	D mm	G Inches	L1 mm	L2 mm	H1 mm	H2 mm	H GSD..9A	H GLB..9E
15	0.36	27	33	42	G 1 B	43.5	87	27.6	37.6	> 300	> 300
20	0.55	35	42	42	G 1¼ B	44.7	89.4	30.5	40.5	> 300	> 300
25	0.57	35	48	42	G 1½ B	44.7	89.4	30.5	40.5	> 320	> 320
32	0.84	38	59.7	42	G 2 B	50.1	100.2	34.3	44.3	-	> 320
40	1.29	49	65.7	42	G 2¼ B	58.3	116.6	39.8	49.8	-	> 320
50	1.98	61	81.6	42	G 2¾ B	62	124	52.8	62.8	-	> 335

DN = Nominal diameter
H = overall height of the actuator plus minimum distance to the wall or ceiling for installation, connection, operation, maintenance etc.
H1 = Installation height from the pipe centre for installation of the actuator (top edge)

Fittings

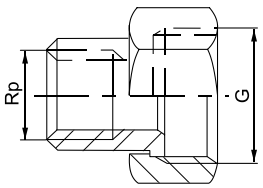

DN	G Inches	Rp Inches
VAG60.15	G 1 B	Rp ½
VAG60.20	G 1¼ B	Rp ¾
VAG60.25	G 1½ B	Rp 1
VAG60.32	G 2 B	Rp 1¼
VAG60.40	G 2¼ B	Rp 1½
VAG60.50	G 2¾	Rp 2

- Valve side with cylindrical thread according to ISO 228-1
- Tube side with cylindrical thread according to ISO 7-1
- Fittings up to 100 °C media temperature

Technical data

Flow rate diagram

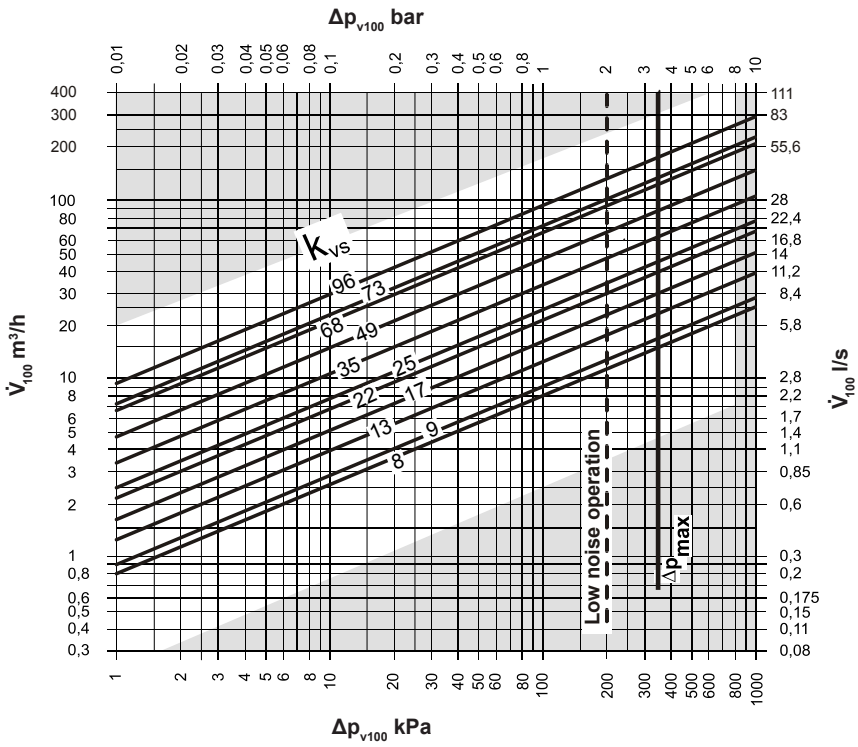

Δp_{max}	=	maximum permitted pressure difference across the ball valve, valid for the entire setting range of the ball valve-rotary actuator unit; if low-noise operation is required, we recommend a maximum permitted pressure difference of 200 kPa
Δp_{v100}	=	differential pressure across the fully opened ball valve and above the control path at a flow rate V_{100}
V_{100}	=	flow rate through the fully opened ball valve
100 kPa	=	1 bar ≈ 10 mWC
1 m³/h	=	0.278 l/s water of 20 °C

Valve section

Position at delivery

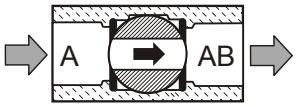

A – AB = 100 %

Turned through 90° (clockwise)

A – AB = 0 %

Description

Switching ball valve VBG60..
Size DN 15-50, PN 16, 120 °C

- Ball valve body made of brass, incl. seals, screw connections and cap
- Angle of rotation 90°
- Switching ball valve
- DN 15..50
  Kvs 8..73

Suitable motor drive GLB341.9E

Part No.

Switching ball valves PN 16, 120 °C, thread — **Part No.**

Switching ball valve VBG60..
DN 15-50, PN 16, 120 °C

- Three-way ball valve made of brass with threaded connection
- incl. seals and screw connections

DN	Connection Valve	Connection Fitting	kvs	V̇ [m³/h] at ΔP 50 mbar	Part No.
15	G 1″	Rp ½″	8	1.79	6045 767
20	G 1¼″	Rp ¾″	13	2.91	6045 768
25	G 1½″	Rp 1″	13	2.91	6045 769
32	G 2″	Rp 1¼″	25	5.59	6045 770
40	G 2¼″	Rp 1½″	49	10.96	6045 771
50	G 2¾″	Rp 2″	73	16.32	6045 772

Suitable motor drive

Type	Voltage	Control signal	Actuator run time	Part No.
GLB341.9E	230 V / 50/60 Hz	2-/3-point	150 s	2070 331

kvs = nominal flow rate of water (5…30 °C) across the fully opened valve (H100) at a differential pressure of 1 bar
Sv = setting ratio kvs / kvr
ΔPmax. = maximum permitted pressure difference across the valve, low-noise operation up to 2000 mbar
kvr = minimum kv value at which the characteristic tolerance is still maintained at a differential pressure of 100 kPa (1 bar)

Selection table valve/motor drive

DN	GLB341.9E 10 Nm ΔP max. [mbar]
15	3500
20	3500
25	3500
32	3500
40	3500
50	3500

Dimensions

Switching ball valve VBG60…
with threaded connection PN 40, 120 °C

- Ball valve body made of brass
- DN 15...50
- Kvs 8…73 m³/h
- Angle of rotation 90°
- Max. operating temperature 120 °C
- Can be fitted with motor-driven actuators GSD..9A and GLB..9E

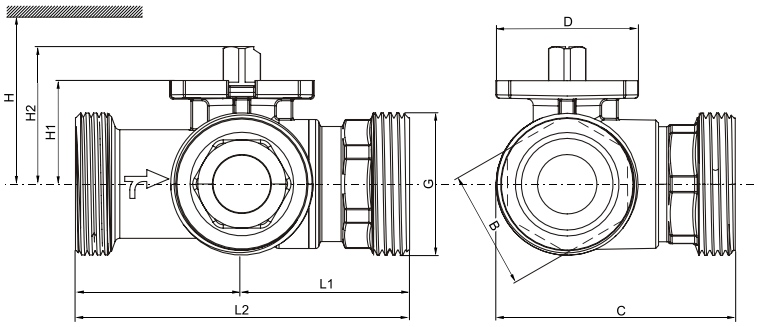

DN	kg	B	C	D	G Inches	L1	L2	H1	H2	H GSD..9A	H GLB..9E
15	0.45	27	61	42	G 1 B	44.3	88.6	27.6	37.6	> 300	> 300
20	0.68	35	70	42	G 1¼ B	49	98	30.5	40.5	> 300	> 300
25	0.75	35	73	42	G 1½ B	49.2	98.4	30.5	40.5	> 320	> 320
32	1.2	38	94	42	G 2 B	57	114	34.3	44.3	-	> 320
40	1.84	49	107	42	G 2¼ B	63.8	127.6	39.8	49.8	-	> 320
50	2.83	61	123	42	G 2¾ B	69	138	52.8	62.8	-	> 335

DN = nominal diameter
H = overall height of the actuator plus minimum distance to the wall or ceiling for installation, connection, operation, maintenance etc.
H1 = Installation height from the pipe centre for installation of the actuator (top edge)

Fittings

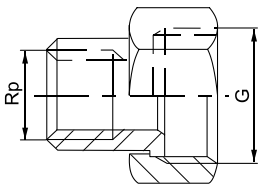

DN	G Inches	Rp Inches
VBG60.15	G 1 B	Rp ½
VBG60.20	G 1¼ B	Rp ¾
VBG60.25	G 1½ B	Rp 1
VBG60.32	G 2 B	Rp 1¼
VBG60.40	G 2¼ B	Rp 1½
VBG60.50	G 2¾	Rp 2

- Valve side with cylindrical thread according to ISO 228-1
- Tube side with cylindrical thread according to ISO 7-1
- Fittings up to 100 °C media temperature

Technical data

Flow rate diagram

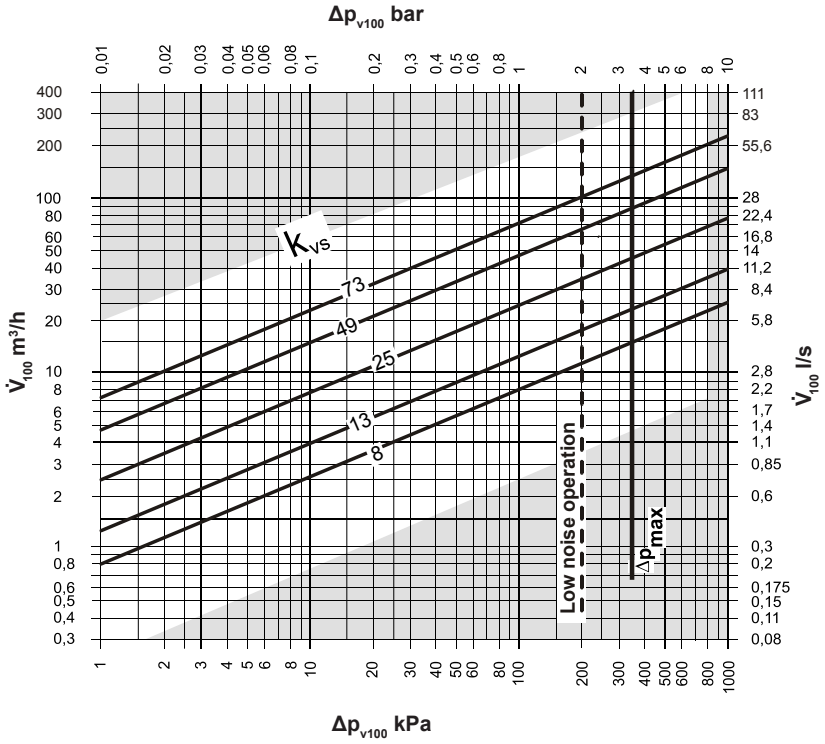

Δp_{max}	=	maximum permitted pressure difference across the ball valve, valid for the entire setting range of the ball valve-rotary actuator unit; if low-noise operation is required, we recommend a maximum permitted pressure difference of 200 kPa
Δp_{v100}	=	differential pressure across the fully opened ball valve and above the control path at a flow rate V100
V_{100}	=	flow rate through the fully opened ball valve
100 kPa	=	1 bar ≈ 10 mWC
1 m³/h	=	0.278 l/s water of 20 °C

Valve section

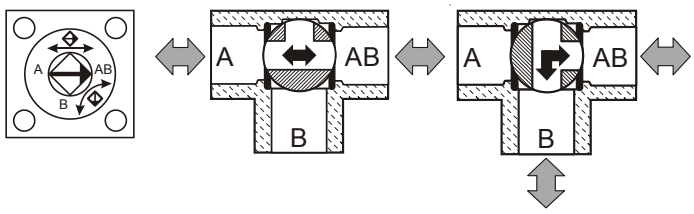

A – AB = 100 %
B – AB = 0 %

A – AB = 0 %
B – AB = 100 %

Description

Motor drive GLB341.9E
Electromotive rotary actuator for 2-point, 3-point control
Operating voltage 230 V, 50/60 Hz
- Control signal 2-point / 3-point
- Single-wire / two-wire control
- Nominal torque 10 Nm
- Actuator run time 150 s
- Manual adjustment
- Permitted ambient temperature -32 °C to +55 °C
- For straight-way ball valves VAG60.. and switching ball valves VBG60.. DN 15..50

Motor drive SAX319.00
Operating voltage 230 V, 50/60 Hz
- Control signal 3-point
- Actuator run time 120 s
- Actuator force 800 N
- Stroke 20 mm
- For direct installation on valves without setting work
- Permitted ambient temperature -5 °C to +55 °C
- For VVF22.., VXF22.., VVG41.50 and VXG41.50 valves up to DN 80

Motor drive SAX319.03
Operating voltage 230 V, 50/60 Hz
- Control signal 3-point
- Actuator run time 30 s
- Actuator force 800 N
- Stroke 20 mm
- For direct installation on valves without setting work
- Permitted ambient temperature -5 °C to +55 °C
- For VVF22.., VXF22.. VVG41.50 and VXG41.50 valves up to DN 80

Motor drive SKC32.60
Operating voltage 230 V, 50/60 Hz
- Control signal 3-point
- Actuator force 2800 N
- Actuator run time 120 s
- For direct installation on valves without setting work
- With manual adjustment and position display
- Permitted ambient temperature -15 °C to +55 °C
- Stroke 40 mm
- For VVF22.., VXF22.. and VXF32.. valves from DN 100

Motor drive SSC319
Operating voltage 230 V, 50/60 Hz
- Control signal 3-point
- Actuator run time 150 s
- Actuator force 300 N
- Stroke 5.5 mm
- For direct installation without tools via union nut
- Permitted ambient temperature 5 °C to +55 °C
- For YVG48.. and YXG48 valves

Description

Motor drive SAS31.00
Operating voltage 230 V, 50/60 Hz
- Control signal 3-point
- Actuator run time 120 s
- Actuator force 400 N
- Stroke 5.5 mm
- For direct installation on valves without setting work
- Permitted ambient temperature -5 °C to +55 °C
- For YVG48.. and YXG48 valves

Motor drive SAS31.03
Operating voltage 230 V, 50/60 Hz
- Control signal 3-point
- Actuator run time 30 s
- Actuator force 400 N
- Stroke 5.5 mm
- For direct installation on valves without setting work
- Permitted ambient temperature -5 °C to +55 °C
- For YVG48.. and YXG48 valves

Motor drive SAX619.03
Operating voltage 24 VAC
- Control signal 0...10 V
- Actuator run time 30 s
- Actuator force 800 N
- Stroke 20 mm
- For direct installation on valves without setting work
- Permitted ambient temperature -5 °C to +55 °C
- For VVF22.., VXF22.. VVG41.50 and VXG41.50 valves up to DN 80

Notice
The SAX619.03 motor drive can not be supplied with voltage by the TopTronic® E. Provide a separate 24 V supply.

Motor drive SKC60
Operating voltage 24 VAC
- Control signal 0...10V
- Actuator force 2800 N
- Actuator run time, open 120 s/close 20 s
- For direct installation on valves without setting work
- With manual adjustment and position display
- Permitted ambient temperature -15 °C to +55 °C
- Stroke 40 mm
- For VVF22.., VXF22.. and VXF32.. valves from DN 100

Notice
The SKC60 motor drive can not be supplied with voltage by the TopTronic® E. Provide a separate 24 V supply.

Motor drive SAS61.03
Operating voltage 24 VAC
- Control signal 0...10 V
- Actuator run time 30 s
- Actuator force 400 N
- Stroke 5.5 mm
- For direct installation on valves without setting work
- Permitted ambient temperature -5 °C to +55 °C
- For YVG48.. and YXG48 valves

Notice
The SAS61.03 motor drive can not be supplied with voltage by the TopTronic® E. Provide a separate 24 V supply.

Notice
Electrical connection
see data sheet of the particular drive

Part No.

	Motor drives	Part No.
	**Electromotive rotary drive GLB341.9E** Operating voltage 230 V, 50/60 Hz Control signal 2-point/3-point 1 - 2 wire control Operating time 150 s Nominal torque 10 Nm Permitted ambient temperature -32 °C to +55 °C For switchover ball valves VAG60.. and changeover ball valves VBG60.. DN 15..50	2070 331
	**Electromotive actuator** **SAX319.00** Operating voltage 230 V, 50/60 Hz Control signal 3-point Operating time 120 s Actuating power 800 N Nominal stroke 20 mm Permitted ambient temperature -5°C to +55°C For through and three-way valves VVG41.50, VVF22.., VXG41.., VXF22.. DN 15..80	2048 444
	**Electromotive actuator** **SAX319.03** Operating voltage 230 V, 50/60 Hz Control signal 3-point Operating time 30 s Actuating power 800 N Nominal stroke 20 mm Permitted ambient temperature -5°C to +55°C For through and three-way valves VVG41.50, VVF22.., VXG41.., VXF22.. DN 15..80	2048 445
	**Electromotive actuator SKC32.60** Operating voltage 230 V, 50/60 Hz Control signal 3-point Operating time 120 s Actuating power 2800 N Nominal stroke 40 mm Permitted ambient temperature -15°C to +55°C For through and three-way valves VVF22.., VXF22.., VXF32.. from DN 100	2048 451
	**Electromotive actuator SSC319** Operating voltage 230 V, 50/60 Hz Control signal 3-point Operating time 150 s Actuating power 300 N Nominal stroke 5.5 mm Permitted ambient temperature 0°C to +55°C For through and three-way valves YVG48.., YXG48..	245 236

Part No.

	Motor drives	Part No.
	**Electromotive actuator SAS31.00** Operating voltage 230 V, 50/60 Hz Control signal 3-point Operating time 120 s Actuating power 400 N Nominal stroke 5.5 mm Permitted ambient temperature -5°C to +55°C For through and three-way valves YVG48.., YXG48..	2064 157
	**Electromotive actuator SAS31.03** Operating voltage 230 V, 50/60 Hz Control signal 3-point Operating time 30 s Actuating power 400 N Nominal stroke 5.5 mm Permitted ambient temperature -5°C to +55°C For through and three-way valves YVG48.., YXG48..	2064 158
	**Electromotive actuator SAX619.03** Operating voltage 24 V AC Control signal 0-10 V Operating time 30 s Actuating power 800 N Nominal stroke 20 mm Permitted ambient temperature -5°C to +55°C For through and three-way valves VVG41.50, VVF22.., VXG41.., VXF22.. from DN 15 to DN 80	2048 446 **Notice** The SAX619.03 motor drive can not be supplied with voltage by the TopTronic® E. Provide a separate 24 V supply.
	**Electromotive actuator SKC60** Operating voltage 24 V AC Control signal 0-10 V Actuator run time open 120 s/close 20 s Actuating power 2800 N Nominal stroke 40 mm Permitted ambient temperature -15°C to +55°C For through and three-way valves VVF22.., VXF22.., VXF32.. from DN 100	2048 453 **Notice** The SKC60 motor drive can not be supplied with voltage by the TopTronic® E. Provide a separate 24 V supply.
	**Electromotive actuator SAS61.03** Operating voltage 24 V AC Control signal 0-10 V Operating time 30 s Actuating power 400 N Nominal stroke 5.5 mm Permitted ambient temperature -5°C to +55°C For through and three-way valves YVG48.., YXG48..	2064 161 **Notice** The SAS61.03 motor drive can not be supplied with voltage by the TopTronic® E. Provide a separate 24 V supply.

Dimensions

Motor drive GLB341.9E
(Dimensions in mm)

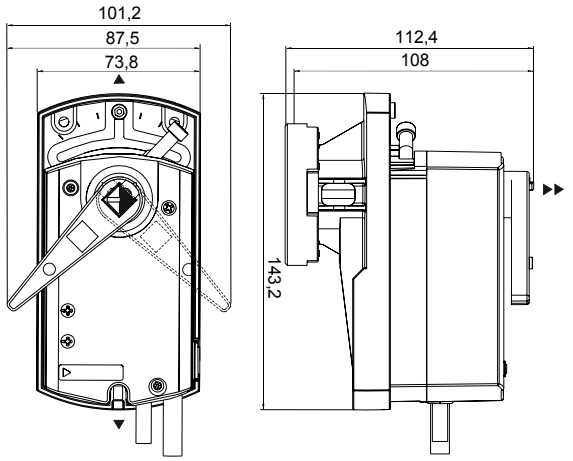

Electrical connection
AC 100…240 V ~

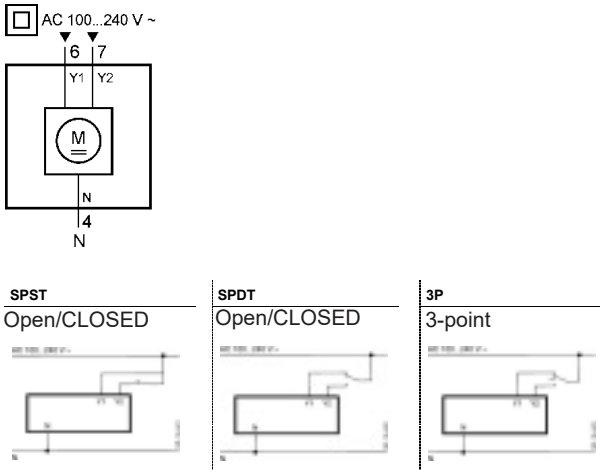

Connection	Code	No.	Colour	Abbreviation	Meaning
Drives	N	4	light blue	BU	Neutral conductor
AC 100...240 V ~	Y1	6	black	BK	Setting signal AC 100…240 V ~ “clockwise” (GLB341.9E)
	Y2	7	white	WH	Setting signal AC 100…240 V ~ “anticlockwise” (GLB341.9E)

Motor drives SKC32.60 / SKC60
(Dimensions in mm)

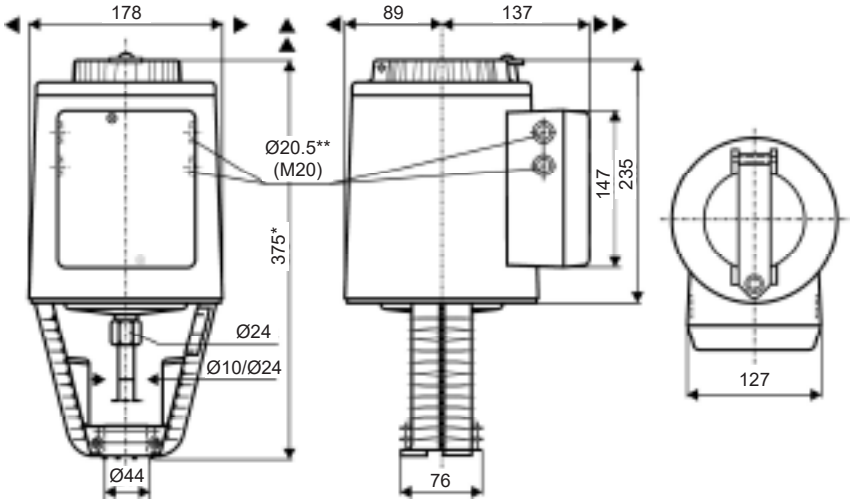

Electrical connection for SKC32.60
AC 230 V, 3-point

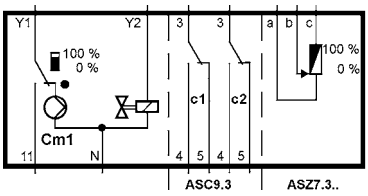

Cm1	Limit switch
n	Bypass valve
c1, c2	ASC9.3 auxiliary switch pair
a, b, c	ASZ7..potentiometer
Y1	Setting signal “open”
Y2	Setting signal “close”
21	Emergency control function
N	Neutral conductor

** SKC..U: for ½″ tube connections (Ø 21.5 mm)
▶ = > 100 mm Minimum distance to the wall or ceiling for installation,
▶▶ = > 200 mm connection, operation, maintenance etc.

Electrical connection SKC60
AC 24 V, DC 0…10 V, 4…20 mA, 0…1000

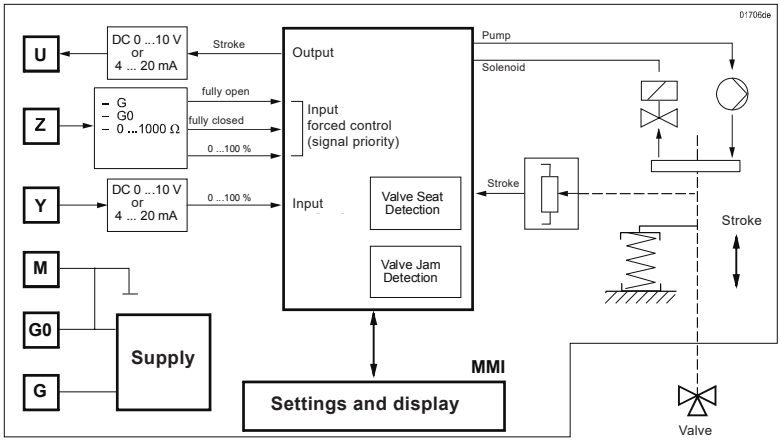

U	Position response
Z	Forced control input
Y	Setting signal
M	Measuring neutral
G0	Operating voltage AC 24 V: system ground
G	Operating voltage AC 24 V: system potential switch to dead voltage to emergency control function

Technical data

Motor drives SAX319.00 / SAX319.03
(Dimensions in mm)

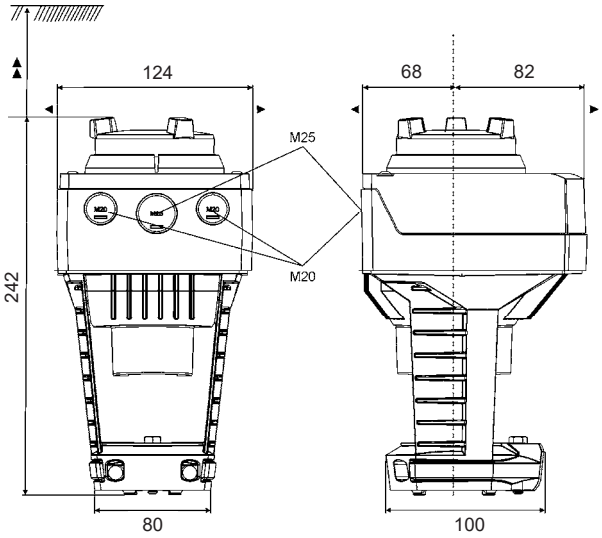

Electrical connection

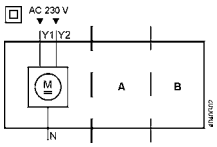

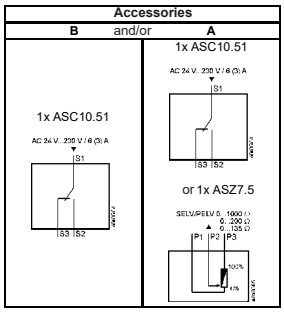

Connection terminals (AC 230 V, 3-point)

N	System ground (SG)
Y1	Setting signal (actuator's stem extends)
Y2	Setting signal (actuator's stem retracts)

Motor drive SSC319
(Dimensions in mm)

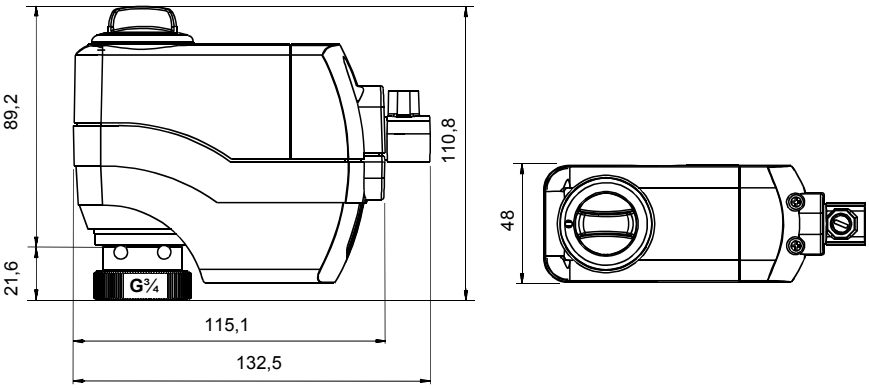

Electrical connection

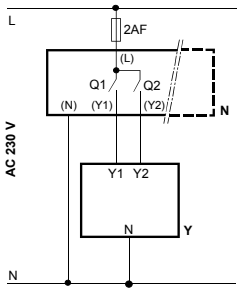

N	Controller
Y	Actuator
L	System potential AC 230 V
N	System ground
Y1, Y2	Setting signals OPEN, CLOSED
Q1, Q2	Controller contacts

Motor drives SAS31.00 / SAS31.03 / SAS61.03
(Dimensions in mm)

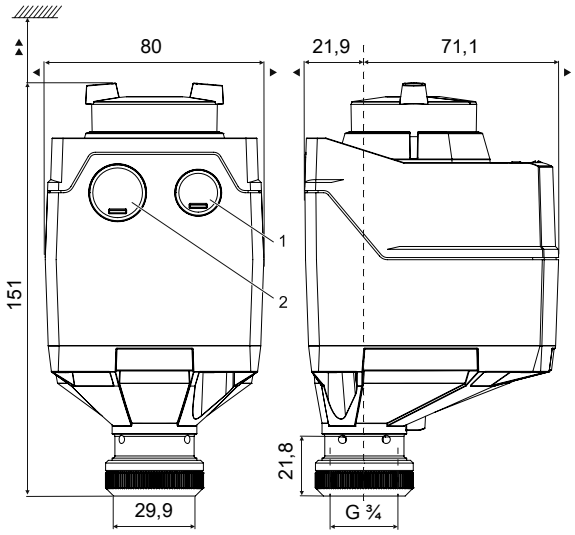

▶ = > 100 mm Minimum distance to the wall or ceiling for installation,
▶▶ = > 200 mm connection, operation, maintenance etc.

Electrical connection for SAS31.00 and SAS31.03

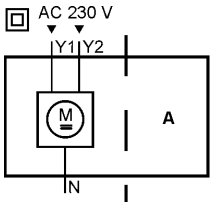

Electrical connection for SAS61.03

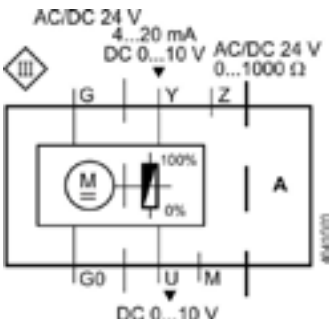

■ Description

Hoval diaphragm-type expansion chambers

Reflex
- For closed heating and cooling water systems
- Works on the static pressure maintenance principle using a nitrogen buffer. The gas chamber and water chamber are separated from each other by a diaphragm.
- Non-replaceable diaphragm
- With threaded or flange connectors
- Permissible operating temperature container/diaphragm 120°C/70°C

Reflex N 8-25
- Vessel nominal volume 8-25 litres
- Permissible operating overpressure 6 bar
- For wall installation

Reflex NG 35-140, N 200-1000
- Vessel nominal volume 35-1000 litres
- Permissible operating overpressure 6 bar
- With feet

Reflex S
- Especially for solar installations and also for heating and cooling water systems
- Vessel nominal volume 8-600 L
- For anti-freeze additive up to 50 %
- Permissible operating overpressure 10 bar
- For wall installation, from type S 50 with feet

Reflex F
- Space-saving flat-form vessel nominal volume 18, 24 litres
- Permissible operating overpressure 3 bar
- With fastening lug for wall installation

Reflex C
- Vessel in disc shape, nominal volume 18-80 litres
- For anti-freeze additive up to 50 %
- Butyl membrane acc. to DIN 4807 T3
- Permissible operating overpressure 3 bar
- Integrated suspension lug for wall mounting

Delivery
- Expansion chamber delivered separately packed

On site
- Safety valve/pressure gauge

Reflex NG
Wall vessel

NG 8
NG 12
NG 18
NG 25

Reflex NG/N
with feet

NG 35
NG 50
NG 80
NG 100
NG 140
N 200
N 250
N 300
N 400
N 500
N 600
N 800
N 1000

Reflex S
Wall vessel

S 8
S 12
S 18
S 25
S 33

Reflex S
with feet

S 50
S 80
S 100
S 140
S 200
S 250
S 300
S 400
S 500
S 600

Reflex F
Flat-form vessel

F 18
F 24

Reflex C
Disc shape

C 18
C 25
C 35
C 50
C 80

Reflex V
Series-connected container

V 6
V 12
V 20
V 40
V 60
V 200
V 300
V 350

Reflex EB
Sludge removal vessel

EB 30
EB 60
EB 80
EB 100
EB 180
EB 300
EB 400
EB 750

Approval

acc. to Pressure Vessels Directive 97/23EC

Reflex in-line vessel V
- Made of sheet steel from V 40 on feet
- Necessary for plants with return flow temperatures > 70 °C
- Can also be used as buffer chamber
- Admissible operating temperature 120 °C
- For operating overpressure up to 10 bar

Delivery
- Series-connected container delivered separately packed.

Reflex sludge removal vessel EB
- For separation of fine sludge particles, e.g. in old systems, and for protecting against deposits in heat generators.
- For installation in return flow
- For heating and cooling water systems
- For low system pressures
- Permissible operating overpressure
  EB 30-100, 10 bar
  EB 180-750, 6 bar
- Admissible operating temperature 120 °C

Delivery
- Sludge removal vessel delivered in separate packaging.

■ **Part No.**

Diaphragm-type expansion chambers — Part No.

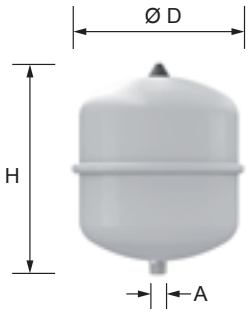

8-25 litres

Reflex NG 8-25
Vessel for wall installation. Permitted operating overpressure 6 bar. Permitted operating temperature of vessel/diaphragm 120 °C/70 °C.
For wall installation with clamping band (clamping band see accessories)

Reflex type	Ø D mm	H mm	A	Part No.
NG 8	206	305	R ¾″	2006 650
NG 12	280	275	R ¾″	242 789
NG 18	280	380	R ¾″	242 790
NG 25	280	490	R ¾″	242 791

35-1000 litres

Reflex NG 35-140, N 200-1000
Vessel with feet. Permitted operating overpressure 6 bar. Permitted operating temperature of vessel/diaphragm 120 °C/70 °C.

Reflex type	Ø D mm	H mm	h mm	A	Part No.
NG 35	354	460	130	R ¾″	242 792
NG 50	409	493	175	R ¾″	2026 088
NG 80	480	565	166	R 1″	2026 089
NG 100	480	670	166	R 1″	2026 090
NG 140	480	912	175	R 1″	2026 091
N 200	634	758	205	R 1″	242 797
N 250	634	888	205	R 1″	242 798
N 300	634	1092	235	R 1″	242 799
N 400	740	1102	245	R 1″	242 800
N 500	740	1321	245	R 1″	242 801
N 600	740	1531	245	R 1″	2006 651
N 800	740	1996	245	R 1″	2006 652
N 1000	740	2406	245	R 1″	2006 653

Reflex S
Especially for solar installations and also for heating and cooling water systems.
For anti-freeze additive up to 50 %.
Permitted operating overpressure 10 bar.
Permitted operating temperature of vessel/diaphragm 120 °C/70 °C.
Type S 8-25 for wall installation with clamping band (clamping band see accessories)
Type S 33 for wall installation with lugs.
Type S 50-600 with feet.

Reflex type	Ø D mm	H mm	h mm	A	Part No.
S 8	206	335	-	G ¾″	2006 634
S 12	280	300	-	G ¾″	2006 635
S 18	280	410	-	G ¾″	2006 636
S 25	280	520	-	G ¾″	2006 637
S 33	354	455	-	G ¾″	2006 638
S 50	409	469	158	R ¾″	2006 639
S 80	480	565	166	R 1″	2006 640
S 100	480	670	166	R 1″	2006 641
S 140	480	941	166	R 1″	2017 376
S 200	634	758	205	R 1″	2006 642
S 250	634	888	205	R 1″	2017 384
S 300	634	1092	235	R 1″	2006 643
S 400	740	1102	245	R 1″	2017 385
S 500	740	1321	245	R 1″	2006 644
S 600	740	1559	245	R 1″	2017 386

■ Part No.

Diaphragm-type expansion chambers — Part No.

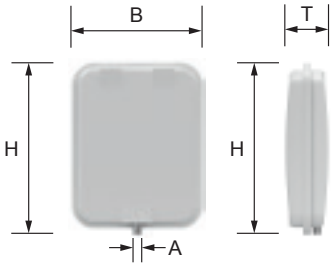

Reflex F
Flat-form vessel for wall installation with fastening lug. Permitted operating overpressure up to 3 bar. Permitted operating temperature of vessel/diaphragm 120 °C/70 °C.

Reflex type	H mm	B mm	T mm	A	Part No.
F 18	444	350	158	G ¾″	2006 627
F 24	444	350	180	G ¾″	2006 628

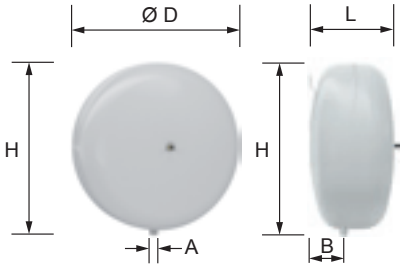

Reflex C
Vessel in disc shape for wall mounting incl. wall holder. For anti-freeze additive up to 50 %. Permitted operating overpressure 3 bar.
Permitted operating temperature of vessel/diaphragm 120 °C/70 °C.

Reflex type	Ø D mm	H mm	A	L	B	Part No.
C 18	354	362	R ¾″	222	76	2036 400
C 25	409	419	R ¾″	239	93	2036 401
C 35	480	457	R ¾″	240	97	2036 402
C 50	480	457	R ¾″	318	125	2036 403
C 80	634	612	R ¾″	325	135	2036 404

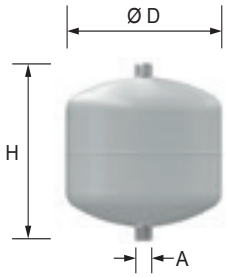

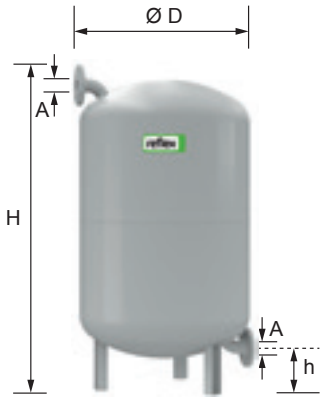

Reflex V
In-line vessel made of sheet steel, from Reflex V 40 on feet.
Designed for operating overpressures up to 10 bar. Type V 6-20 for wall installation with clamping band (clamping band see accessories).

Reflex type	Ø D mm	H mm	h mm	A	Part No.
V 6	206	244	-	R ¾″	2032 084
V 12	280	287	-	R ¾″	2032 085
V 20	280	360	-	R ¾″	2032 086
V 40	409	562	113	R 1″	2057 249
V 60	409	732	172	R 1″	2006 864
V 200	634	901	142	DN 40/PN 16	242 824
V 300	634	1201	142	DN 40/PN 16	242 825
V 350	640	1341	210	DN 40/PN 16	242 827

■ Part No.

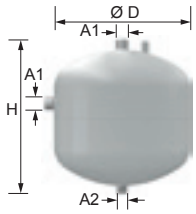

Reflex EB
Sludge removal vessel made of sheet steel from Reflex EB 60 on feet. For separation of fine sludge particles, e.g. in old systems, and for protecting against deposits in heat generators.
For heating and cooling water systems
Permitted operating overpressure
EB 30-100, 10 bar
EB 180-750, 6 bar
Permitted operating temperature 120 °C
Colour red

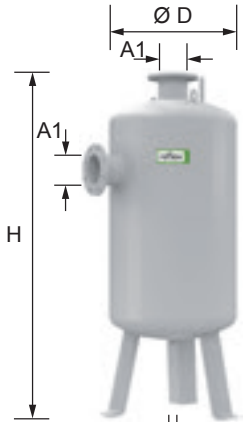

Version 10 bar/120 °C

Reflex type	Through-put V m³/h	Ø D mm	H mm	A1	A2	Part No.
EB 30	2.5	409	455	R 1¼″	R 1″	242 834
EB 60	7.0	409	770	DN 50/PN 16	R 1″	242 835
EB 80	12.0	480	765	DN 65/PN 16	R 1″	242 836
EB 100	18.0	480	870	DN 80/PN 16	R 1″	242 837

Version 6 bar/120 °C

Reflex type	Through-put V m³/h	Ø D mm	H mm	A1	A2	Part No.
EB 180	30.0	600	1110	DN 100/PN 6	R 1″	242 838
EB 300	44.0	600	1600	DN 125/PN 6	R 1″	242 839
EB 400	64.0	750	1500	DN 150/PN 6	R 1″	242 840
EB 750	175.0	750	2215	DN 250/PN 6	R 1″	242 841

Accessories

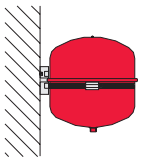

Console with strap-on band — 242 878
for Reflex NG 8-25, S 8-25, V 6-20
vertical installation
container connection upwards or downwards

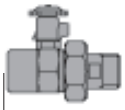

Quick connection SU R ¾″ x ¾″ — 242 771
for diaphragm-type expansion chambers in closed heating and cooling water plants.
With shut-off valve against unintended closing (check ball) and drain according to DIN 4751 Part 2,
tested by TÜV
Connection R ¾″
PN 10/120 °C

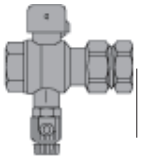

Quick connection SU R 1″ x 1″ — 242 772
for diaphragm-type expansion chambers in closed heating and cooling water plants.
With shut-off valve against unintended closing (check ball) and drain according to DIN 4751 Part 2
tested by TÜV
Connection R 1″ PN10/120 °C

■ Technical data

Reflex
Diaphragm-type expansion chambers

Reflex NG 8-25
- Wall vessel
- Permissible operating overpressure 6 bar
- Permissible operating temperature container/diaphragm 120 °C/70 °C

Type	Nom. volume Vn litres	Weight kg	Ø D mm	H mm	A	Pre-pressure bar
NG 8	8	1.7	206	305	R ¾″	1.5
NG 12	12	2.4	280	275	R ¾″	1.5
NG 18	18	2.9	280	380	R ¾″	1.5
NG 25	25	3.7	280	490	R ¾″	1.5

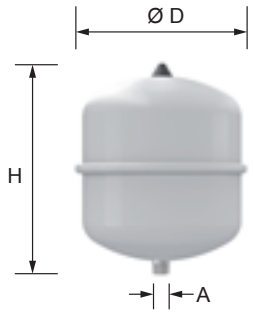

Reflex NG 35-140, N 200-1000
- Vessel nominal volume 35-1000 L
- Permissible operating overpressure 6 bar
- Permissible operating temperature container/diaphragm 120 °C/70 °C

Type 6 bar/120 °C	Weight kg	Ø D mm	H mm	h mm	A	Pre-pressure bar
NG 35	4.8	354	460	130	R ¾″	1.5
NG 50	5.7	409	493	175	R ¾″	1.5
NG 80	9.2	480	565	166	R 1″	1.5
NG 100	11.5	480	670	166	R 1″	1.5
NG 140	13.1	480	912	175	R 1″	1.5
N 200	22.0	634	758	205	R 1″	1.5
N 250	24.7	634	888	205	R 1″	1.5
N 300	27.0	634	1092	235	R 1″	1.5
N 400	47.0	740	1102	245	R 1″	1.5
N 500	52.0	740	1321	245	R 1″	1.5
N 600	66.0	740	1531	245	R 1″	1.5
N 800	96.0	740	1996	245	R 1″	1.5
N 1000	118.0	740	2406	245	R 1″	1.5

35-1000 litres

■ Technical data

Reflex S
- For solar, heating and cooling water systems
- Vessel nominal volume 8-600 L
- For anti-freeze additive up to 50 %
- Permissible operating overpressure 10 bar
- Permissible operating temperature container/diaphragm 120 °C/70 °C
- Type S8-S33 for wall installation
- Type S50-S600 with feet

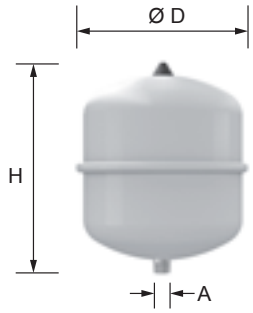

Type 10 bar/120 °C	Weight kg	Ø D mm	H mm	h mm	A	Pre-pressure bar
S 8	1.8	206	335	-	G ¾″	1.5
S 12	2.5	280	300	-	G ¾″	1.5
S 18	3.2	280	410	-	G ¾″	1.5
S 25	3.8	280	520	-	G ¾″	1.5
S 33	6.3	354	455	-	G ¾″	1.5
S 50	9.5	409	469	158	R ¾″	3.0
S 80	12.1	480	565	166	R 1″	3.0
S 100	14.2	480	670	166	R 1″	3.0
S 140	17.4	480	941	166	R 1″	3.0
S 200	35.6	634	758	205	R 1″	3.0
S 250	40.8	634	888	205	R 1″	3.0
S 300	47.0	634	1092	235	R 1″	3.0
S 400	61.0	740	1102	245	R 1″	3.0
S 500	72.0	740	1321	245	R 1″	3.0
S 600	87.0	740	1559	245	R 1″	3.0

Reflex
Diaphragm-type expansion chambers

Reflex F 18,24
- Flat-form vessel
- Permissible operating overpressure up to 3 bar
- Permissible operating temperature container/diaphragm 120 °C/70 °C

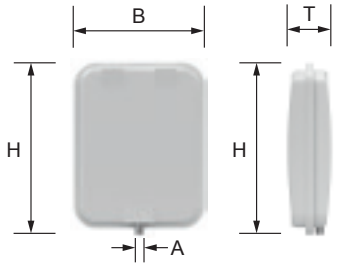

Type	Nom. volume Vn litres	Weight kg	H mm	B mm	T mm	A	Pre-pressure bar
F 18	18	8.7	444	350	158	G ¾″	1.0
F 24	24	9.4	444	350	180	G ¾″	1.0

Reflex C 18-80
- Wall vessel in disc shape, incl. wall holder
- For anti-freeze additive up to 50 %
- Permissible operating overpressure 3 bar
- Permissible operating temperature container/diaphragm 120 °C/70 °C

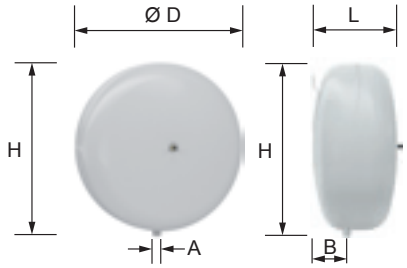

Type	Nom. volume Vn litres	Weight kg	Ø D mm	H mm	L mm	B mm	A	Pre-pressure bar
C 18	18	4.7	354	362	222	76	R ¾″	1.0
C 25	25	5.5	409	419	239	93	R ¾″	1.0
C 35	35	7.3	480	457	240	97	R ¾″	1.0
C 50	50	8.1	480	457	318	125	R ¾″	1.5
C 80	80	14.5	634	612	325	135	R ¾″	1.5

■ Technical data

Reflex V

- In-line vessel made of sheet steel from Reflex V 40 on feet
- Necessary for plants with return flow temperatures > 70 °C
- Can also be used as buffer chamber
- Permissible operating temperature 120 °C and for operating overpressure up to 10 bar

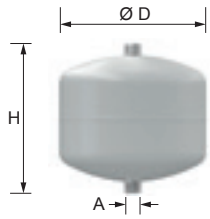

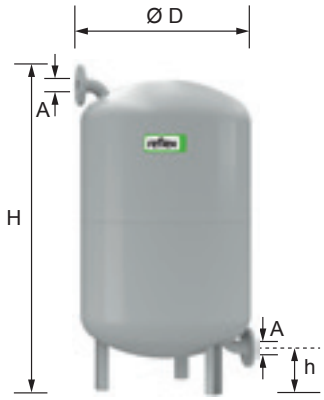

Type 10 bar/120 °C	Weight kg	Ø D mm	H mm	h mm	A
V 6	2.0	206	244	-	R ¾″
V 12	3.0	280	287	-	R ¾″
V 20	4.0	280	360	-	R ¾″
V 40	7.8	409	562	113	R 1″
V 60	23.0	409	732	172	R 1″
V 200	43.0	634	901	142	DN 40/PN 16
V 300	48.0	634	1201	142	DN 40/PN 16
V 350	51.0	640	1341	210	DN 40/PN 16

Reflex EB

- For separation of fine sludge particles, e.g. in old systems, and for protecting against deposits in heat generators.
- For installation in return flow
- For heating and cooling water systems
- For low system pressures
- Permissible operating overpressure EB 30-100, 10 bar
  EB 180-60, 6 bar
- Permissible operating temperature 120 °C

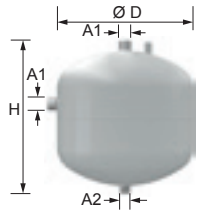

Selection

Sludge removal vessels are selected according to the throughflow volume according to the table below.

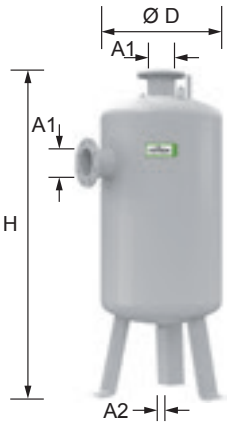

Type 10 bar/120 °C	Throughput V m³/h	Ø D mm	H mm	A1	A2	Weight kg
EB 30	2.5	409	455	R 1¼″	R 1″	11
EB 60	7.0	409	770	DN 50/PN 16	R 1″	22
EB 80	12.0	480	765	DN 65/PN 16	R 1″	30
EB 100	18.0	480	870	DN 80/PN 16	R 1″	34

Type 6 bar/120 °C	Throughput V m³/h	Ø D mm	H mm	A1	A2	Weight kg
EB 180	30.0	600	1100	DN 100/PN 6	R 1″	76
EB 300	44.0	600	1600	DN 125/PN 6	R 1″	103
EB 400	64.0	750	1500	DN 150/PN 6	R 1″	133
EB 750	175.0	750	2215	DN 250/PN 6	R 1″	225

Description

Silt trap

- Type Rp ½″, ¾″, 1″, 1¼″, 1½″, 2″
- Casing made of brass, PN 16
- Max. operating pressure 16 bar
- Max. operating temperature 110 °C
- Sieve made of stainless steel, size of mesh 0.5 mm

Delivery
- Silt trap packed and supplied separately

Sludge separator with magnet

- Type CS 20 - ¾″, CS 25 - 1″, CS 32 - 1¼″, CS 40 - 1½″, CS 50 - 2″
- Housing made of plastic PPA with diffuser and partial flow removal with 4 extra-strong Neodymium magnets
- Magnets removable for draining
- EPP insulation 20 mm
- Connections made of brass
  - Type CS 20 - G ¾″
  - Type CS 25 - G 1″
  - Type CS 32 - G 1¼″
  - Type CS 40 - G 1½″
  - Type CS 50 - G 2″
- Drain made of brass: hose connection
- Any installation orientation - 360° rotating
- Temperature range -10 to 120 °C
- Max. operating pressure: 10 bar
- Max. glycol fraction: 50 %

Delivery
- Sludge separator delivered separately packed

Heating system filling station

- Type: FS-BA15-¾″
- For permanent connection with the heating plant according to DIN EN 1717 with DIN DVGW approval, consisting of: lock, system separator BA, pressure reducer, silt trap, pressure gauge, drain funnel
- Connection fittings ¾″
- Max. operating pressure: 10 bar
- Min. input pressure: 1.5 bar
- Output pressure: 0.5-4 bar
- Drainage funnel: DN 40
- Pressure drop: 1.1 bar
- Max. filling capacity: 1270 l/h
- Max. entry temperature: 30 °C
- Max. outlet temperature: 65 °C

Delivery
- Filling station packed and supplied separately

Description

Water level limiter

The water level limiting device 933 incorporates the magnetic transmission of the float movement to a micro-switch which enables a check to be made without lowering the water level. The electrical switching unit can be rotated by 360° and replaced without the need to drain the plant.
The water level limiting device 933.1 locks on being switched off. When the interruption has been removed, the plant can be reactivated with the help of the release button on the device.

• Operating overpressure max.	10 bar
• Operating temperature max.	120 °C
• Fuse type	IP 65 according to DIN 40050
• Micro-switch	two-way contact 1 pin
• Installation position	main axis vertical
• Power-handling capacity	10 (3) A/250 V
• Component approval number	TÜV-HWB-01-190
• Registration number	10074

Part No.

Fittings			Part No.

Silt trap
Casing made of brass, PN 16
Max. operating temperature 110 °C
Sieve made of stainless steel,
size of mesh 0.5 mm

	Connection	kv value	
DN 15 - ½″	G 1/2″	4.5	2046 974
DN 20 - ¾″	G 3/4″	7	2046 976
DN 25 - 1″	G 1″	7.8	2046 978
DN 32 - 1¼″	G 1 1/4″	15	2046 980
DN 40 - 1½″	G 1 1/2″	21	2046 982
DN 50 - 2″	G 2″	34	2046 984

Sludge separator with magnet
Housing made of plastic PPA with diffuser and partial flow removal with 4 extra-strong Neodymium magnets
Magnets removable for draining
EPP insulation 20 mm
Connections made of brass
Drain made of brass: hose connection
Any installation orientation - 360° rotating
Temperature range -10 to 120 °C
Max. operating pressure: 10 bar
Max. glycol fraction: 50 %

Type	Connection	Flow rate m³/h	Flow speed m/s	
CS 20	G ¾″	0.4 - 1.0	1.0	2063 734
CS 25	G 1″	1.0 - 2.0	1.0	2063 735
CS 32	G 1¼″	2.0 - 3.0	1.0	2063 736
CS 40	G 1½″	3.0 - 5.0	1.0	2063 737
CS 50	G 2″	5.0 - 8.0	1.0	2063 738

Automatic quick release air vent ⅜″ 2052 976
with cut-off valve

Automatic quick release air vent ½″ 2002 582
with cut-off valve

Part No.

	Part No.
Filling group FS-BA15-¾″ for stationary connection with the heating plant according to DIN EN 1717 with DIN DVGW approval Casing made of brass Consisting of lock, system separator BA, pressure reducer, silt trap, pressure gauge, drain funnel incl. connection fittings ¾″ Max. operating pressure: 10 bar Min. inlet pressure: 1.5 bar Outlet pressure: 0.5-4 bar Drain funnel: DN 40 Pressure drop: 1.1 bar Max. filling capacity: 1270 l/h Max. entry temperature: 30°C Max. outlet temperature: 65°C	6017 054

Safety set
Complete with safety valve (3 bar), Pressure gauge and autom. aspirator with shut-off valve. Connection inner thread

DN 15 - 1″, range of application to 50 kW	641 184
DN 20 - 1″, range of application to 100 kW	6014 390
DN 25 - 1″, range of application to 200 kW	6018 709
DN 32 - 1¼″, range of application to 350 kW	6018 710

Syr water level limiter
The water level limiting device 933 incorporates the magnetic transmission of the float movement to a micro-switch which enables a check to be made without lowering the water level. The electrical switching unit can be rotated by 360° and replaced without the need to drain the plant.
The water level limiting device 933.1 locks on being switched off. When the interruption has been removed, the plant can be reactivated with the help of the release button on the device.

Syr water level limiter 933.1 with locking	2000 117

Syr water level limiter

• Operating overpressure max.	10 bar
• Operating temperature max.	120 °C
• Fuse type	IP 65 according to DIN 40050
• Micro-switch	two-way contact 1 pin
• Installation position	main axis vertical
• Power-handling capacity	10 (3) A/250 V
• Component approval number	TÜV-HWB-01-190
• Registration number	10074

Technical data/dimensions

Sludge separator with magnet
(Dimensions in mm)

- Type CS 20 - ¾″, CS 25 - 1″, CS 32 - 1¼″, CS 40 - 1½″, CS 50 - 2″
- Housing made of plastic PPA with diffuser and partial flow removal with 4 extra-strong Neodymium magnets
- Magnets removable for draining
- EPP insulation 20 mm
- Connections made of brass
  - Type CS 20 - G ¾″
  - Type CS 25 - G 1″
  - Type CS 32 - G 1¼″
  - Type CS 40 - G 1½″
  - Type CS 50 - G 2″
- Drain made of brass: hose connection
- Any installation orientation - 360° rotating
- Temperature range -10 to 120 °C
- Max. operating pressure: 10 bar
- Max. glycol fraction: 50 %

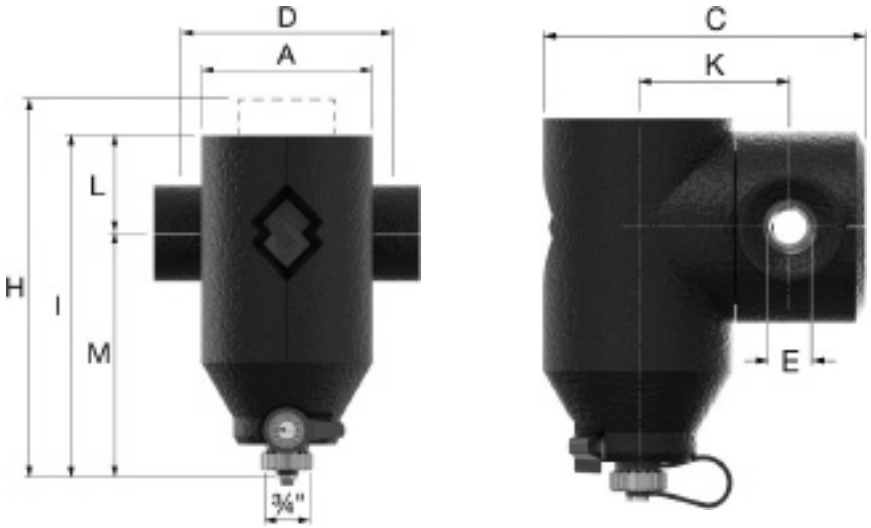

Type	Connection E	Dimensions A mm	C mm	D mm	K mm	L mm	M mm	H mm	I mm	Weight kg
CS 20	G ¾″	97	164	100	78	56	140	216	196	1.01
CS 25	G 1″	112	189	106	91	63	178	255	241	1.21
CS 32	G 1¼″	112	199	110	96	63	178	255	241	1.37
CS 40	G 1½″	131	224	129	109	73	212	300	285	1.88
CS 50	G 2″	131	237	285	117	73	212	300	285	2.32

Selection diagram - pressure drop

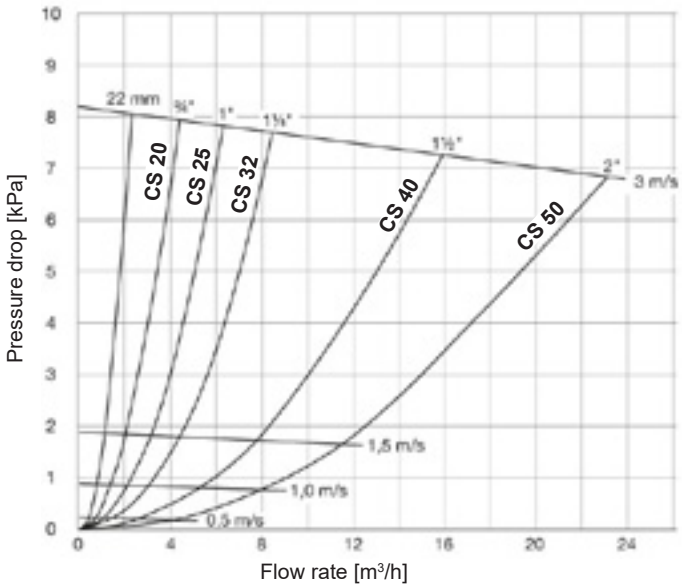

Technical data/dimensions

Heating system filling station
(Dimensions in mm)

- Type: FS-BA15-¾″
- For permanent connection with the heating plant according to DIN EN 1717 with DIN DVGW approval, consisting of:
  lock, system separator BA, pressure reducer, silt trap, pressure gauge, drain funnel
- Connection fittings ¾″
- Max. operating pressure: 10 bar
- Min. input pressure: 1.5 bar
- Output pressure: 0.5-4 bar
- Drainage funnel: DN 40
- Pressure drop: 1.1 bar
- Max. filling capacity: 1270 l/h
- Max. entry temperature: 30 °C
- Max. outlet temperature: 65 °C

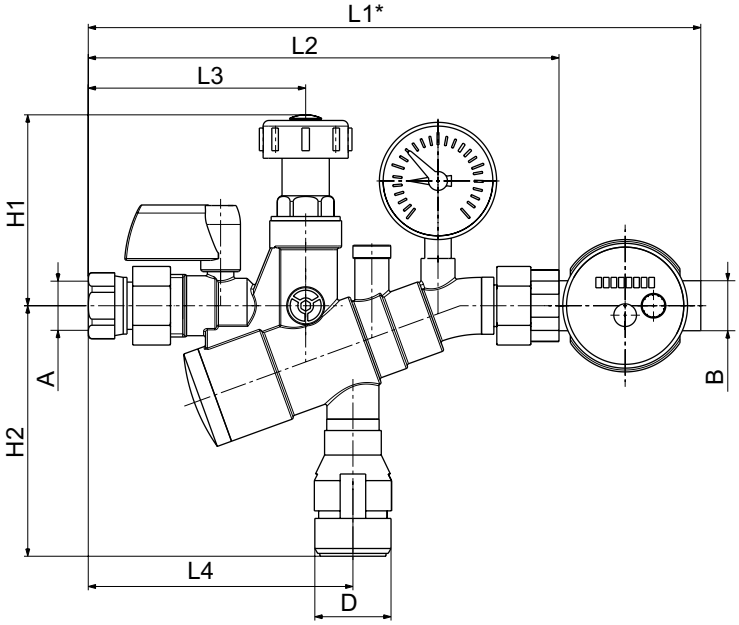

Type	A	B	D	L1	L2	L3	L4	H1	H2
FS-BA15-¾″	Rp ¾″ internal	R ¾″ external	40	324	249	115	140	101	133

Part No.

Diaphragm safety valve
The diaphragm safety valve type 1915 is designed to protect closed heating systems from over pressurisation according to DIN EN 12828. The connection size of the valve is to be determined in accordance with the capacity of the heat generator to be protected. The maximum operating pressure of the installation and the corresponding maximum response pressure of the safety valve must be observed. The valve is equipped with a separate seat seal ahead of the diaphragm. The valve can be lifted by means of a twist grip. Its body is made of high-quality, low-lead brass alloy (DN 15-DN 32) resp. low-lead red brass alloy resistant to dezincification (DN 40-DN 50). Spring cap, diaphragm and other interior parts are made of highly heat-proof and non-ageing rubbery-elastic synthetic material. The spring is made of corrosion resistant spring steel wire. Max. admissible temperature 120 °C.

Type	G1/DN 1 entry side	G2/DN 2 exit side	Response pressure	Part No.
1915-1″ 3 bar	1″	DN 32 - 1¼″	3 bar	2034 775
1915-1″ 4 bar	1″	DN 32 - 1¼″	4 bar	2034 352
1915-1″ 5 bar	1″	DN 32 - 1¼″	5 bar	2034 777
1915-1″ 6 bar	1″	DN 32 - 1¼″	6 bar	2034 365
1915-1″ 8 bar	1″	DN 32 - 1¼″	8 bar	2034 776
1915-1″ 10 bar	1″	DN 32 - 1¼″	10 bar	2034 778
1915-1¼″ 4 bar	1¼″	DN 40 - 1½″	4 bar	2034 780
1915-1¼″ 6 bar	1¼″	DN 40 - 1½″	6 bar	2034 782
1915-1½″ 6 bar	1½″	DN 50 - 2″	6 bar	2034 353
1915-1½″ 10 bar	1½″	DN 50 - 2″	10 bar	2034 798
1915-2″ 6 bar	2″	DN 65 - 2½″	6 bar	2034 364

Technical data/dimensions

Safety valves on heat generators
acc. to DIN EN 12828, TRD 721***

Code letter H, blow-off pressure pSV 2.5 and 3.0 bar for heat generator output levels ≤ 900

G1/G2	½-¾	¾-1	1-1¼	1¼-1½	1½-2	2-2½
pSV/bar	Blow-off power/kW					
2.5	≤ 50	≤ 100	≤ 200	≤ 350	≤ 600	≤ 900
3.0						

Code letter D/G/H, for heat generator output levels > 900 kW [1)]

DN 1/DN 2	20 x 32	25 x 40	32 x 50	40 x 65	50 x 80 [4)]	65 x 100	80 x 125	100 x 150	125 x 200	150 x 250
pSV/bar	Blow-off line/kW									
2.5	198	323	514	835	1291	2199	3342	5165	5861	9484
3.0 [2)]	225	367	583	948	1466 [3)]	2493	3793	5864	6654	10824
3.5	252	411	652	1061	1640	2790	4245	6662	7446	12112
4.0	276	451	717	1166	1803	3067	4667	7213	8185	13315
4.5	302	492	782	1272	1966	3344	5088	7865	8924	14518
5.0	326	533	847	1377	2129	3621	5510	8516	9663	15720
5.5	352	574	912	1482	2292	3898	5931	9168	10403	16923
6.0	375	612	972	1580	2443	4156	6322	9773	11089	18040
7.0	423	690	1097	1783	2757	4690	7135	11029	12514	20359
8.0	471	769	1222	1987	3071	5224	7948	12286	13941	22679
9.0	519	847	1346	2190	3385	5759	8761	13542	15366	24998
10.0	563	920	1462	2378	3676	6253	9514	14705	16686	27146

Legend:

G1/G2	Dimension in inches inlet/outlet safety valve
DN 1/DN 2	Dimension in DN inlet/outlet safety valve
pSV	Response pressure safety valve in bar
Blow-off line	Dimension inlet, outlet safety valve in DN or G (thread in inch)
kW	Maximum output in kW heat generator

*** Safety valves must:**
- have a minimum diameter of DN 15.
- open at a pressure that does not exceed the maximum configuration pressure of the system and must be capable of preventing the maximum operating pressure from being exceeded by more than 10 %, although exceeding the level by 0.5 bar is permitted if the maximum operating pressures are not more than 3 bar.

Example:

1) Hoval UltraGas® 1000, max. system pressure 2.5 bar.
according to the output (1000 kW), a valve with code letters D/G/H must be selected

2) Selection of response pressure for safety valve (pSV), generally pSV - 0.5 bar or 3 bar 10 % of system pressure *
in the example max. system pressure 2.5 bar + 0.5 bar = 3 bar.

3) Selection of boiler output/in example 1000 kW.

4) Selection of blow-off power, i.e. inlet and outlet dimension of safety valve.

Part No.

Pressure switch
The pressure switch DFC 17B76 F001 is used for monitoring and limiting the pressure in liquids. The robust, splash-proof, light-alloy casing and the vibration-proof snap switch enable the monitor to be used in heavy-duty applications. The product is tested to VdTÜV, pressure 100/1 and, therefore, are also suitable for use in steam-boiler (TRD604) and hot-water installations (DIN 4751). The upper and lower switching points can be set separately. The pressure sensor is made of brass for non-aggressive media.

Setting range	Min. switching difference		Max. value sensor	Weight	Part No.
0...10 bar	0.5 bar	40 bar	70 °C	1.1 kg	2024 278

Boiler fill and drain valve URS 1372
Heavy model with external, cap and chain, without key, made of brass, max. operating temperature 90 °C, max. operating pressure 10 bar.

Type	Operating temperature	Operating pressure	Connection	Part No.
URS 1372	90 °C	10 bar	½″	240 219

Reduction sleeve for drain valve
ATUSA reduction sleeve No. 240 black, malleable cast iron fitting with internal thread.

Type	Connection	Part No.
No. 240	1½″-½″	2029 767

Boiler type		1″-½″	1½″-½″	2″-½″
Uno-3	(50-90)	●		
Uno-3	(110-125)	●		
Uno-3	(160-360)		●	
Max-3	(420-2700)		●	
Max-3 plus	(420-2700)		●	

Part No.

Pressure gauge
Pressure gauge with adjustable red-branded needle, adjustable at the dial, split bar, diameter 80 mm, connection vertical ½″.

Operating pressure	Connection	Diameter	Part No.
0...6.0 bar	½″	80 mm	2029 769
0...10.0 bar	½″	80 mm	2000 118

Push-button cock for pressure gauge
Push-button cock made of brass, nickel-plated, max. working temperature 100 °C, max. working pressure 25 bar.

Operating pressure	Operating temperature	Connection	Part No.
25 bar	100 °C	½″	2024 276

Thermometer
Thermometer TBH 80, casing made of stainless steel 1.4301, sight glass made of normal glass, error margin class 1 DIN 16203, diameter 80 mm.
Accessories: screw-in- and shrink-wrap sheath tube. Use for insulated tubes up to max. 2″ (60.3 mm).

Type	Length mm	Part No.
0-100 °C	88	2029 770

Welding bush
Welding bush TBH, for thermometer TBH, made of steel

Length mm	Part No.
88	2025 204

Thermometer type TMOV 2002 059
including immersion sleeve ½″
0 - 120 °C

Description

Hydraulic switches with deaerator MHK..., MH...

- Air and gas separator with dirt and mud backstop, for permanent degassing and clearing of the heating medium of mud
- With hydraulic switch for the isolation of the delivered flows in the boiler
- Welded pressure vessel made of steel
- Cleaning opening in the soil
- Exhaust automat with automatic shut-off valve
- Casing inclusive insulation

Hydraulic switches with deaerator MHK (25), MHK (32)

- Welded pressure vessel made of steel with connecting pieces, screwcaps and seals
- Cleaning opening in the soil
- Exhaust automat with automatic shut-off valve
- Casing inclusive insulation

Hydraulic switches with deaerator MH (40) up to MH (200)

- Welded round pressure vessel made of steel with connecting pieces, inclusive Victaulic flanges
- Cleaning opening in the soil
- Exhaust automat with automatic shut-off valve
- Fitting ½″ for the temperature sensor in the cover
- Rinsing and emptying device 1″ on the soil and the cover
- Foot which is in the height adjustable for fastening to the soil
- Casing inclusive insulation

■ **Part No.**

Hydraulic switches with deaerator — Part No.

MHK (25), MHK (32)

Completely insulated and encased, inclusive screwcaps and seals (suitable for Hoval module wall separator). Exhaust automat with automatic shut-off and emptying mechanism in the soil.

Hydraulic switches type	
MHK (25)	242 880
MHK (32)	242 881

MH (40) - MH (200)
Completely insulated and encased, inclusive Victaulic flanges, ½" fitting for the temperature sensor, exhaust automat with automatic shut-off valve, rinsing and emptying device on the soil and the cover.

Hydraulic switches type	Flange DN	Connection pipe Victaulic DN	
MH (40)	40	50	6032 313
MH (50)	50	50	6032 314
MH (65)	65	80	6032 307
MH (80)	80	80	6032 308
MH (100)	100	100	6032 315
MH (125)	125	150	6032 310
MH (150)	150	150	6032 311
MH (200)	200	200	6032 312

Technical data

Hydraulic switch MHK (25,32), MH (40-65)

Type		(25)	(32)	(40)	(50)	(65)
• Output at Δt = 20 K	kW	50	70	135	135	280
• Delivery	m³/h	2	3	6	6	8
• Pressure drops				see flow characteristic		
• Connection dimension		Rp 1½″	Rp 2″	DN 40/PN 6	DN 50/PN 6	DN 65/PN 6
• Cleaning opening		1″	1″	2″	2″	2″
• Emptying mechanism		1″	1″	1″	1″	1″
• Rinsing system		-	-	1″	1″	1″
• Sleeve with immersion pocket for temperature sensor		-	-	½″	½″	½″
• Sleeve for magnetite separator		2 x ¾″	2 x ¾″	4 x ¾″	4 x ¾″	4 x ¾″
• Operating/test pressure	bar	6/9	6/9	6/9	6/9	6/9
• Max. operating temperature	°C	110	110	110	110	110

Hydraulic switch MH (80-200)

Type		(80)	(100)	(125)	(150)	(200)
• Output at Δt = 20 K	kW	280	700	1150	1150	2300
• Delivery	m³/h	12	20	30	50	100
• Pressure drops				see flow characteristic		
• Connection dimension		80/PN 6	100/PN 6	125/PN 6	150/PN 6	200/PN 6
• Cleaning opening		2″	2″	2″	2″	2″
• Emptying mechanism		1″	1″	1″	1″	1″
• Rinsing system		1″	1″	1″	1″	1″
• Sleeve with immersion pocket for temperature sensor		½″	½″	½″	½″	½″
• Sleeve for magnetite separator		4 x ¾″	4 x ¾″	4 x ¾″	4 x ¾″	4 x ¾″
• Operating/test pressure	bar	6/9	6/9	6/9	6/9	6/9
• Max. operating temperature	°C	110	110	110	110	110

Technical data

Flow characteristic
Hydraulic switches MHK (25), MHK (32)

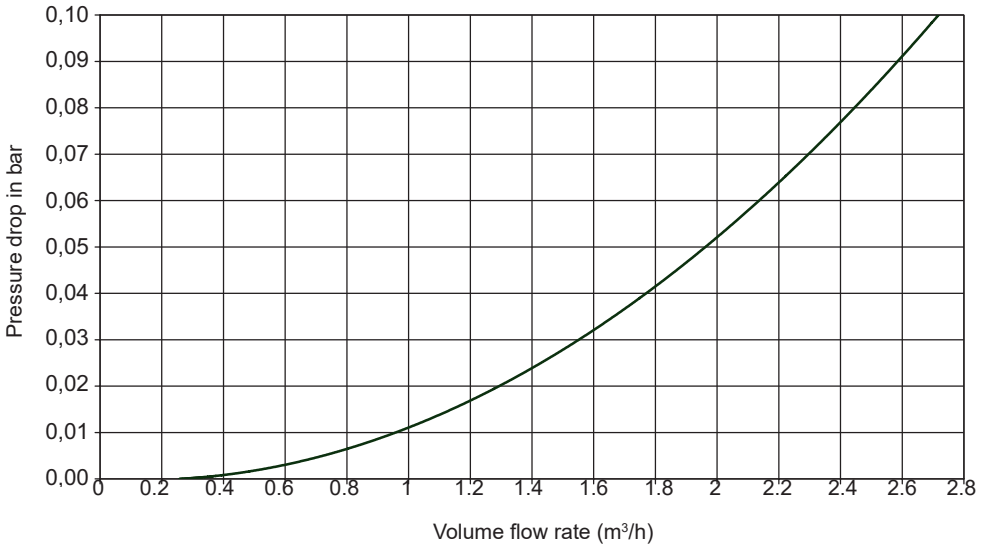

Flow characteristic
Hydraulic switches MH (40) to MH (200)

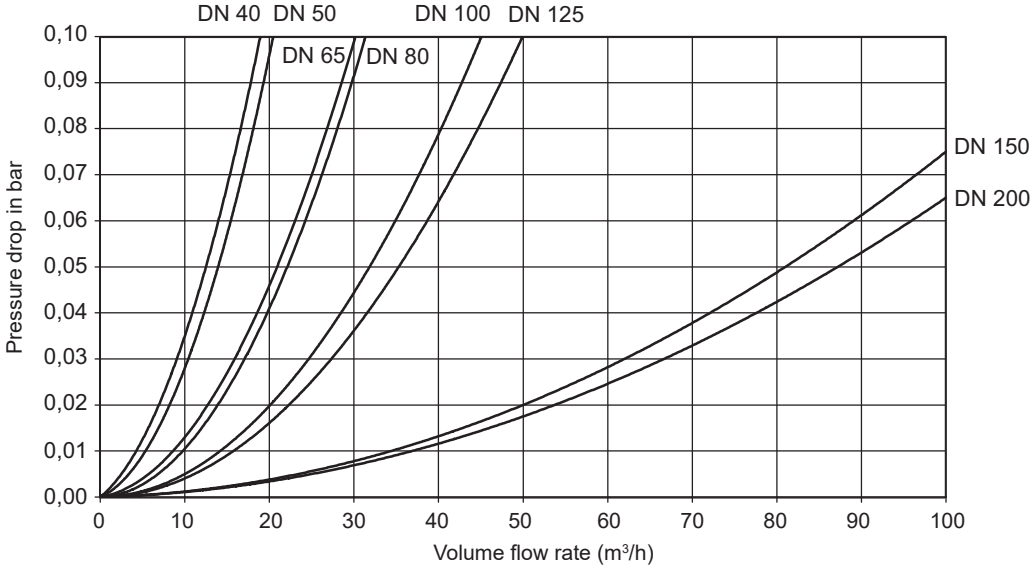

Dimensions

Dimensions
Hydraulic switches MHK (25), MHK (32)

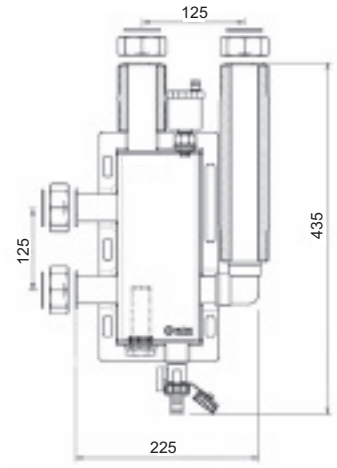

Dimensions
Hydraulic switches MH (40) to MH (200)

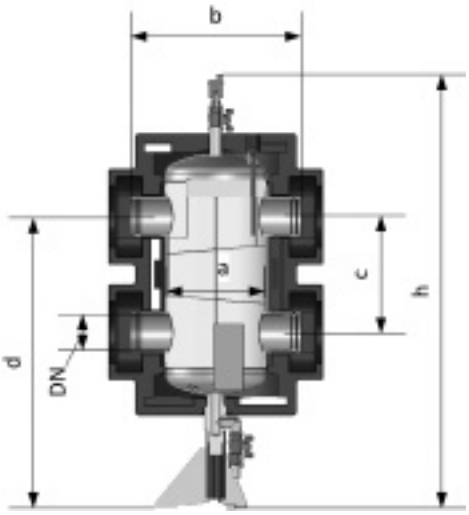

Type	a	b	c	d (min.)	e	f	g	h (min.)
(40)	220	382	225	680	138	40	60.3	1040
(50)	220	382	225	680	138	50	60.3	1040
(65)	220	382	225	680	138	65	88.9	1040
(80)	220	382	225	680	142	80	88.9	1040
(100)	300	500	340	860	195	100	114.3	1280
(125)	300	500	340	860	300	125	168.3	1280
(150)	420	660	450	1005	198	150	168.3	1460
(200)	420	660	450	1005	205	200	219.1	1460

Connection technology
Hydraulic switches MHK (25), MHK (32)

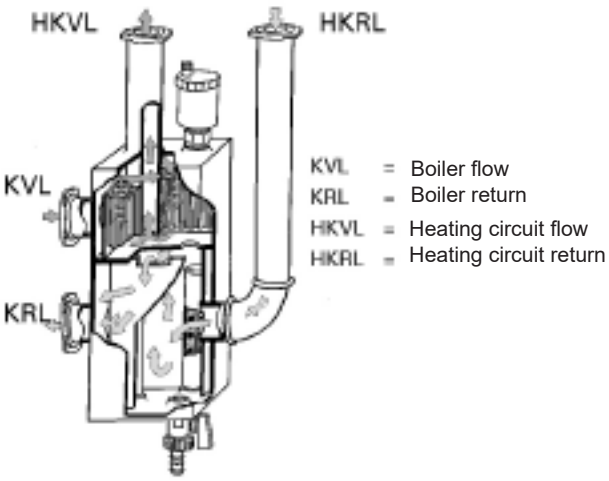

Connection technology
Hydraulic switches MH (40) to MH (200)

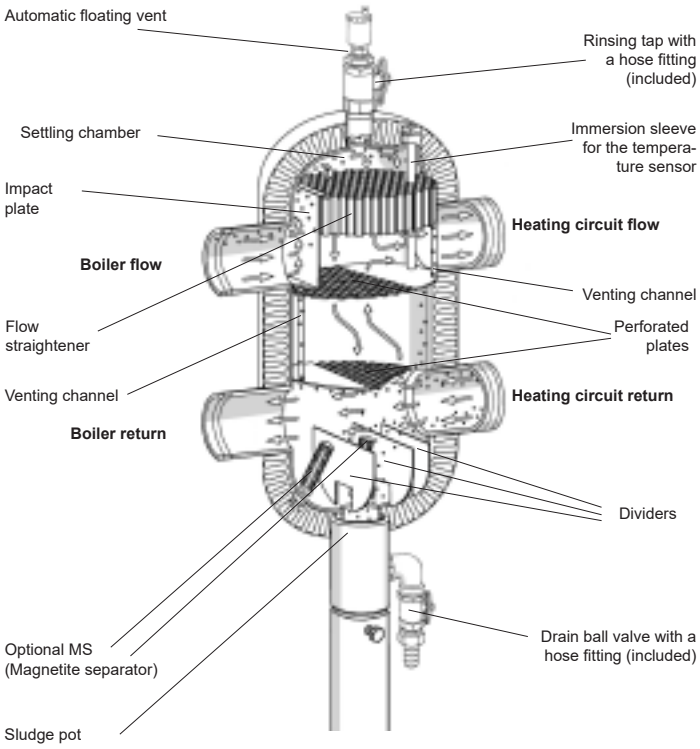

Example

Uno-3

Oil/gas boiler with
- main pump
- return temperature control (continuous)
- hydraulic switch
- calorifier
- 1 direct circuit + 1-... mixer circuit(s)

Hydraulic schematic BEEE030

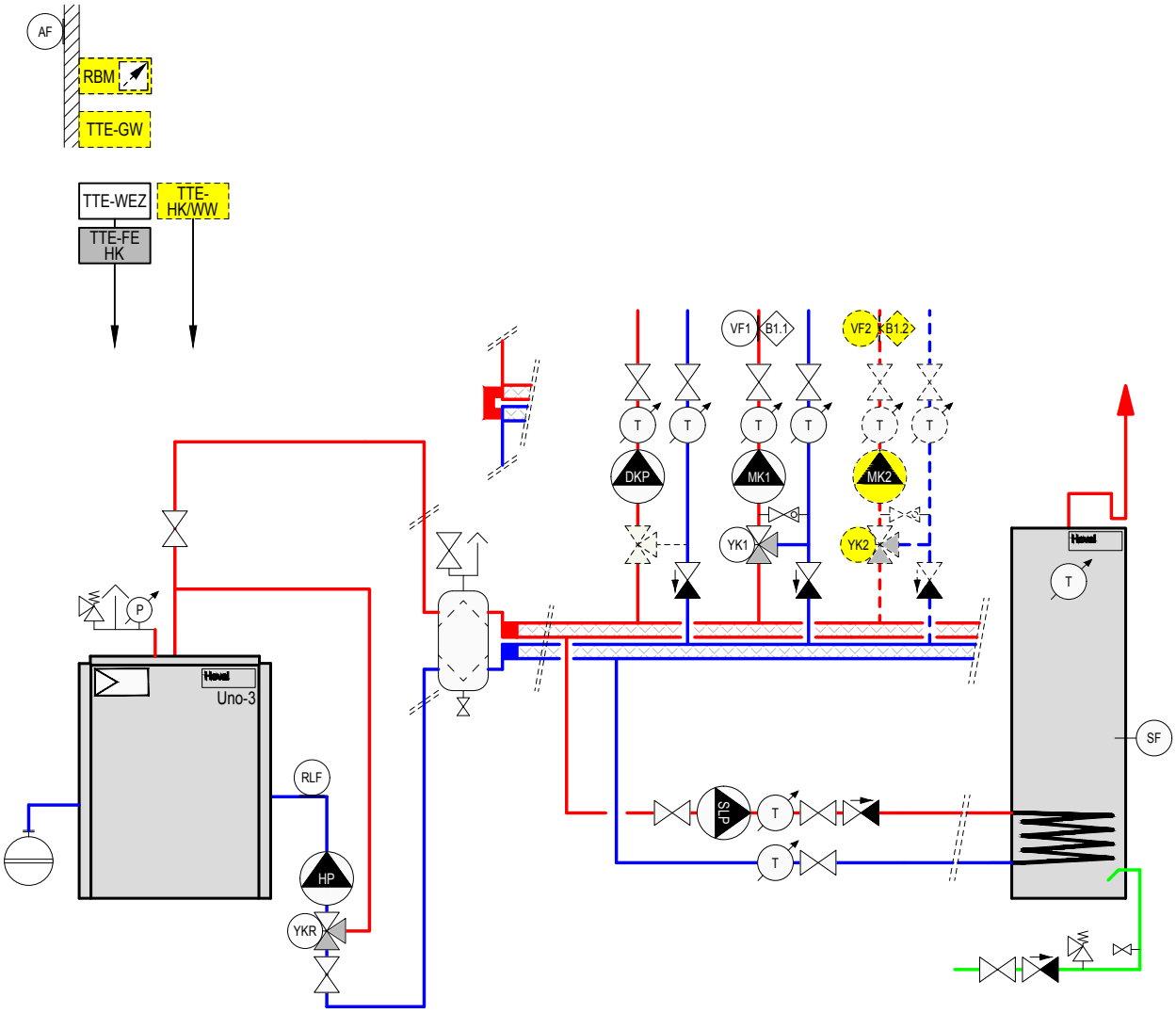

TTE-WEZ	TopTronic® E basic module heat generator (installed)
VF1	Flow temperature sensor 1
B1.1	Flow temperature guard (if required)
MK1	Pump mixer circuit 1
YK1	Actuator mixer 1
RLF	Return sensor
HP	Main pump
DKP	Pump for heating circuit without mixer
YKR	Actuator return mixer
SLP	Calorifier charging pump
SF	Calorifier sensor
Option	
RBM	TopTronic® E room control module
TTE-GW	TopTronic® E Gateway
TTE-FE HK	TopTronic® E module expansion heating circuit
TTE-HK/WW	TopTronic® E heating circuit/DHW module
VF2	Flow temperature sensor 2
B1.2	Flow temperature guard (if required)
MK2	Pump mixer circuit 2
YK2	Actuator mixer 2

Notice:
- This hydraulic schematic is a principle schematic. It does not contain all details for installation. The installation must be done according to local conditions, dimensioning and regulations.
- With underfloor heating a flow temperature monitor must be built in.
- Shut-off devices to the safety valve (pressurised expansion tank, safety valve, etc.) are to safe against unintended closing!
- Mount bags to prevent single pipe gravity circulation!

Part No.

Swiss Association for
Technical Inspections

Boiler inspection
Pressure test certificate issued by the independent authority “Swiss Association for Technical Inspections” (ASIT). If you should need a pressure test certificate, please contact your area manager.

Article	Pressure test certificate	
Modul-plus	ASIT acceptance	on request
Boiler < 3000 kW	ASIT acceptance	on request
Boiler > 3000 kW	ASIT acceptance	on request

Page

Glandless pumps

Heating, air-conditioning, cooling

Pump speed control	
Δp-v	Differential pressure variable
	Control signal / interface
Δp-c	Differential pressure constant
	Constant speed
	Application Temperature limit -10 °C
	Solar application
DN 15-30	Threaded connection
DN 32-100	Flange connection

Page

Domestic hot water

Pump speed control	
Δp-v	Differential pressure variable
	Control signal / interface
Δp-c	Differential pressure constant
	Constant speed
DN 15-30	Threaded connection
DN 32-100	Flange connection

Product overview and range of application

Glandless pumps	High-efficiency pumps			High-efficiency premium pumps		
Use	Heating, air-conditioning, cooling					
	Hoval system pump set SPS-S	**Hoval system pump set SPS-I**	**Hoval system pump set SPS-I**	**Hoval HSP**	**Stratos PICO plus**	**Stratos**
Nominal diameter	DN 15-30	DN 25,30	DN 32,40	DN 15-30	DN 15-30	DN 25,30
Rated pressure	PN 10	PN 10	PN 10	PN 6	PN 10	PN 10
						
Qmax	4 m³/h	10 m³/h	10 m³/h	3.5 m³/h	4 m³/h	9 m³/h
Hmax	8 m	12 m	12 m	6 m	6 m	10 m
Type of regulation						
Δp-c (constant)	●	●	●	●	●	●
Δp-v (variable)	●	●	●	●	●	●
Constant speed	●	-	-	-	- [1]	●
Pump control	internal	internal or external	internal or external	internal	internal	internal or external with module
Interface	-	Analogue 0-10V, PWM1, PWM2	Analogue 0-10V, PWM1	-	-	Modular concept for connecting all conventional bus systems (e.g. Modbus, BACnet, CANopen, LON, PLR)
Display Watt / function	- / LED	-	-	LED / LED	LC display	
Motor: frequency	1x230 V, 50/60 Hz					
Electrical connection	Set incl. cable 2.0 m and Molex plug	incl. cable 1.5 m	incl. cable 1.5 m	Molex plug/ Connector	Connector	Screwed cable glands
Separate power relay with direct connection via 230 V required (applies to all TTE controller modules and module expansions)	NO	NO	NO	NO	NO	NO
Air evacuation function	●	-	-	-	●	-
Thermal insulation jacket	●	●	●	●	●	●
Medium temperature	-10 °C... +95 °C	-10 °C... +110 °C	-10 °C... +110 °C	-10 °C... +95 °C	+2 °C... +110 °C	-10 °C...+110 °C
Max. permitted total hardness	-	-	-	-	-	-
Pipe connections	Thread					
EEI	from ≤ 0.20	≤ 0.23	≤ 0.23	≤ 0.20	from ≤ 0.16	≤ 0.20
Accessories						
Screw fittings/flanges	●	●	○	○	○	○
Seals	●	●	●	●	●	●
Washers for flange screws	-	-	-	-	-	-
Compensation pieces	○	○	○	○	○	○
Angled plug/cable					○	-
IR stick	-	-	-	-	-	○
IR monitor	-	-	-	-	-	○
IF modules	-	-	-	-	-	Modbus, BACnet, CANopen, LON, PLR, DP, Ext. Off, Ext. Min., SBM, Ext. Off/SBM

● Included ○ Accessories/option

[1] Dynamic Adapt

Product overview and range of application

Glandless pumps	High-efficiency premium pumps		High-efficiency pumps		
Use	Heating, air-conditioning, cooling		Domestic hot water		
	Stratos	**Stratos D**	**Hoval system pump set SPS-Z**	**Stratos PICO-Z**	**Stratos-Z**
Nominal diameter	DN 32-100	DN 32-80	DN 15-30	DN 25	DN 30,40
Rated pressure	PN 6/10, PN 6, PN 10		PN 10	PN 10	PN 10
					
Qmax	109 m³/h	109 m³/h	2.5 m³/h	3.5 m³/h	41 m³/h
Hmax	16 m	16 m	7 m	6 m	12 m
Type of regulation Δp-c (constant)	●	●	●	●	●
Δp-v (variable)	●	●	●	-	●
Constant speed	●	●	●	-	-
Pump control	internal or external with module		internal	internal	internal or external with module
Interface	Modular concept for connecting all conventional bus systems (e.g. Modbus, BACnet, CANopen, LON, PLR)		-	-	Modular concept for connecting all conventional bus systems (e.g. Modbus, BACnet, CANopen, LON, PLR)
Display Watt / function	LC display		- / LED	LC display	
Motor: frequency	1 x 230 V, 50/60 Hz				
Electrical connection	Screwed cable glands		Set incl. cable 2.0 m and Molex plug	Connector	Screwed cable glands
Separate power relay with direct connection via 230 V required (applies to all TTE controller modules and module expansions)	see technical data	see technical data	NO	NO	NO
Air evacuation function	-	-	-	●	●
Thermal insulation jacket	●	○	●	●	●
Medium temperature	-10 °C...+110 °C		0 °C...+70 °C	+2 °C...+70 °C	0 °C...+80 °C
Max. permitted total hardness	-	-	35.7° fH =20° dH	35.7° fH =20° dH	35.7° fH =20° dH
Pipe connections	Flange		Thread		Thread / Flange
EEI	≤ 0.20	≤ 0.23	-	-	-
Accessories					
Screw fittings/flanges	○	○	●	○	○
Seals	-	-	●	●	-
Washers for flange screws	DN 32-65	DN 32-65	-	-	DN40
Compensation pieces	○	○	○	○	○
Angled plug/cable	-	-		●	-
IR stick	○	○	-	-	○
IR monitor	○	○	-	-	○
IF modules	Modbus, BACnet, CANopen, LON, PLR, DP, Ext. Off, Ext. Min., SBM, Ext. OFF/SBM		-	-	Modbus, BACnet, CANopen, LON, PLR, DP, Ext. Off, Ext. Min., SBM, Ext. Off/SBM

● Included ○ Accessories/option

Interface modules for Stratos, Stratos-D, Stratos-Z

Interfaces for TopTronic® E

IF module Ext. Off/SBM
Retrofittable module with control input “Priority Off”, collective operating message and double pump interface for communication with additional IF module Stratos Ext. Off/SBM.

IF module Ext. off
Retrofittable module with control input “Priority Off”, control input 0-10 V and double pump interface for communication with additional IF module Stratos PLR.

IF module SBM
Retrofittable module with collective operating message “COM”, control input 0-10 V and double pump interface for communication with additional IF module Stratos SBM.

IF module Ext. Min.
Retrofittable module with control input “Priority Min.” (lowering operation without autopilot), control input 0-10 V and double pump interface for communication with additional IF module Stratos PLR.

Interfaces for building automation

IF module Modbus RTU
Retrofittable module with serial, digital interface Modbus RTU for connection to a BUS system RS-485 and double pump interface for communication with additional IF module Stratos DP.

IF module LON
Retrofittable module with serial, digital interface LON for connection to LONWorks networks and double pump interface for communication with additional IF module Stratos PLR.

IF module CANopen
Retrofittable module with serial, digital interface CANopen for connection to a BUS system CAN and double pump interface for communication with additional IF module Stratos DP.

IF module BACnet MS/TP
Retrofittable module with serial, digital interface BACnet MS/TP for connection to a BUS system RS-485 and double pump interface for communication with additional IF module Stratos DP.

IF module PLR
Retrofittable module with serial, digital interface PLR for connection to the building automation GA via on-site coupling modules and double pump interface for communication with additional IF module Stratos PLR.

Double pump management (Modbus, BACnet, CANopen)

IF module DP
Retrofittable module for connecting through bus interfaces and for double pump communication.

Notice
Detailed product information
see Engineering

Description

Hoval system pump set SPS-S

ErP READY — APPLIES TO EUROPEAN DIRECTIVE FOR ENERGY RELATED PRODUCTS

- High-efficiency pump PARA electronically controlled
- Maintenance-free glandless circulating pump with screwed connection, blocking-current proof synchronous motor using ECM technology and built-in electronic power control for variable differential pressure control
- Suitable for all heating, ventilation and solar applications (see Technical data)
- Preselectable control modes for optimum load adjustment:
  - Δp-c (differential pressure constant)
  - Δp-v (differential pressure variable)
  - n-const (constant speed)
- LED display of the operating state
- Display of fault messages
- Automatic deblocking function
- High starting torque
- Air evacuation function for venting the rotor space
- Electrical connection without tools by Molex connection system
- Pump housing made of grey cast iron with cataphoretic dip coating, impeller made of polypropylene, stainless steel shaft with metal-impregnated carbon friction bearings
- Thermal insulation jacket made of EPP

Δp-v	Differential pressure variable
Δp-c	Differential pressure constant
n-const	Constant speed

Motor
Voltage 1 x 230 V, frequency 50/60 Hz
Protection class IP X4D
Insulation class F
Integrated motor protection

Medium temperature
at max. ambient temperature
+40 °C: -10 °C... +95 °C

Connections
DN 15 - DN 30
With external thread including seals and fittings

Design on request
Compensation pieces for adapting the installation length with replacement pumps see chapter “Type comparison”

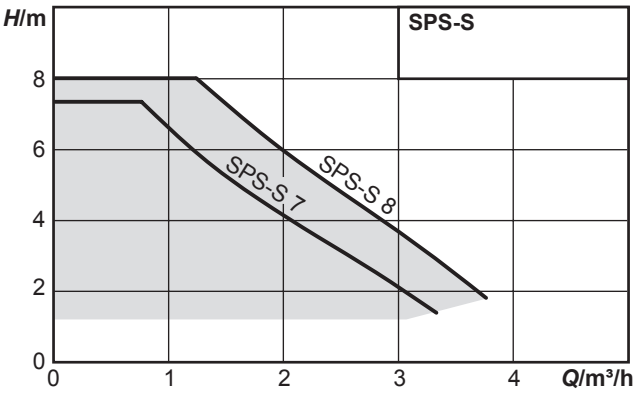

■ **Part No.**

Hoval system pump set SPS-S
with external thread including fittings

Part No.

- High-efficiency pump PARA, colour black, with operating mode switch and LED
- Electric set, cable 2.0 m and plug
- Including seals and screw fittings or pump adapter set (brass)
- Thermal insulation jacket

Medium temperature 0 °C...+95 °C

Type key

Example	**SPS-S 15/7 130 SMO**
SPS-S	High-efficiency pump standard
15	Nominal diameter
7	Delivery head (mWC)
130	Overall length (mm)
SMO	Molex connection system

Type	Nominal diameter DN	Delivery head mWC	Overall length mm	Electrical connection	Connection G	Rated pressure PN	EEI ≤	Part No.
SPS-S [1]	15	7	130	SMO	1″	10	0.20	6049 463
SPS-S [2]	25	7	130	SMO	1½″	10	0.20	6049 464
SPS-S [1]	25	7	180	SMO	1½″	10	0.20	6049 465
SPS-S [2]	30	7	170	SMO	2"	10	0.20	6049 466
SPS-S [1]	30	7	180	SMO	2″	10	0.20	6049 467
SPS-S [1]	15	8	130	SMO	1″	10	0.20	6049 468
SPS-S [2]	25	8	130	SMO	1½″	10	0.20	6049 469
SPS-S [1]	25	8	180	SMO	1½″	10	0.20	6049 470
SPS-S [2]	30	8	170	SMO	2″	10	0.20	6049 471
SPS-S [1]	30	8	180	SMO	2″	10	0.20	6049 472

[1] Screw fittings
[2] Pump adapter set (without screw fittings)

Accessories

Connection set
Connection set for pumps consisting of 2 ball valves brass incl. seals

Type	Pump connection	Screw connection	
AS20-KH	G 1″	R 1″	6032 100
AS25-KH	G 1½″	Rp 1″	6041 180
AS32-KH	G 2″	Rp 1¼″	6041 912

Screw fittings grey cast iron
2 fittings
Version grey cron GTW yellow chromated
incl. seals

Type	G	Rp	
VSV21	1½″	1″	6007 004
VSV31	2″	1¼″	6022 618

Technical data / Pump curves

SPS-S 15/7, 25/7, 30/7

Pump curves

Δp-c (constant)

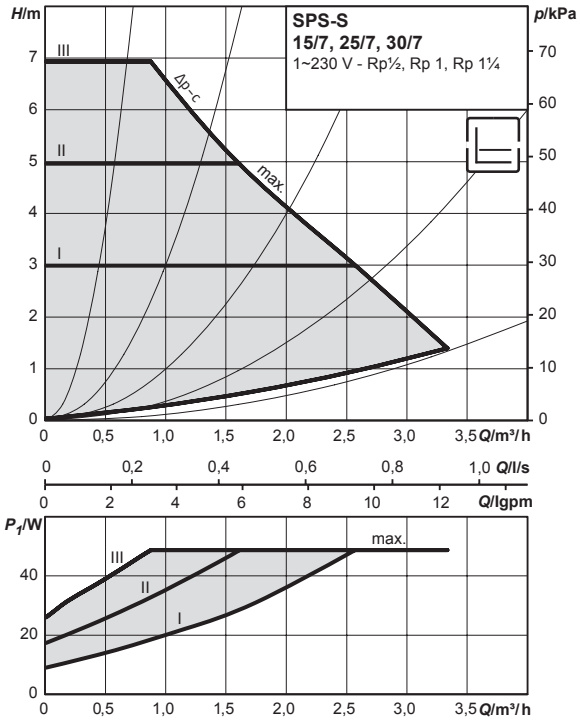

Pump curves

Δp-v (variable)

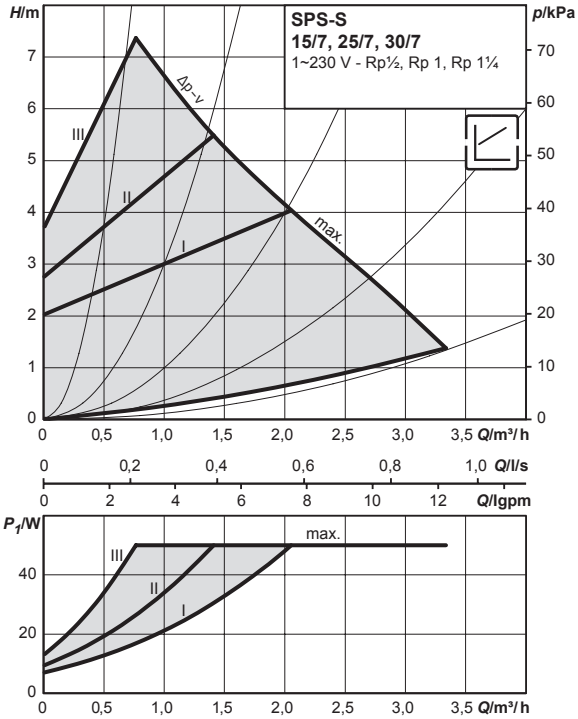

Pump curves

Constant speed

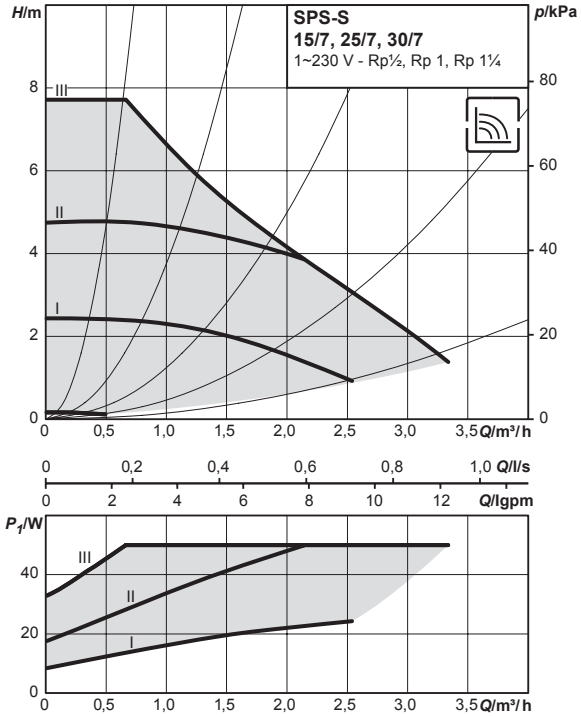

Technical data / Pump curves

Dimension drawing

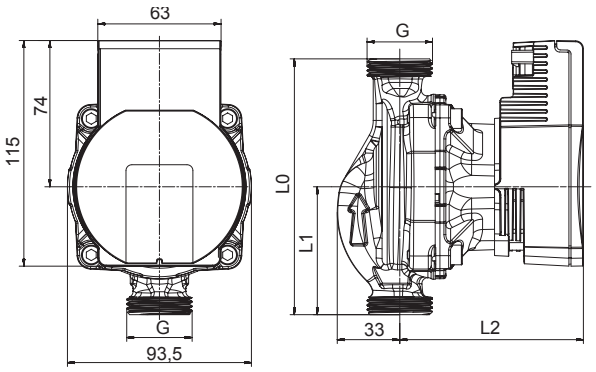

Type	Threaded pipe union	Thread	Overall length			Weight approx.
		G	*L0* mm	*L1* mm	*L2* mm	*m* kg
15/7-130	Rp ½	G 1	130	65	94	1.54
25/7-130	Rp 1	G 1½	130	65	94	1.66
25/7-180	Rp 1	G 1½	180	90	94	1.78
30/7-170	Rp 1¼	G 2	170	85	94	1.78
30/7-180	Rp 1¼	G 2	180	90	94	1.96

Terminal diagram (Notice: pump pre-wired)

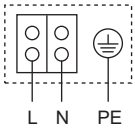

Blocking current-proof motor
Single-phase motor (EM) 2-pole - 1~230 V, 50 Hz

Technical data	
Rated pressure	PN 10
Mains connection	1~230 V, 50/60 Hz
Speed *n*	2580 - 4700 1/min
Power consumption P_1	8 - 50 W
Current consumption / Starting current	0.07 - 0.43 A / <3 A
Separate power relay with direct connection via 230 V required (applies to all TTE controller modules and module expansions)	NO
Minimum suction head at 50 / 95 °C	0.5 / 4.5 m
Materials	
Pump housing	Grey cast iron KTL (cataphoretic dip coating)
Impeller	Plastic (PP - 40 % GF)
Pump shaft	Stainless steel
Bearing	Carbon, metal impregnated
Approved fluids (other fluids on request)	
Heating water (acc. to Hoval engineering guidelines resp. VDI 2035)	
Water-glycol mixtures (max. 1:1; above 20 % admixture, the pumping data must be checked)	
Permitted field of application	
Temperature range at max. ambient temperature +40 °C	-10 °C...+95 °C

■ Technical data / Pump curves

SPS-S 15/8, 25/8, 30/8

Pump curves

Δp-c (constant)

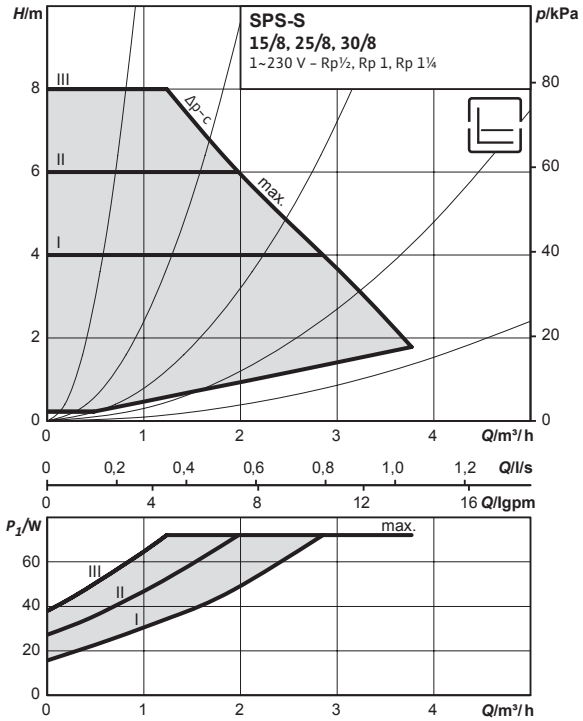

Pump curves

Δp-v (variable)

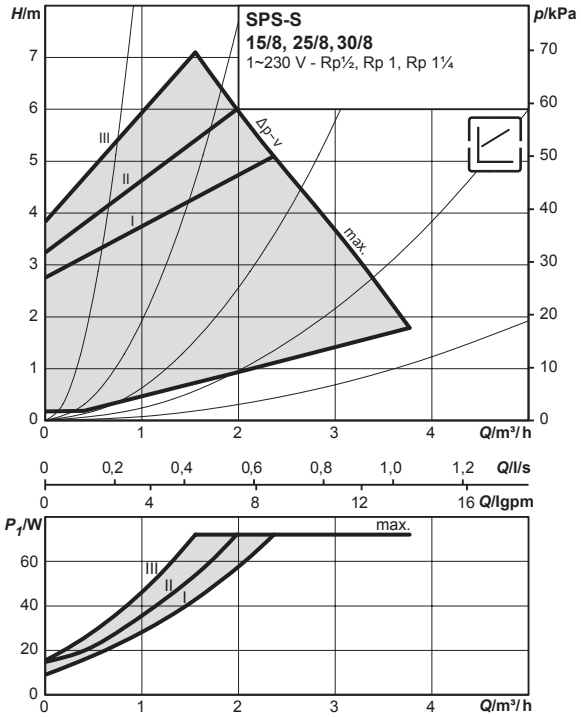

Pump curves

Constant speed

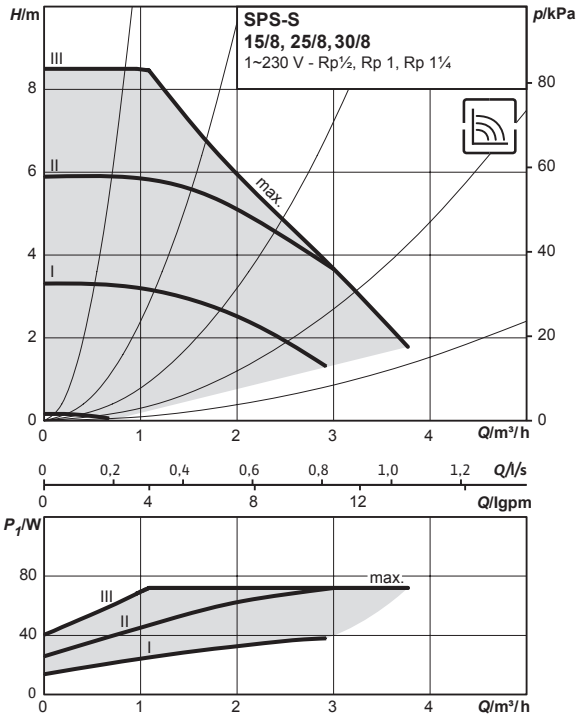

Technical data / Pump curves

Dimension drawing

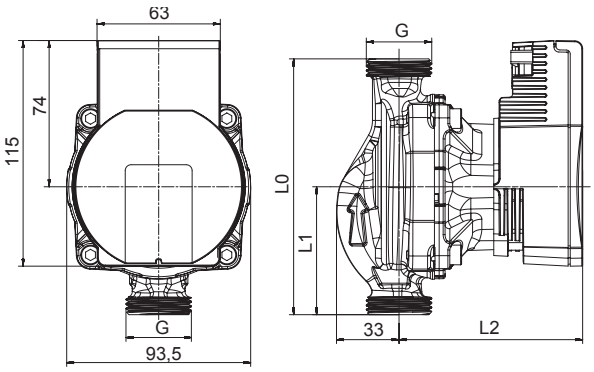

Type	Threaded pipe union	Thread	Overall length			Weight approx.
		G	*L0* mm	*L1* mm	*L2* mm	*m* kg
15/8-130	Rp ½	G 1	130	65	105	1.70
25/8-130	Rp 1	G 1½	130	65	105	1.80
25/8-180	Rp 1	G 1½	180	90	105	2.00
30/8-170	Rp 1¼	G 2	170	90	105	2.10
30/8-180	Rp 1¼	G 2	180	90	105	2.10

Terminal diagram (Note: pump pre-wired)

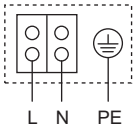

Blocking current-proof motor
Single-phase motor (EM) 2-pole - 1~230 V, 50 Hz

Technical data	
Rated pressure	PN 10
Mains connection	1~230 V, 50/60 Hz
Speed *n*	3000 - 4800 1/min
Power consumption P_1	10 - 75 W
Current consumption / Starting current	0.03 - 0.66 A / <3 A
Separate power relay with direct connection via 230 V required (applies to all TTE controller modules and module expansions)	NO
Minimum suction head at 50 / 95 °C	0.5 / 4.5 m
Materials	
Pump housing	Grey cast iron KTL (cataphoretic dip coating)
Impeller	Plastic (PP - 40 % GF)
Pump shaft	Stainless steel
Bearing	Carbon, metal impregnated
Approved fluids (other fluids on request)	
Heating water (acc. to Hoval engineering guidelines resp. VDI 2035)	
Water-glycol mixtures (max. 1:1; above 20 % admixture, the pumping data must be checked)	
Permitted field of application	
Temperature range at max. ambient temperature +40 °C	-10 °C...+95 °C

Description

Hoval system pump set SPS-I with interface

- High-efficiency pump Stratos PARA electronically controlled
- Maintenance-free glandless circulating pump with screwed connection, blocking-current proof synchronous motor using ECM technology and built-in electronic power control for variable differential pressure control
- Suitable for all heating, ventilation and solar applications (see Technical data)
- With interface analog 0-10 V or PWM1 (heating) or PWM2 (solar)
- Preselectable control modes for optimum load adjustment:
  - Δp-c (differential pressure constant)
  - Δp-v (differential pressure variable)
- Collective fault signal CFS
- Automatic deblocking function
- High starting torque
- Mains and control cable 1.5 m firmly wired up to the pump
- Electrical accessories “Quickon” line connector, Rast5 plug and shrink-fit sleeve
- Pump housing made of grey cast iron with cataphoretic dip coating, impeller made of polypropylene, stainless steel shaft with metal-impregnated carbon friction
- Thermal insulation jacket made of EPP

Motor
Voltage 1x230 V, frequency 50/60 Hz
Protection class IP X4D
Insulation class F
Integrated motor protection

Medium temperature
at max. ambient temperature
+25 °C: -10 °C...+110 °C
+40 °C: -10 °C...+90 °C

Connections
DN 25 - DN 30
With external thread including seals and fittings

Design on request
Compensation pieces for adapting the installation length with replacement pumps see chapter “Type comparison”

Δp-v	Differential pressure variable
	Control signal / interface
Δp-c	Differential pressure constant

Notices
- If the pump needs to be controlled, take care to make the correct signal selection. The interfaces for pump control are permanently installed and cannot be changed subsequently.
- The pump can also be used without external pump control. The signal cable must be cut off on site and sealed with the supplied shrink-fit sleeve. The pump can “only” still be operated in Δp-v (variable) or Δp-c (constant)

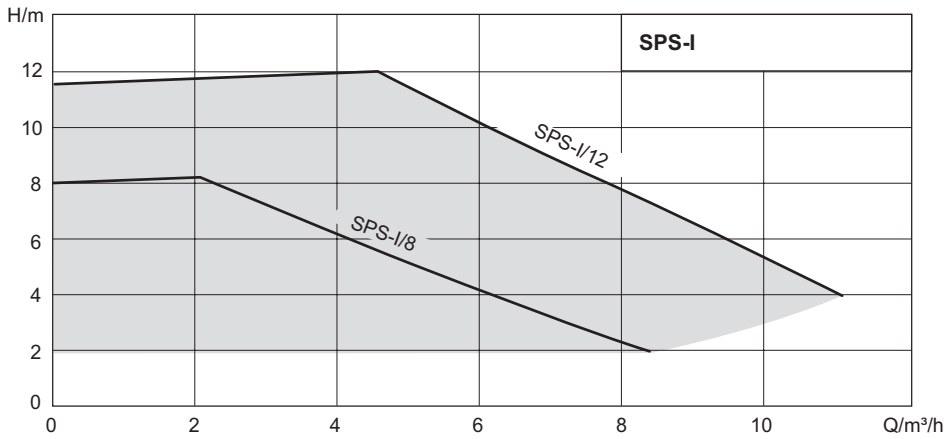

■ **Part No.**

Hoval system pump set SPS-I with interface for pump control
with external thread including fittings

Part No.

- High-efficiency pump Stratos PARA, colour black, with operating mode switch red
- with analogue interface 0-10V or PWM1 (heating) or PWM2 (solar)
- Mains and control cable 1.5 m firmly wired up to the pump
- Electrical accessories “Quickon” line connector, Rast5 plug and shrink-fit sleeve
- including seals and fittings (brass)
- Thermal insulation jacket

Medium temperature -10 °C...+110 °C

Type	Nominal diameter DN	Delivery head mWC	Overall length mm	Integrated function [1]	Connection G	Rated pressure PN	EEI ≤	Part No.
SPS-I	25	8	130	0-10V	1½″	10	0.23	6040 949
SPS-I	25	8	130	PWM1	1½″	10	0.23	6040 950
SPS-I	25	8	180	0-10V	1½″	10	0.23	6040 951
SPS-I	25	8	180	PWM1	1½″	10	0.23	6040 952
SPS-I	25	8	180	PWM2	1½″	10	0.23	6040 953
SPS-I	25	12	180	0-10V	1½″	10	0.23	6040 954
SPS-I	25	12	180	PWM1	1½″	10	0.23	6040 955
SPS-I	30	8	180	0-10V	2″	10	0.23	6040 956
SPS-I	30	8	180	PWM1	2″	10	0.23	6040 957
SPS-I	30	12	180	0-10V	2″	10	0.23	6040 958
SPS-I	30	12	180	PWM1	2″	10	0.23	6040 959
SPS-I	30	12	180	PWM2	2″	10	0.23	6040 960

[1] Type plate identification T
T2 = 0-10 V
T22/T10 = PWM 1 (heating)
T24 = PWM 2 (solar)

Type key

Example	**SPS-I 25/8 130 0-10V**
SPS-I	High-efficiency pump with interface
25	Nominal diameter
8	Delivery head (mWC)
130	Overall length (mm)
0-10V	interface

Notices
- If the pump needs to be controlled, take care to make the correct signal selection. The interfaces for pump control are permanently installed and cannot be changed subsequently.
- The pump can also be used without external pump control. The signal cable must be cut off on site and sealed with the supplied shrink-fit sleeve. The pump can “only” still be operated in Δp-v (variable) or Δp-c (constant)

Accessories

Connection set
Connection set for pumps consisting of 2 ball valves brass incl. seals

Type	Pump connection	Screw connection	
AS25-KH	G 1½″	Rp 1″	6041 180
AS32-KH	G 2″	Rp 1¼″	6041 912

Technical data / Pump curves

SPS-I 25/8, 30/8

Pump curves

External signal via PWM

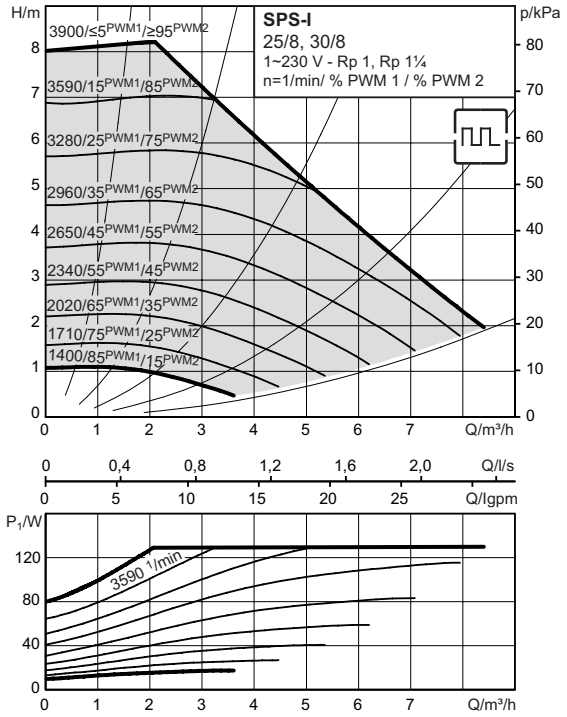

Pump curves

External control signal via analogue input 0-10 V

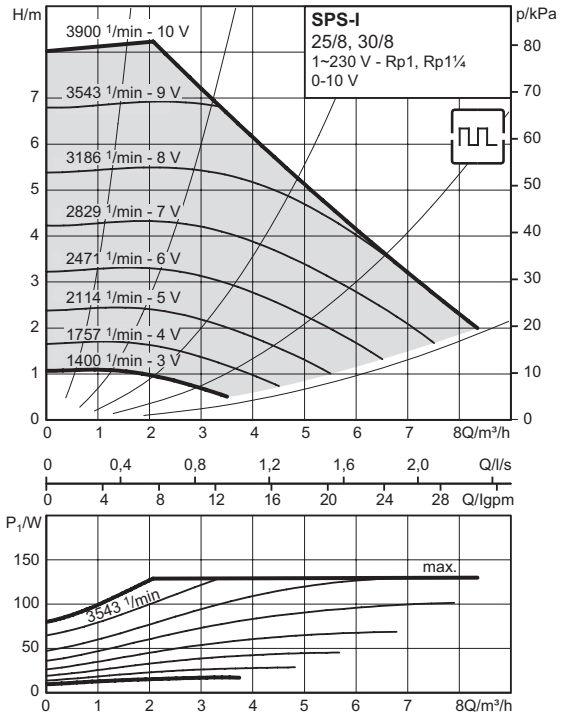

Pump curves

Δp-c (constant)

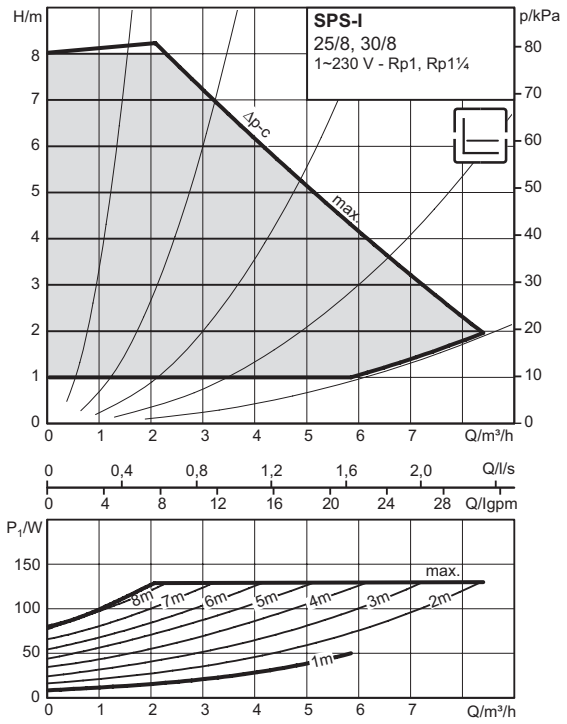

Pump curves

Δp-v (variable)

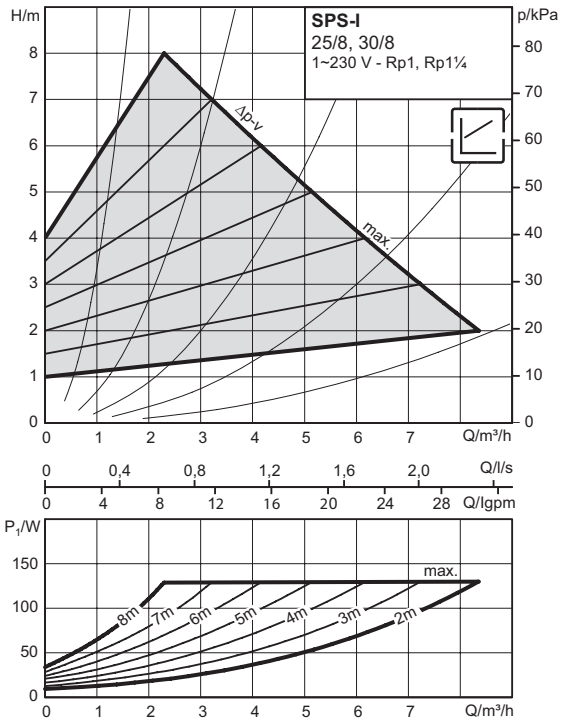

Technical data / Pump curves

Dimension drawing

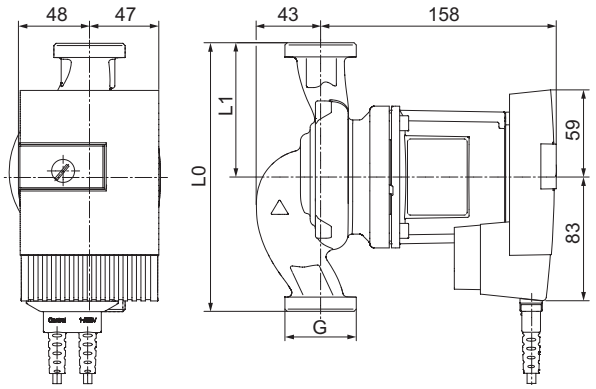

Type	Threaded pipe union	Thread	Overall length		Weight approx.
		G	*L0* mm	*L1* mm	*m* kg
25/8-130	Rp 1	G 1½	130	65	4.7
25/8	Rp 1	G 1½	180	90	4.7
30/8	Rp 1¼	G 2	180	90	4.7

Terminal diagram (Notice: pump pre-wired)

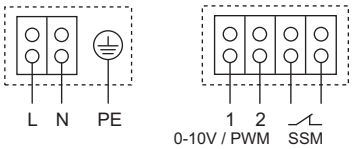

Blocking current-proof motor
Single-phase motor (EM) 2-pole - 1~230 V, 50 Hz

Technical data	
Rated pressure	PN 10
Mains connection	1~230 V, 50/60 Hz
Speed *n*	1400 - 3900 1/min
Power consumption P_1	8 - 130 W
Current consumption / Starting current [1]	0.07 - 0.95 A / 8 A
Separate power relay with direct connection via 230 V required (applies to all TTE controller modules and module expansions)	NO
Minimum suction head at 50 / 95 / 110 °C	3 / 10 / 16 m

Materials	
Pump housing	Grey cast iron KTL (EN-GJL-200)
Impeller	Plastic (PP - 40 % GF)
Pump shaft	Stainless steel (1.4034)
Bearing	Carbon, metal impregnated

Approved fluids (other fluids on request)

Heating water
(acc. to Hoval engineering guidelines resp. VDI 2035)

Water-glycol mixtures (max. 1:1; above 20 % admixture, the pumping data must be checked)

Permitted field of application	
Temperature range at max. ambient temperature +25 °C	-10 °C...+110 °C
Temperature range at max. ambient temperature +40 °C	-10 °C...+90 °C

[1] Note starting current

Technical data / Pump curves

SPS-I 25/12, 30/12

Pump curves

External signal via PWM

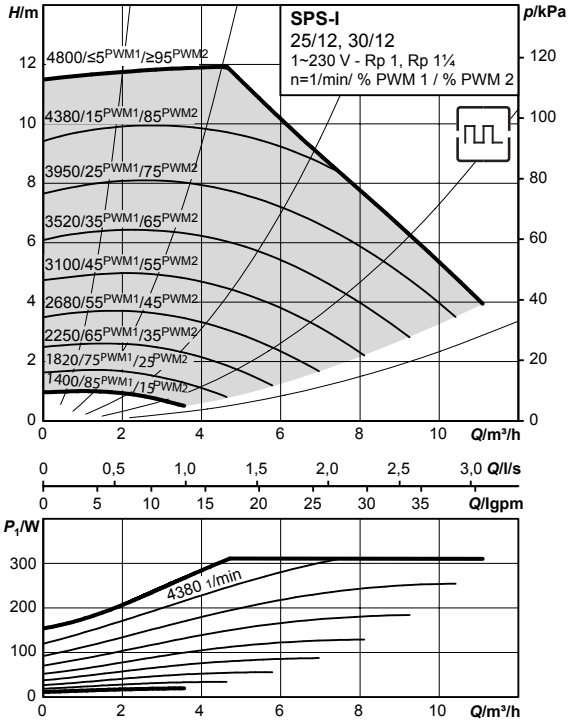

Pump curves

External control signal via analogue input 0-10 V

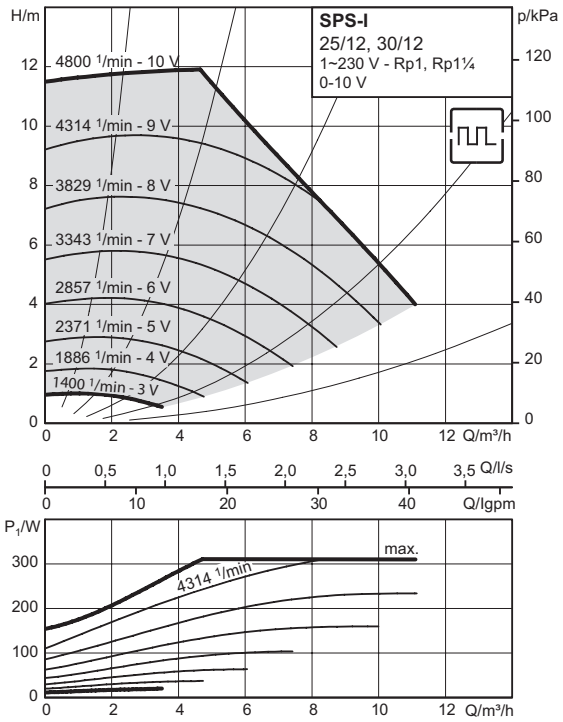

Pump curves

Δp-c (constant)

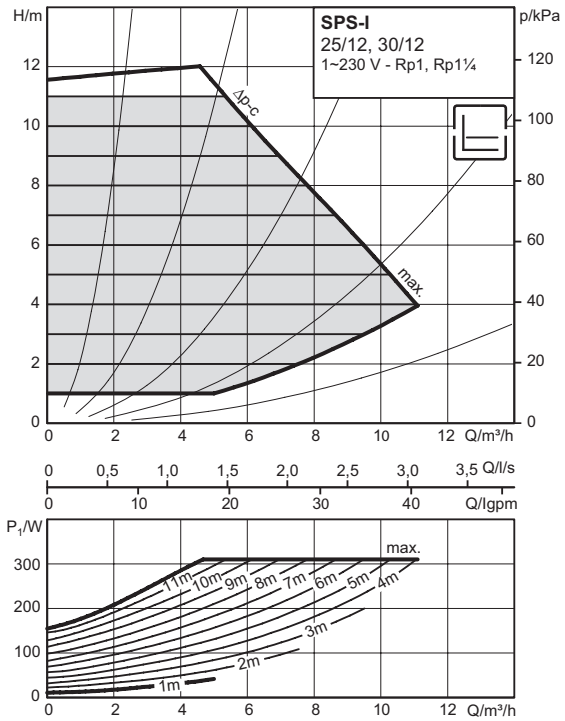

Pump curves

Δp-v (variable)

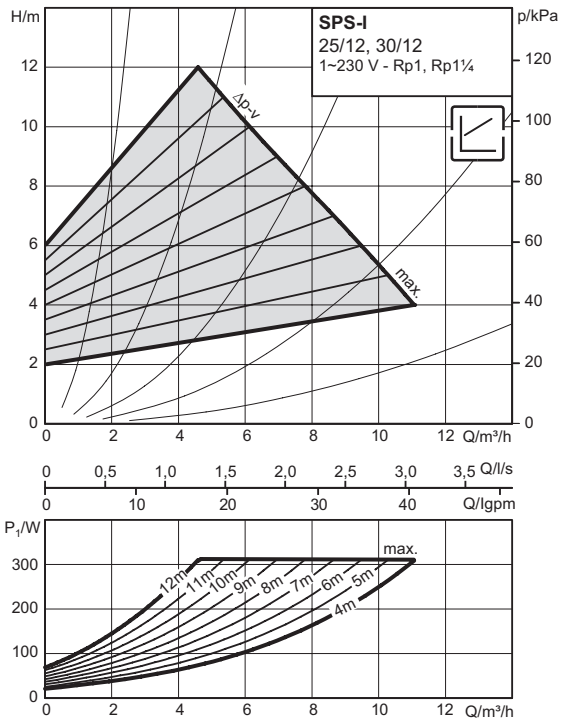

Technical data / Pump curves

Dimension drawing

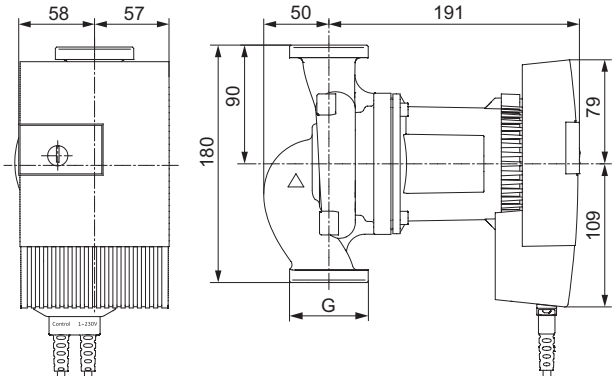

Type	Threaded pipe union	Thread	Overall length	Weight approx.
		G		*m*
			mm	kg
25/12	Rp 1	G 1½	180	6.2
30/12	Rp 1¼	G 2	180	6.2

Terminal diagram (Notice: pump pre-wired)

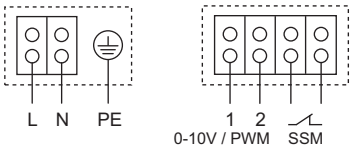

Blocking current-proof motor
Single-phase motor (EM) 2-pole - 1~230 V, 50 Hz

Technical data	
Rated pressure	PN 10
Mains connection	1~230 V, 50/60 Hz
Speed *n*	1400 - 4800 1/min
Power consumption P_1	16 - 310 W
Current consumption / Starting current [1]	0.16 - 1.37 A / 8 A
Separate power relay with direct connection via 230 V required (applies to all TTE controller modules and module expansions)	NO
Minimum suction head at 50 / 95 / 110 °C	3 / 10 / 16 m
Materials	
Pump housing	Grey cast iron KTL (EN-GJL-200)
Impeller	Plastic (PP - 40 % GF)
Pump shaft	Stainless steel (1.4034)
Bearing	Carbon, metal impregnated
Approved fluids (other fluids on request)	
Heating water (acc. to Hoval engineering guidelines resp. VDI 2035)	
Water-glycol mixtures (max. 1:1; above 20 % admixture, the pumping data must be checked)	
Permitted field of application	
Temperature range at max. ambient temperature +25 °C	-10 °C...+110 °C
Temperature range at max. ambient temperature +40 °C	-10 °C...+90 °C

[1] Note starting current

Description

Hoval system pump set SPS-I with interface

- High-efficiency pump Stratos PARA electronically controlled
- Maintenance-free glandless circulating pump with screwed connection, blocking-current proof synchronous motor using ECM technology and built-in electronic power control for variable differential pressure control
- Suitable for all heating, ventilation and solar applications (see Technical data)
- With interface analog 0-10 V or PWM1 (heating)
- Preselectable control modes for optimum load adjustment:
  - Δp-c (differential pressure constant)
  - Δp-v (differential pressure variable)
- Collective fault signal CFS
- Automatic deblocking function
- High starting torque
- Mains and control cable 1.5 m firmly wired up to the pump
- Electrical accessories “Quickon” line connector, Rast5 plug and shrink-fit sleeve
- Pump housing made of grey cast iron with cataphoretic dip coating, impeller made of polypropylene, stainless steel shaft with metal-impregnated carbon friction
- Thermal insulation jacket made of EPP

Motor
Voltage 1x230 V, frequency 50/60 Hz
Protection class IP X4D
Insulation class F
Integrated motor protection

Medium temperature
at max. ambient temperature
+25 °C: -10 °C...+110 °C
+40 °C: -10 °C...+90 °C

Connections
DN 32, 40 with flange connections without counter flanges, screws and seals

Design on request
Compensation pieces for adapting the installation length with replacement pumps see chapter “Type comparison”

Δp-v	Differential pressure variable
	Control signal / interface
Δp-c	Differential pressure constant

Notices
- If the pump needs to be controlled, take care to make the correct signal selection. The interfaces for pump control are permanently installed and cannot be changed subsequently.
- The pump can also be used without external pump control. The signal cable must be cut off on site and sealed with the supplied shrink-fit sleeve. The pump can “only” still be operated in Δp-v (variable) or Δp-c (constant)

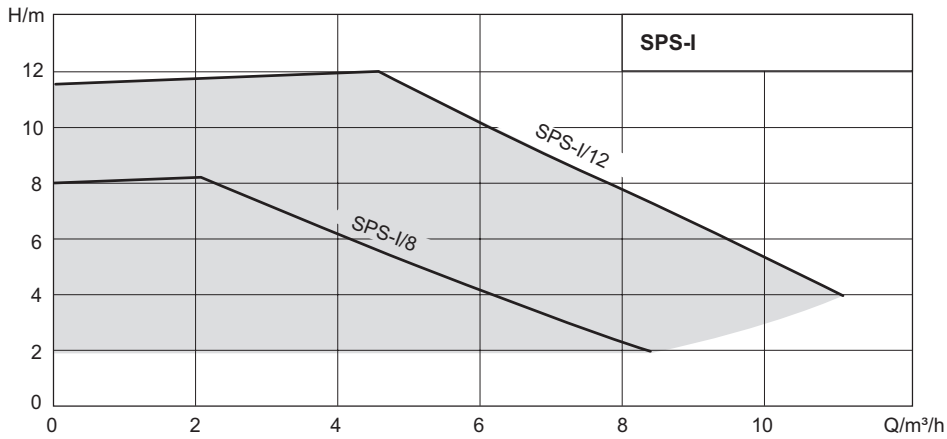

■ **Part No.**

Hoval system pump set SPS-I with interface for pump control
with flange connections

Part No.

- High-efficiency pump Stratos PARA, colour black, with operating mode switch red
- with interface analogue 0-10V or PWM1 (heating)
- Mains and control cable 1.5 m firmly wired up to the pump
- Electrical accessories “Quickon” line connector, Rast5 plug and shrink-fit sleeve
- Without counter flanges, screws and seals
- Thermal insulation jacket

Medium temperature -10 °C...+110 °C

Type key

Example	**SPS-I 32/8 220 0-10V**
SPS-I	High-efficiency pump with interface
32	Nominal diameter
8	Delivery head (mWC)
220	Overall length (mm)
0-10V	interface

Notices
- If the pump needs to be controlled, take care to make the correct signal selection. The interfaces for pump control are permanently installed and cannot be changed subsequently.
- The pump can also be used without external pump control. The signal cable must be cut off on site and sealed with the supplied shrink-fit sleeve. The pump can “only” still be operated in Δp-v (variable) or Δp-c (constant)

Type	Nominal diameter DN	Delivery head mWC	Overall length mm	Integrated function [1]	Connection DN	Rated pressure PN	EEI ≤	Part No.
SPS-I	32	8	220	0-10V	32	10	0.23	6044 015
SPS-I	32	8	220	PWM1	32	10	0.23	6044 016
SPS-I	32	12	220	0-10V	32	10	0.23	6044 017
SPS-I	32	12	220	PWM1	32	10	0.23	6044 018
SPS-I	40	8	220	0-10V	40	10	0.23	6044 019
SPS-I	40	8	220	PWM1	40	10	0.23	6044 020
SPS-I	40	12	220	0-10V	40	10	0.23	6044 021
SPS-I	40	12	220	PWM1	40	10	0.23	6044 022

[1] Type plate identification T
T2 = 0-10 V
T22/T10 = PWM 1 (heating)

Accessories

Welded-on flanges
2 welded-on flanges
Version in black incl. screws and joints.
Delivery with pump (separately packed)

DN	PN	
32	6	6041 213
40	6	6041 215
32	10	6041 214
40	10	6041 216

Sealing kit for flanges
Consisting of screws and seals.
Delivery with pump (separately packed).

DN	PN	
32	6	6041 271
40	6	6041 273
32	10/16	6041 272
40	10/16	6041 274

Technical data / Pump curves

SPS-I 32/8, 40/8

Pump curves

External signal via PWM

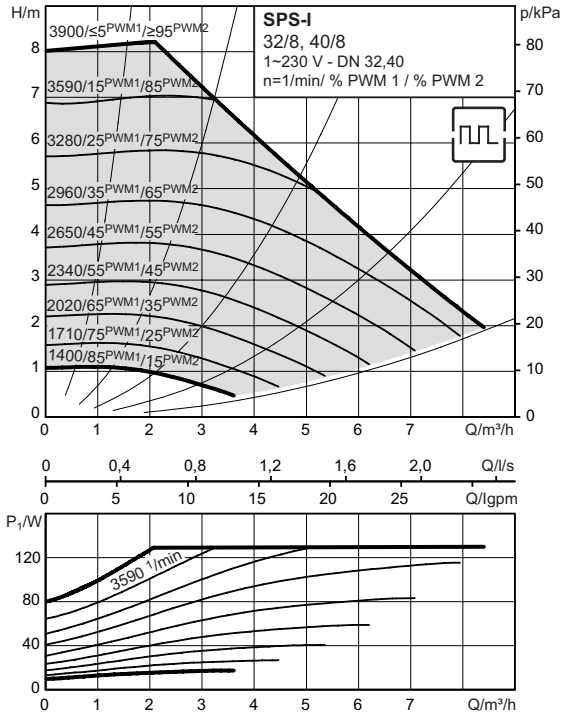

Pump curves

External control signal via analogue input 0-10 V

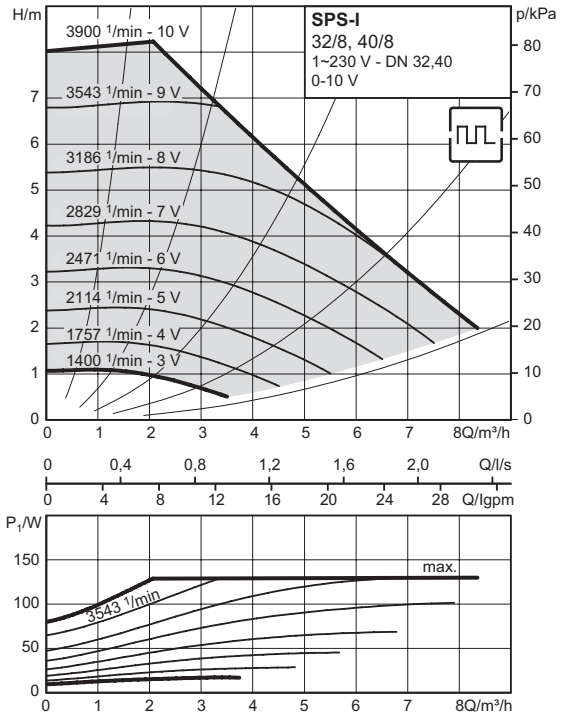

Pump curves

Δp-c (constant)

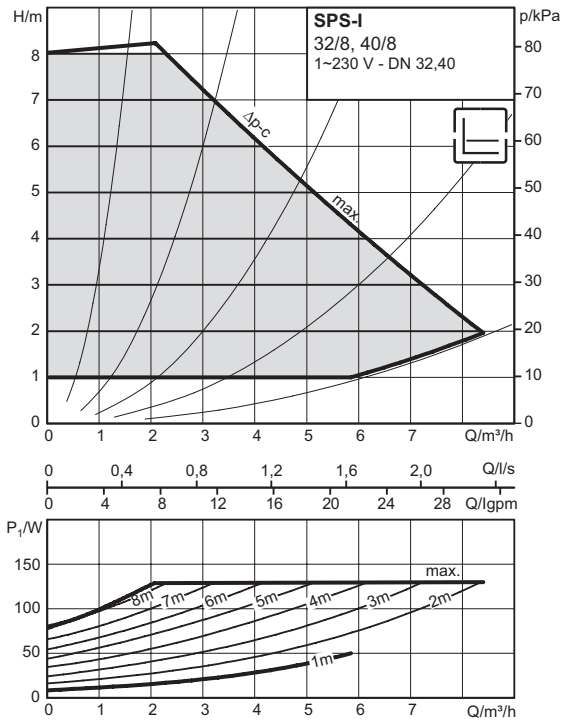

Pump curves

Δp-v (variable)

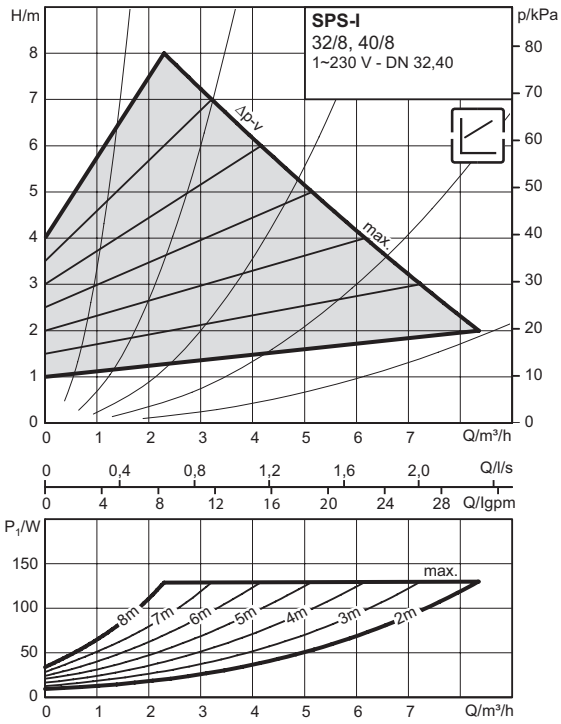

Technical data / Pump curves

Dimension drawing

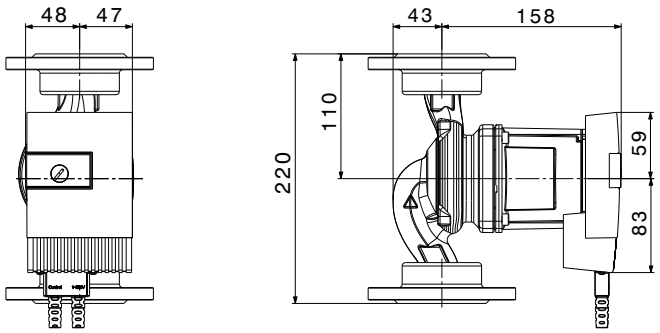

Dimension drawing, flange

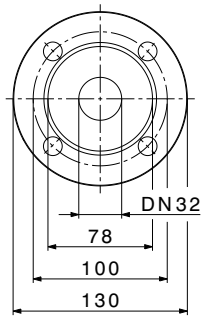

Technical data	
Rated pressure	PN 10
Mains connection	1~230 V, 50/60 Hz
Speed *n*	1400 - 3900 1/min
Power consumption P_1	8 - 130 W
Current consumption / Starting current [1]	0.07 - 0.95 A / 8 A
Separate power relay with direct connection via 230 V required (applies to all TTE controller modules and module expansions)	NO
Minimum suction head at 50 / 95 / 110 °C	3 / 10 / 16 m
Weight approx. *m*	4.7 kg
Materials	
Pump housing	Grey cast iron KTL (EN-GJL-200)
Impeller	Plastic (PP - 40 % GF)
Pump shaft	Stainless steel (1.4034)
Bearing	Carbon, metal impregnated
Approved fluids (other fluids on request)	
Heating water (acc. to Hoval engineering guidelines resp. VDI 2035)	
Water-glycol mixtures (max. 1:1; above 20% admixture, the pumping data must be checked)	
Permitted field of application	
Temperature range at max. ambient temperature +25 °C	-10 °C...+110 °C
Temperature range at max. ambient temperature +40 °C	-10 °C...+90 °C

[1] Note starting current

Terminal diagram (Notice: pump pre-wired)

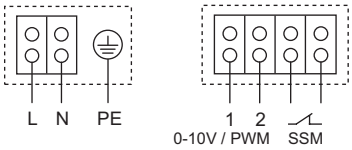

Blocking current-proof motor
Single-phase motor (EM) 2-pole - 1~230 V, 50 Hz

Technical data / Pump curves

SPS-I 32/12, 40/12

Pump curves

External signal via PWM

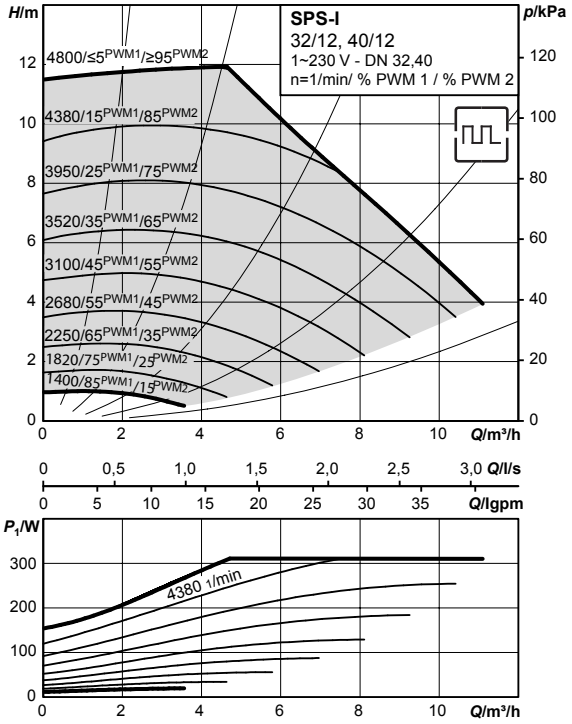

Pump curves

External control signal via analogue input 0-10 V

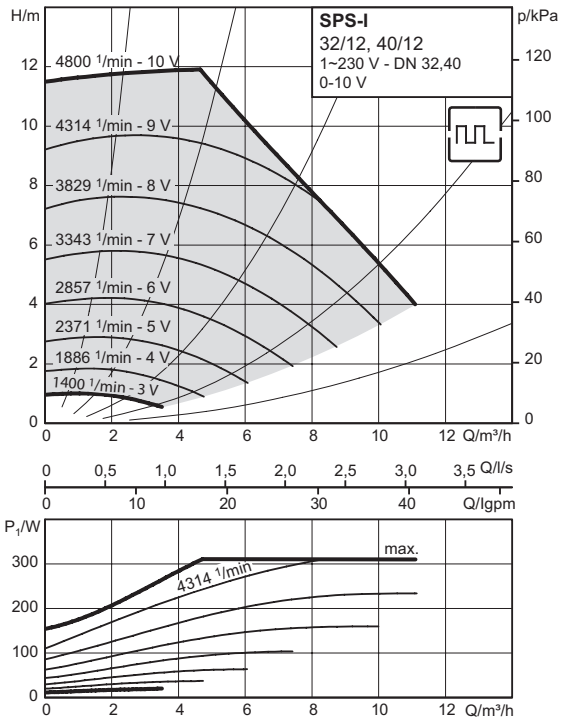

Pump curves

Δp-c (constant)

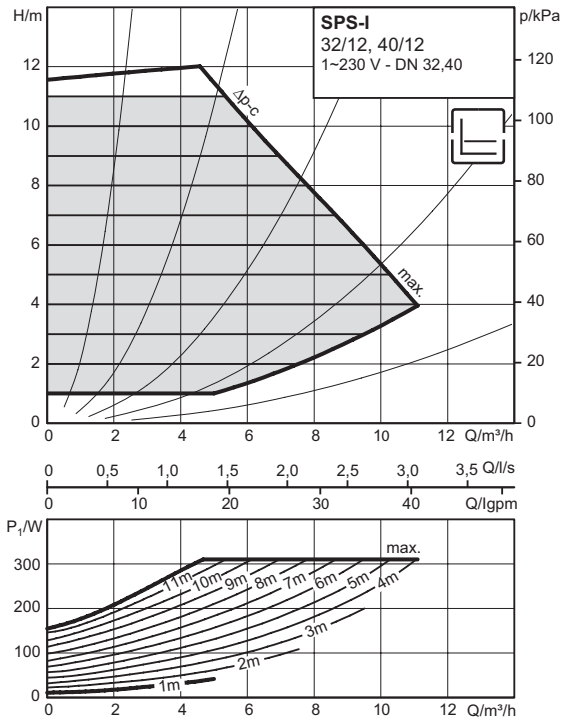

Pump curves

Δp-v (variable)

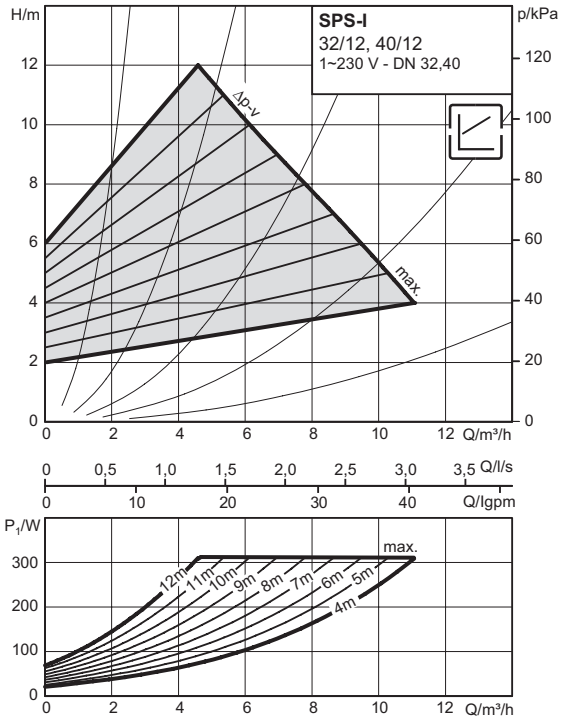

Technical data / Pump curves

Dimension drawing

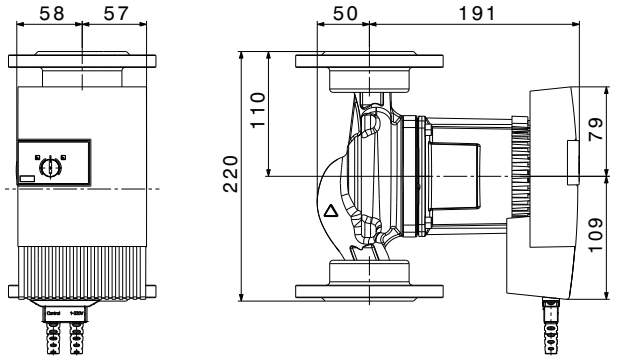

Dimension drawing, flange

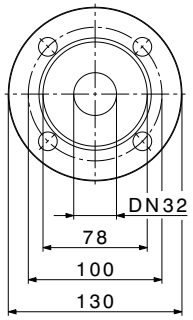

Technical data	
Rated pressure	PN 10
Mains connection	1~230 V, 50/60 Hz
Speed *n*	1400 - 4800 1/min
Power consumption P_1	16 - 310 W
Current consumption / Starting current [1]	0.16 - 1.37 A / 8 A
Separate power relay with direct connection via 230 V required (applies to all TTE controller modules and module expansions)	NO
Minimum suction head at 50 / 95 / 110 °C	3 / 10 / 16 m
Weight approx. *m*	6.2 kg
Materials	
Pump housing	Grey cast iron KTL (EN-GJL-200)
Impeller	Plastic (PP - 40 % GF)
Pump shaft	Stainless steel (1.4034)
Bearing	Carbon, metal impregnated
Approved fluids (other fluids on request)	
Heating water (acc. to Hoval engineering guidelines resp. VDI 2035)	
Water-glycol mixtures (max. 1:1; above 20 % admixture, the pumping data must be checked)	
Permitted field of application	
Temperature range at max. ambient temperature +25 °C	-10 °C...+110 °C
Temperature range at max. ambient temperature +40 °C	-10 °C...+90 °C

[1] Note starting current

Terminal diagram (Notice: pump pre-wired)

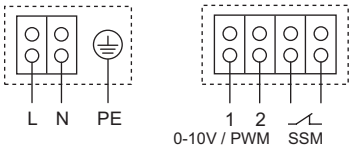

Blocking current-proof motor
Single-phase motor (EM) 2-pole - 1~230 V, 50 Hz

Description

Hoval HSP

- High-efficiency pump HSP electronically controlled
- Maintenance-free glandless circulating pump with threaded connection, blocking-current proof synchronous motor according to ECM technology and built-in electronic power control for variable differential pressure control
- Suitable for all heating, ventilation and solar applications (see Technical data)
- Preselectable control modes for optimum load adjustment:
  - Δp-c (differential pressure constant)
  - Δp-v (differential pressure variable)
- LED for setting the setpoint and displaying the current consumption in watts
- Minimal consumption only 4 W
- Indication of fault signals (error codes) Automatic deblocking function
- High starting torque
- Tool-free electrical connection using the Molex connection system or Connector
- Pump housing made of grey cast iron, impeller made of polypropylene, stainless steel shaft with metal-impregnated carbon friction bearings
- Thermal insulation jacket made of EPP

Motor
Voltage 1 x 230 V, frequency 50/60 Hz
Protection class IP X2D (IP 42)
Insulation class F
Integrated motor protection

Medium temperature
at max. ambient temperature
+40 °C: -10 °C...+95 °C

Connections
DN 15 - DN 30
With external thread including seals

Design on request
Compensation pieces for adapting the installation length with replacement pumps see chapter “Type comparison”

ErP READY — APPLIES TO EUROPEAN DIRECTIVE FOR ENERGY RELATED PRODUCTS

Δp-v	Differential pressure variable
Δp-c	Differential pressure constant

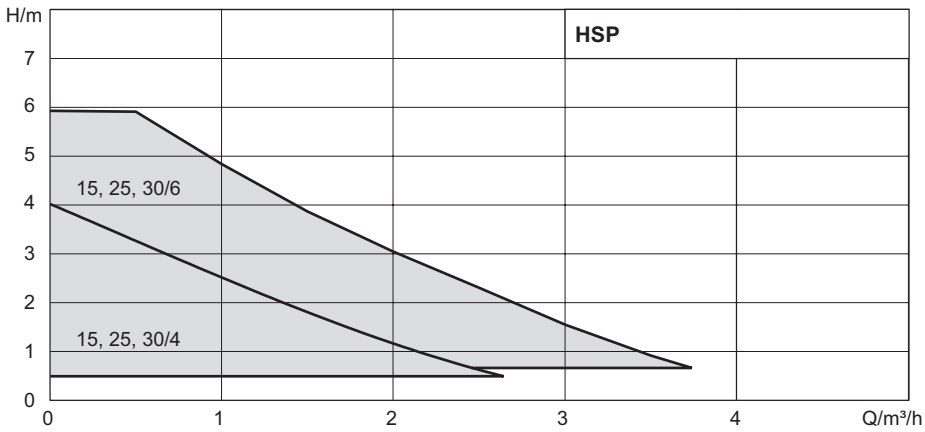

■ Part No.

Hoval HSP premium pump
with external thread without screwings

Part No.

- High-efficiency pump HSP, colour red, with operating mode switch and LED indicator
- Including seals and thermal insulation jacket

Medium temperature -10 °C...+95 °C

Type	Nominal diameter DN	Delivery head mWC	Overall length mm	Electrical connection	Connection G	Rated pressure PN	EEI ≤	Part No.
HSP	15	4	130	SMO	1″	6	0.20	2068 204
HSP	15	6	130	SMO	1″	6	0.20	2068 205
HSP	25	4	180	SMO	1½″	6	0.20	2068 207
HSP	25	6	180	SMO	1½″	6	0.20	2068 208
HSP	30	4	180	SMO	2″	6	0.20	2068 210
HSP	30	6	180	SMO	2″	6	0.20	2068 211

Type key

Example	**HSP 15/6 130 SMO**
HSP	High-efficiency pump
15	Nominal diameter
6	Delivery head (mWC)
130	Overall length (mm)
SMO	Molex connection system

Part No.

Accessories	Part No.

Angled plug for Molex connection — 242 920
Side angled plug with
2 m connection cable. For electrical
connection in cramped conditions.

Angled plug for Connector replacement — 242 956
Side angled plug with 2 m
connection cable. For electrical
connection in cramped conditions.

Connection set
Connection set for pumps
consisting of 2 ball valves brass
incl. seals

Type	Pump connections	Screw connections	
AS20-KH	G 1″	R 1″	6032 100
AS25-KH	G 1½″	Rp 1″	6041 180
AS32-KH	G 2″	Rp 1¼″	6041 912

Screw fittings brass
2 fittings
Version brass incl. seals

Type	G	Rp	
VSM11	1″	¾″	6024 287
VSM21	1½″	1″	6007 004
VSM31	2″	1¼″	6022 618
VSM32	2″	1″	6042 941
VSM33	2″	1½″	6042 942

Screw fittings grey cast iron
2 fittings
Version grey cron GTW yellow chromated
incl. seals.
Delivery with pump (separately packed)

Type	G	Rp	
VSV11	1″	½″	6040 866
VSV21	1½″	1″	6040 867
VSV31	2″	1¼″	6040 868

Technical data / Pump curves

HSP 15/4, 25/4, 30/4

Pump curves

Δp-c (constant)

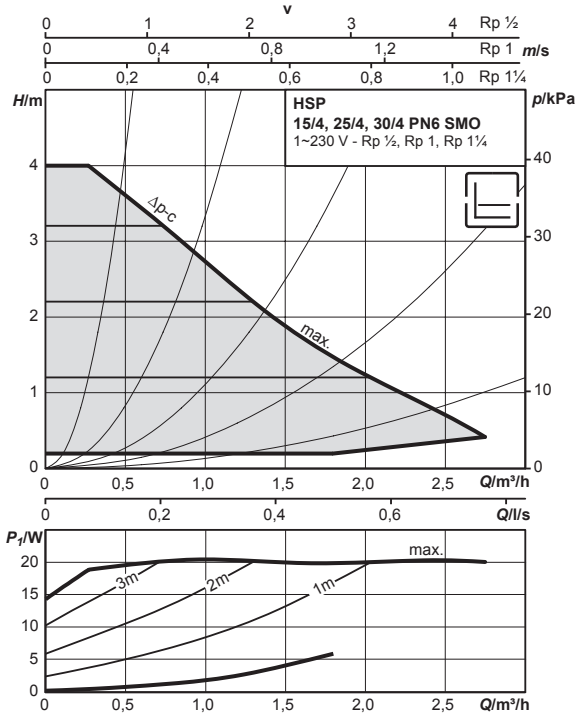

Pump curves

Δp-v (variable)

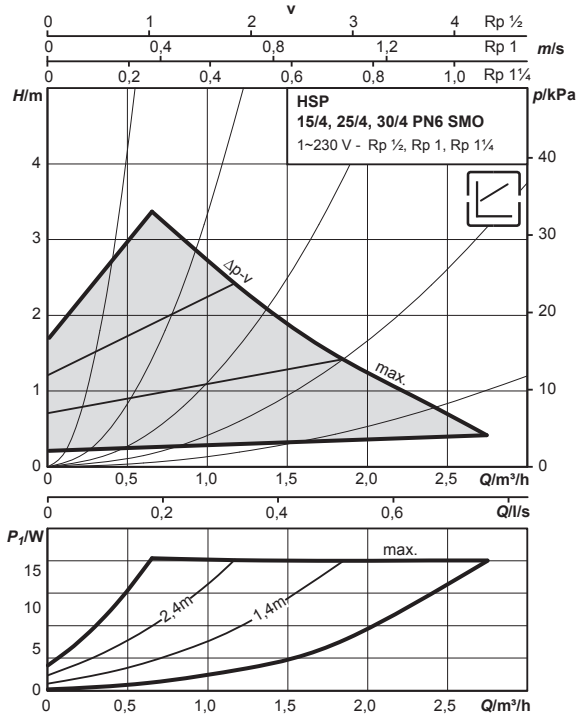

Dimension drawing

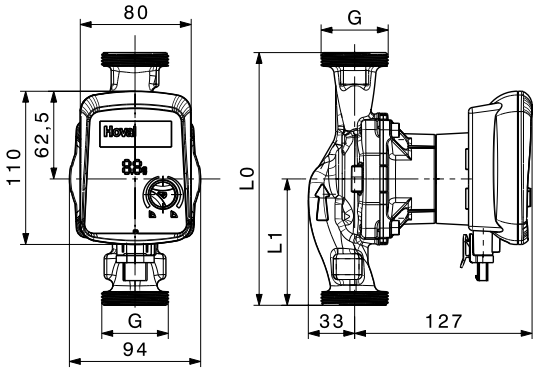

Type	Threaded pipe union	Thread	Overall length		Weight approx.
		G	*L0* mm	*L1* mm	*m* kg
15/6	Rp ½	G 1	130	65	1.8
25/6	Rp 1	G 1½	180	90	2.0
30/6	Rp 1¼	G 2	180	90	2.2

Terminal diagram (Notice: pump pre-wired)

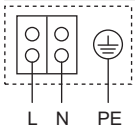

Blocking current-proof motor
Single-phase motor (EM) 2-pole - 1~230 V, 50 Hz

Technical data	
Rated pressure	PN 6
Mains connection	1~230 V, 50 Hz
Speed *n*	800 - 3600 1/min
Power consumption P_1	4 - 20 W
Current consumption / Starting current	max. 0.26 A / < 5 A
Separate power relay with direct connection via 230 V required (applies to all TTE controller modules and module expansions)	NO
Minimum suction head at 50 / 95 / 110°C	0.5 / 3 / 10 m
Materials	
Pump housing	Grey cast iron (EN-GJL-200)
Impeller	Plastic (PP - 40 % GF)
Pump shaft	Stainless steel
Bearing	Carbon, metal impregnated
Approved fluids	
Heating water (acc. to Hoval engineering guidelines resp. VDI 2035)	
Water-glycol mixtures (max. 1:1; above 20 % admixture, the pumping data must be checked)	
Permitted field of application	
Temperature range at max. ambient temperature +40 °C	-10 °C...+95 °C

Technical data / Pump curves

HSP 15/6, 25/6, 30/6

Pump curves

Δp-c (constant)

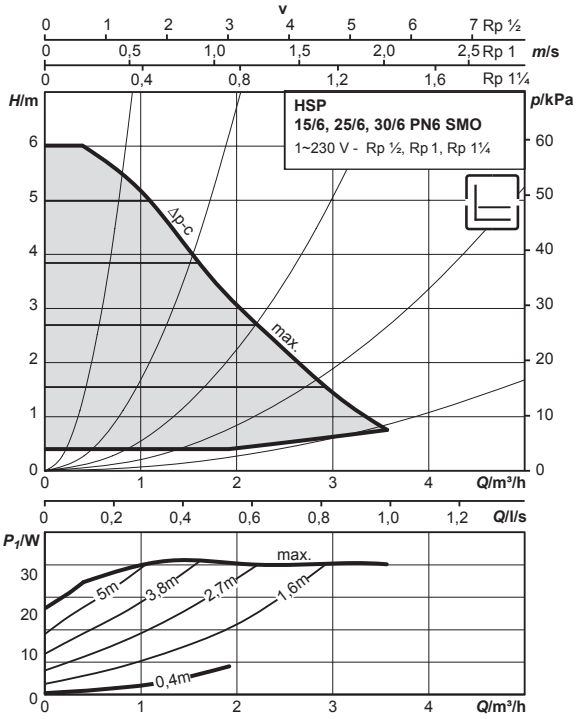

Pump curves

Δp-v (variable)

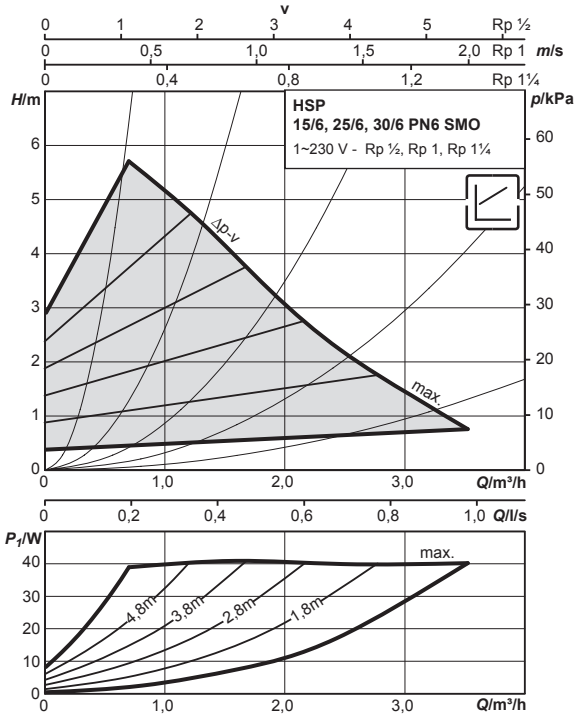

Dimension drawing

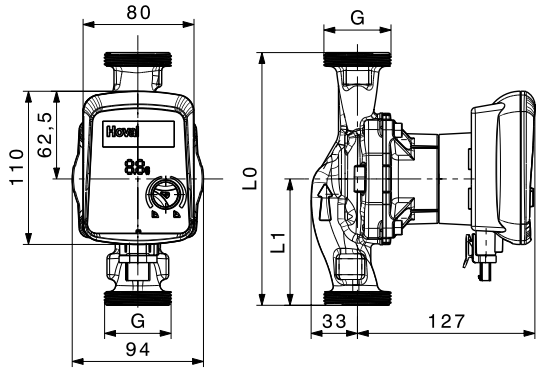

Type	Threaded pipe union	Thread	Overall length		Weight approx.
		G	*L0* mm	*L1* mm	*m* kg
15/6	Rp ½	G 1	130	65	1.8
25/6	Rp 1	G 1½	180	90	2.0
30/6	Rp 1¼	G 2	180	90	2.2

Terminal diagram (Notice: pump pre-wired)

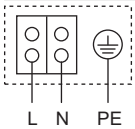

Blocking current-proof motor
Single-phase motor (EM) 2-pole - 1~230 V, 50 Hz

Technical data

Rated pressure	PN 6
Mains connection	1~230 V, 50 Hz
Speed *n*	800 - 4700 1/min
Power consumption P_1	4 - 40 Watt
Current consumption / Starting current	max. 0.44 A / < 5 A
Separate power relay with direct connection via 230 V required (applies to all TTE controller modules and module expansions)	NO
Minimum suction head at 50 / 95 / 110 °C	0.5 / 3 / 10 m

Materials

Pump housing	Grey cast iron (EN-GJL-200)
Impeller	Plastic (PP - 40 % GF)
Pump shaft	Stainless steel
Bearing	Carbon, metal impregnated

Approved fluids

Heating water
(acc. to Hoval engineering guidelines resp. VDI 2035)

Water-glycol mixtures (max. 1:1; above 20 % admixture, the pumping data must be checked)

Permitted field of application

Temperature range at max. ambient temperature +40 °C	-10 °C...+95 °C

Description

Stratos PICO plus

ErP READY — APPLIES TO EUROPEAN DIRECTIVE FOR ENERGY RELATED PRODUCTS

- High-efficiency pump electronically controlled
- Maintenance-free glandless circulating pump with screwed connection, blocking-current proof synchronous motor using ECM technology and built-in electronic power control for variable differential pressure control
- Suitable for all heating, ventilation and solar applications (see Technical data)
- Preselectable control modes for optimum load adjustment:
  - Δp-c (differential pressure constant)
  - Δp-v (differential pressure variable)
  - with Dynamic Adapt, the pump continuously adapts to the requirements of the heating system with short control intervals
- Automatic setback operation
- Operating and fault display (with error codes)
- LC display with precise menu navigation
- Display of the instantaneous power in Watts, or
- Display of current flow in m³/h
- Display of the cumulative power consumption in kilowatt-hours
- Reset function for resetting the electricity meter or for resetting the settings to the factory settings
- “Hold” function (key lock) for disabling the settings
- Minimal consumption only 3 W
- Compact design
- Automatic deblocking function
- High starting torque
- Venting routine for automatic venting of the rotor chamber
- Pump housing made of cast iron, impeller made of polypropylene, stainless steel shaft with metal-impregnated carbon friction
- Thermal insulation jacket made of EPP

Δp-v	Differential pressure variable
Δp-c	Differential pressure constant

Motor
Voltage 1 x 230 V, frequency 50/60 Hz
Protection class IP X4D
Insulation class F
Integrated motor protection

Medium temperature
at max. ambient temperature
+25 °C: +2 °C...+110 °C
+40 °C: +2 °C...+95 °C
+60 °C: +2 °C...+70 °C

Connections
DN 15 - DN 30
With external thread including seals (without fittings)

Design on request
Compensation pieces for adapting the installation length with replacement pumps see chapter “Type comparison”

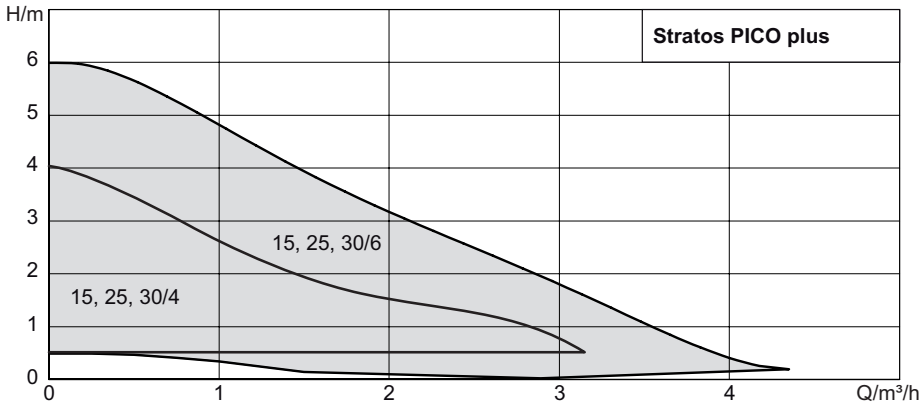

Part No.

Stratos PICO plus premium pump
with external thread without fittings

Part No.

- High-efficiency premium pump, colour green, with operating mode switch and LC display
- With external thread without fittings
- Thermal insulation jacket
- Cast iron pump body

Medium temperature +2 °C...+110 °C

Wilo	Hoval						
Stratos PICO plus	Nominal diameter DN	Delivery head mWC	Overall length mm	Connection G	Rated pressure PN	EEI ≤	
15/1-4	15	4	130	1″	10	0.16	2070 856
15/1-6	15	6	130	1″	10	0.20	2070 857
25/1-4-130	25	4	130	1½″	10	0.16	2070 858
25/1-6-130	25	6	130	1½″	10	0.20	2070 859
25/1-4	25	4	180	1½″	10	0.16	2070 860
25/1-6	25	6	180	1½″	10	0.20	2070 861
30/1-4	30	4	180	2″	10	0.16	2070 862
30/1-6	30	6	180	2″	10	0.20	2070 863

Type key Hoval

Example	**Stratos PICO plus 25/4 130**
Stratos PICO plus	High-efficiency pump
25	Nominal diameter
4	Delivery head (mWC)
130	Overall length (mm)

Type key Wilo

Example	**Stratos PICO plus 25/1-4-130**
25/	Nominal connection diameter
1-4	Nominal delivery head range (m)
130	Overall length (mm)

Accessories

Connection set
Connection set for pumps consisting of 2 ball valves brass incl. seals

Type	Pump connection	Screw connection	
AS20-KH	G 1″	R 1″	6032 100
AS25-KH	G 1½″	Rp 1″	6041 180
AS32-KH	G 2″	Rp 1¼″	6041 912

Screw fittings brass
2 fittings
Version brass incl. seals

Type	G	Rp	
VSM11	1″	¾″	6024 287
VSM21	1½″	1″	6007 004
VSM31	2″	1¼″	6022 618
VSM32	2″	1″	6042 941
VSM33	2″	1½″	6042 942

Screw fittings grey cast iron
2 fittings
Version grey cron GTW yellow chromated incl. seals.
Delivery with pump (separately packed)

Type	G	Rp	
VSV11	1″	½″	6040 866
VSV21	1½″	1″	6040 867
VSV31	2″	1¼″	6040 868

Technical data / Pump curves

Stratos PICO plus 15/4, 25/4, 30/4

Pump curves

Δp-c (constant)

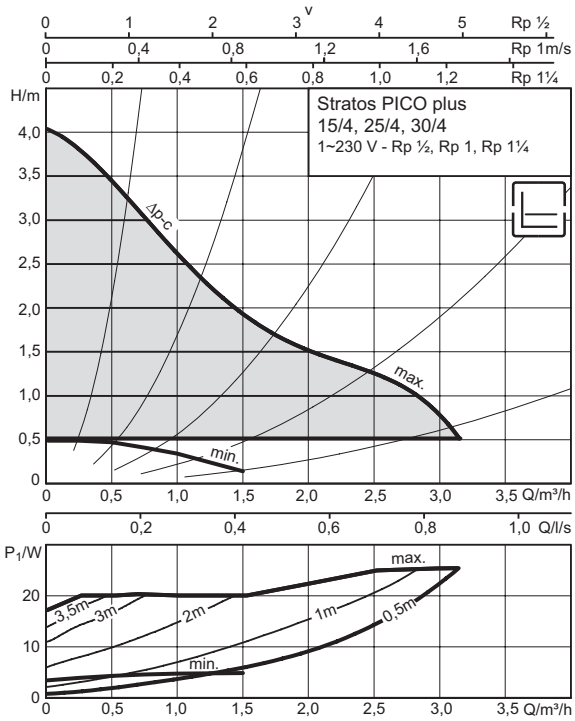

Pump curves

Δp-v (variable)

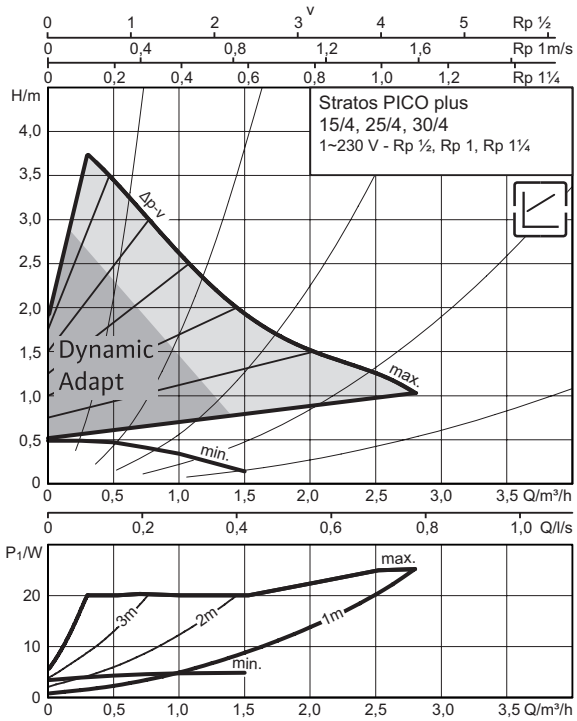

Dimension drawing

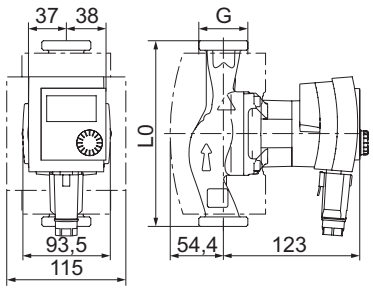

Type	Threaded pipe union	Thread	Overall length	Weight approx.
		G	*L0* mm	*m* kg
15/4	Rp ½	G 1	130	1.7
25/4	Rp 1	G 1½	180	2.1
25/4-130	Rp 1	G 1½	130	1.7
30/4	Rp 1¼	G 2	180	2.1

Terminal diagram

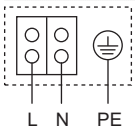

Blocking current-proof motor
Single-phase motor (EM) 2-pole - 1~230 V, 50 Hz

Technical data

Rated pressure	PN 10
Mains connection	1~230 V, 50/60 Hz
Speed *n*	1200 - 3492 1/min
Power consumption P_1	3 - 25 W
Current consumption / Starting current	max. 0.33 A / < 5 A
Separate power relay with direct connection via 230 V required (applies to all TTE controller modules and module expansions)	NO
Minimum suction head at 50/95/110 °C	0.5 / 3 / 10 m
Materials	
Pump housing	Grey cast iron (EN-GJL-200)
Impeller	Plastic (PP - 40 % GF)
Pump shaft	Stainless steel
Bearing	Carbon, metal impregnated
Approved fluids (other fluids on request)	
Heating water (acc. to Hoval engineering guidelines resp. VDI 2035)	
Water-glycol mixtures (max. 1:1; above 20 % admixture, the pumping data must be checked)	
Permitted field of application	
Temperature range at max. ambient temperature +25 °C	+2 °C...+110 °C
Temperature range at max. ambient temperature +40 °C	+2 °C...+95 °C
Temperature range at max. ambient temperature +60 °C	+2 °C...+70 °C

Technical data / Pump curves

Stratos PICO plus 15/6, 25/6, 30/6

Pump curves

Δp-c (constant)

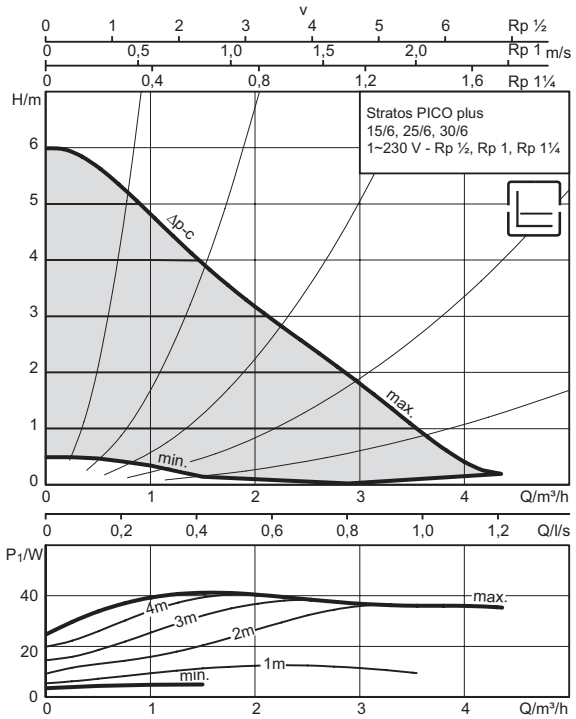

Pump curves

Δp-v (variable)

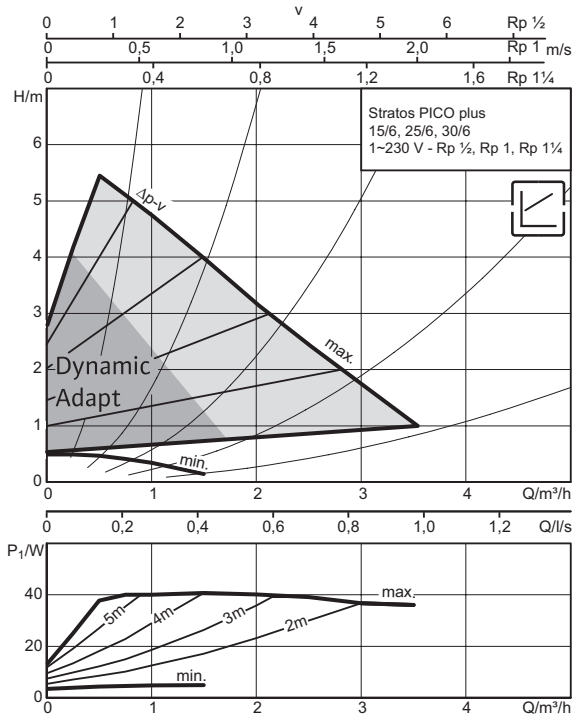

Dimension drawing

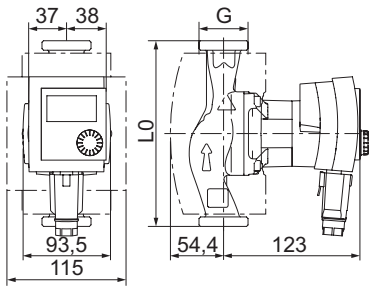

Type	Threaded pipe union	Thread	Overall length	Weight approx.
		G	*L0* mm	*m* kg
15/6	Rp ½	G 1	130	1.7
25/6	Rp 1	G 1½	180	2.0
25/6-130	Rp 1	G 1½	130	1.7
30/6	Rp 1¼	G 2	180	2.1

Terminal diagram

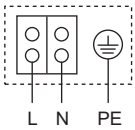

Blocking current-proof motor
Single-phase motor (EM) 2-pole - 1~230 V, 50 Hz

Technical data

Rated pressure	PN 10
Mains connection	1~230 V, 50/60 Hz
Speed *n*	1200 - 4230 1/min
Power consumption P_1	3 - 40 W
Current consumption / Starting current	max. 0.44 A / < 5 A
Separate power relay with direct connection via 230 V required (applies to all TTE controller modules and module expansions)	NO
Minimum suction head at 50/95/110 °C	0.5 / 3 / 10 m

Materials

Pump housing	Grey cast iron (EN-GJL-200)
Pump housing (RG version)	Red brass (CC499K)
Impeller	Plastic (PP - 40 % GF)
Pump shaft	Stainless steel
Bearing	Carbon, metal impregnated

Approved fluids (other fluids on request)

Heating water
(acc. to Hoval engineering guidelines resp. VDI 2035)

Water-glycol mixtures (max. 1:1; above 20 % admixture, the pumping data must be checked)

Permitted field of application

Temperature range at max. ambient temperature +25 °C	+2 °C...+110 °C
Temperature range at max. ambient temperature +40 °C	+2 °C...+95 °C
Temperature range at max. ambient temperature +60 °C	+2 °C...+70 °C

Description

Stratos DN 25,30

ErP READY — APPLIES TO EUROPEAN DIRECTIVE FOR ENERGY RELATED PRODUCTS

- High-efficiency pump electronically controlled
- Circulating pump with minimum operating costs, for pipe installation
- Can be used for all HVAC and solar applications
- One-button manual operation level for:
  - Pump on/off
- Selecting the control mode:
  - Δp-c (differential pressure constant)
  - Δp-v (differential pressure variable)
  - Δp-T (differential pressure temperature-controlled) by means of IR-Monitor/ IR-Module/IR-Stick, Modbus, BACnet, LON or Can
  - Q-Limit to restrict the maximum volume flow (setting only via IR-Stick)
  - Manual control mode (setting constant speed)
  - Automatic setback operation (self-learning)
  - Setpoint and speed adjustment
- Graphical pump display for each pump, with rotatable display horizontal and vertical module mounting, for display of:
  - Operating state
  - Control mode
  - Differential pressure or rotation speed setpoint
  - Fault and warning signals
- Synchronous motor using ECM technology with very high efficiency and high starting torque, automatic deblocking function
- Fault signal light, potential-free collective fault signal, infrared interface for wireless communication with Wilo IR-Monitor/ IR-Stick operating and service device.
- 1 plug-in slot for Stratos IF-modules with interfaces for building automation (BA) or dual pump management
- Pump housing made of cast iron with cataphoretic coating, impeller made of glass-fibre reinforced plastic, stainless steel shaft with metal impregnated carbon plain bearings.
- Thermal insulation jacket made of EPP

Δp-v	Differential pressure variable
	Control signal / interface
Δp-c	Differential pressure constant

Motor
Voltage 1 x 230 V, frequency 50/60 Hz
Protection class IP X4D
Insulation class F
Integrated motor protection

Medium temperature
at max. ambient temperature
+40 °C: -10 °C...+110 °C

Connections
DN 25, 30
With external thread including seals
(without fittings)

Design on request
Compensation pieces for adapting the installation length with replacement pumps see chapter “Type comparison”

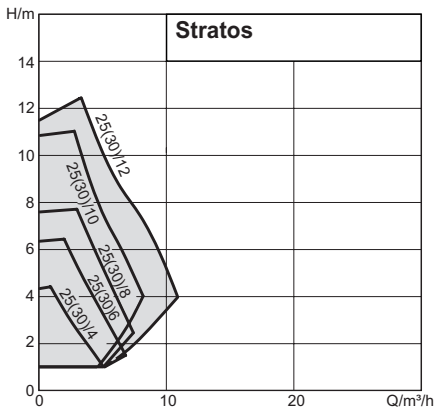

Part No.

Stratos DN 25,30 premium pump
with external thread without fittings

Part No.

- High-efficiency premium pump, colour green, with operating mode switch and LC display
- Slot for IF modules
- With external thread without fittings
- Thermal insulation jacket

Medium temperature -10 °C...+110 °C

Type key Hoval

Example	**Stratos 25/6 180**
Stratos	High-efficiency pump
25	Nominal diameter
6	Delivery head (mWC)
180	Overall length (mm)

Type key Wilo

Example	**Stratos 25/1-6**
25/	Nominal connection diameter
1-6	Nominal delivery head range (m)

Wilo	Hoval						
Stratos	Nominal diameter DN	Delivery head mWC	Overall length mm	Connection G	Rated pressure PN	EEI ≤	
25/1-4	25	4	180	1½″	10	0.20	2065 610
25/1-6	25	6	180	1½″	10	0.20	2064 670
25/1-8	25	8	180	1½″	10	0.20	2064 671
25/1-10	25	10	180	1½″	10	0.20	2064 672
25/1-12	25	12	180	1½″	10	0.20	2064 673
30/1-4	30	4	180	2″	10	0.20	2065 611
30/1-6	30	6	180	2″	10	0.20	2064 674
30/1-8	30	8	180	2″	10	0.20	2064 675
30/1-10	30	10	180	2″	10	0.20	2064 676
30/1-12	30	12	180	2″	10	0.20	2064 677

Accessories

Connection set
Connection set for pumps consisting of 2 ball valves brass incl. seals

Type	Pump connection	Screw connection	
AS25-KH	G 1½″	Rp 1″	6041 180
AS32-KH	G 2″	Rp 1¼″	6041 912

Screw fittings brass
2 fittings
Version brass incl. seals

Type	G	Rp	
VSM21	1½″	1″	6007 004
VSM31	2″	1¼″	6022 618
VSM32	2″	1″	6042 941
VSM33	2″	1½″	6042 942

Screw fittings grey cast iron
2 fittings
Version grey cron GTW yellow chromated incl. seals.
Delivery with pump (separately packed)

Type	G	Rp	
VSV21	1½″	1″	6040 867
VSV31	2″	1¼″	6040 868

Part No.

	Part No.
IR stick USB stick for wireless data exchange for Wilo pumps with infrared interface, adaptable to Windows laptops with USB interface. The IR stick, in connection with the provided software (CD-ROM), enables you to access and store pump data sets as well as send pre-defined pump settings.	2064 594

IR monitor Operation and service unit for wireless remote control and remote diagnosis for wilo-pumps with infrared interface. Robust plastic housing with graphic display and 1-button operation.	2064 595

IF modules
Retrofittable plug-in modules for extending the pump functions, for digital interfaces or for connection to the building management system

Interfaces for TopTronic® E	
Interface Ext. Off / SBM	2064 604
Interface Ext. Off / 0-10 V	2064 601
Interface SBM / 0-10 V	2064 603
Interface Ext. Min / 0-10 V	2064 602

Interfaces for building automation	
Interface Modbus RTU	2064 596
Interface LON	2064 599
Interface CANopen	2064 598
Interface BACnet MS/TP	2064 597
Interface PLR	2064 600

Dual pump management (Modbus, BACnet, CANopen)	
Interface DP	2064 605

■ Technical data / Pump curves

Stratos 25/4, 30/4

Pump curves

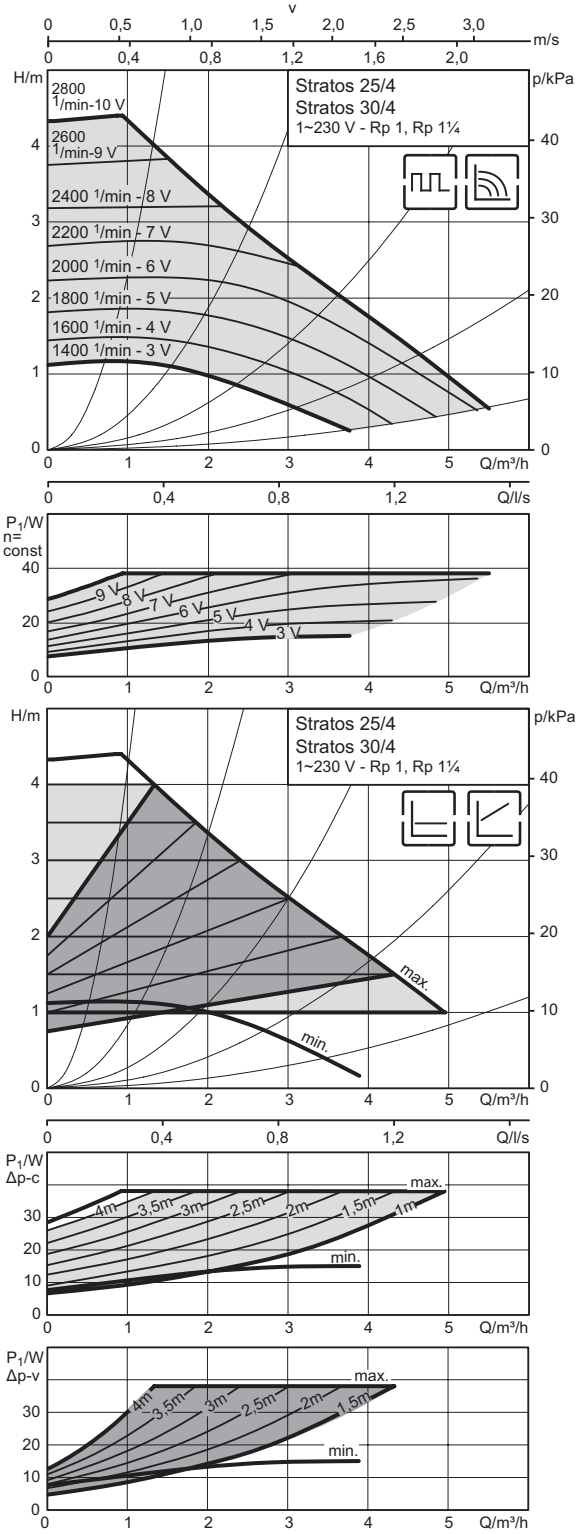

Technical data / Pump curves

Dimension drawing

Stratos 25/4

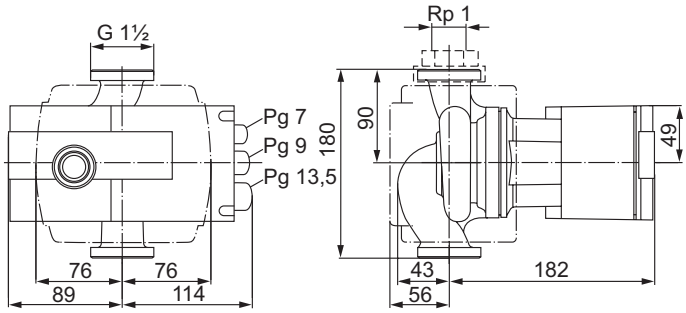

Dimension drawing

Stratos 30/4

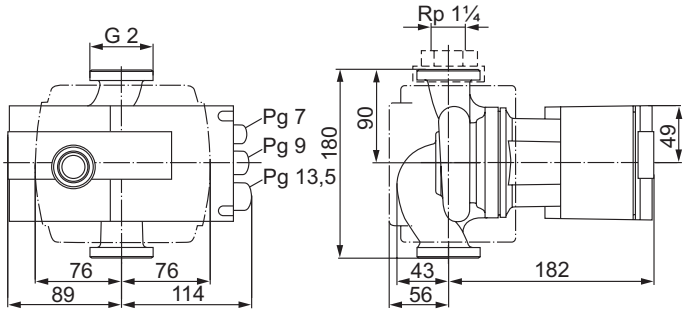

Technical data

Designation	Stratos 25/4	Stratos 30/4
Energy efficiency index (EEI)	≤ 0.20	≤ 0.20
Threaded pipe union	Rp 1	Rp 1¼
Rated pressure	PN 10	PN 10
Mains connection	1~230 V, 50/60 Hz	1~230 V, 50/60 Hz
Speed *n*	1400 - 2800 1/min	1400 - 2800 1/min
Rated power P_2	30 W	30 W
Power consumption P_1	9 - 38 W	9 - 38 W
Current consumption/Starting current [1]	0.13 - 0.35 A / 8 A	0.13 - 0.35 A / 8 A
Separate power relay with direct connection via 230 V required (applies to all TTE controller modules and module expansions)	NO	NO
Minimum suction head at 50/95/110 °C	3 / 10 / 16 m	3 / 10 / 16 m
Weight approx. *m*	4.1 kg	4.1 kg

Materials

Pump housing	Grey cast iron (EN-GJL-250)
Impeller	Plastic (PPE - 30 % GF)
Pump shaft	Stainless steel (X30CR13)
Bearing	Carbon, metal impregnated

[1] Note starting current

Terminal diagram

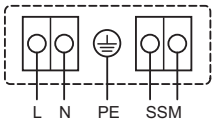

SSM:
Collective fault signal
(NC contact according to VDI 3814, load capacity 1 A, 250 V ~)

Approved fluids (other fluids on request)

Heating water (acc. to Hoval engineering guidelines resp. VDI 2035)

Water-glycol mixtures
(max. 1:1; above 20 % admixture, the pumping data must be checked)

Permitted field of application

Temperature range at max. ambient temperature +40 °C	-10 °C...+110 °C

Technical data / Pump curves

Stratos 25/6, 30/6, Stratos 25/8, 30/8

Pump curves

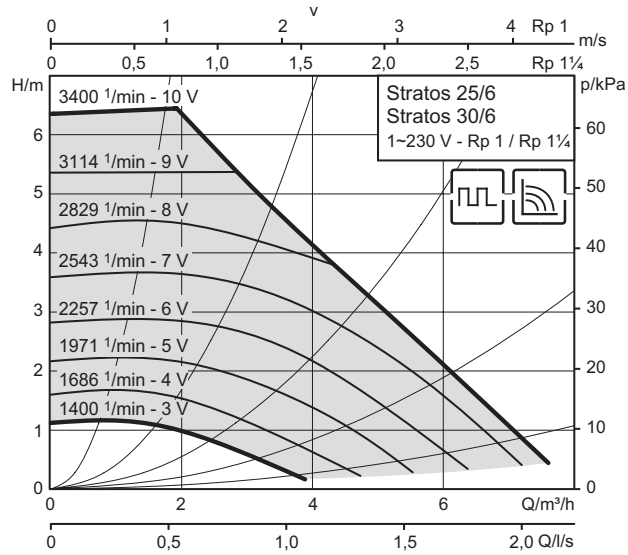

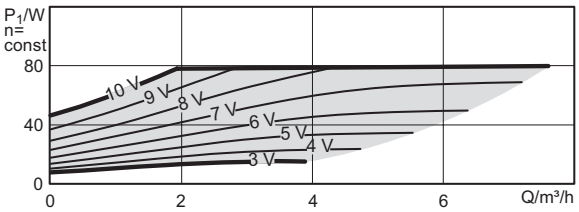

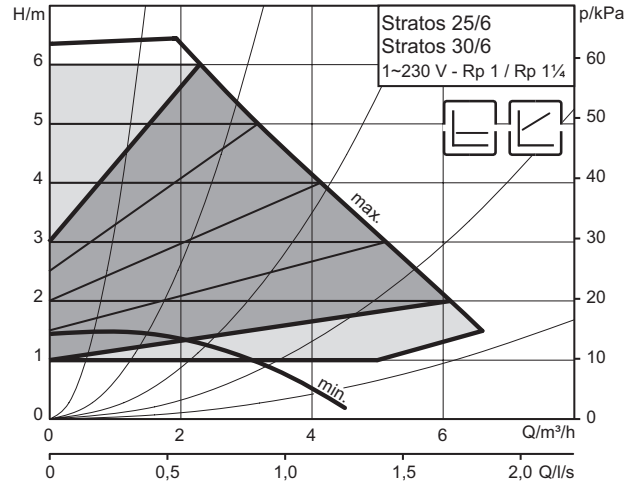

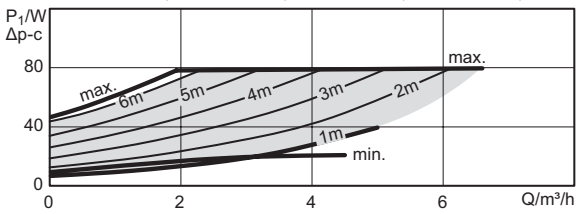

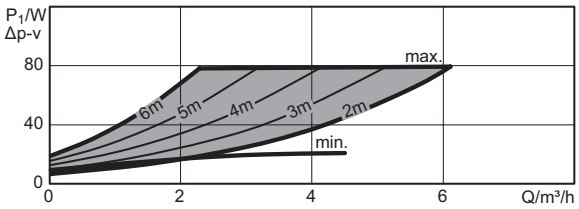

Pump curves

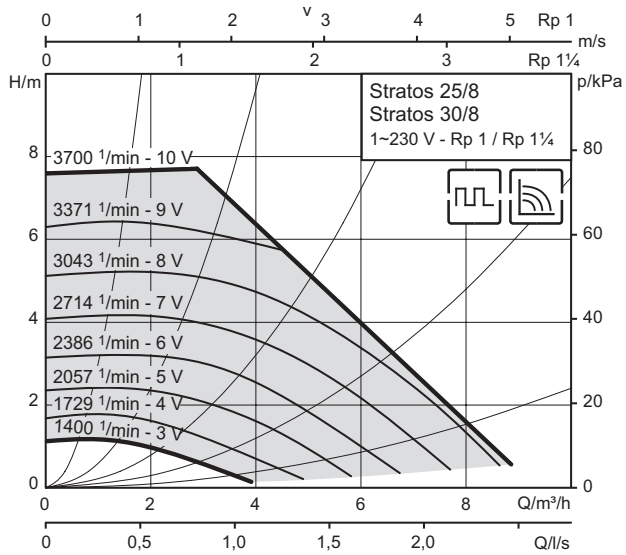

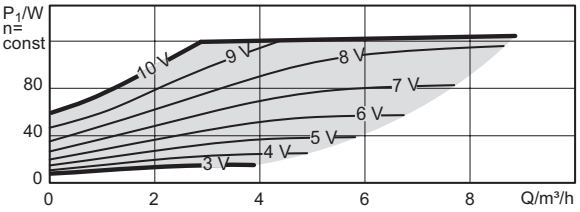

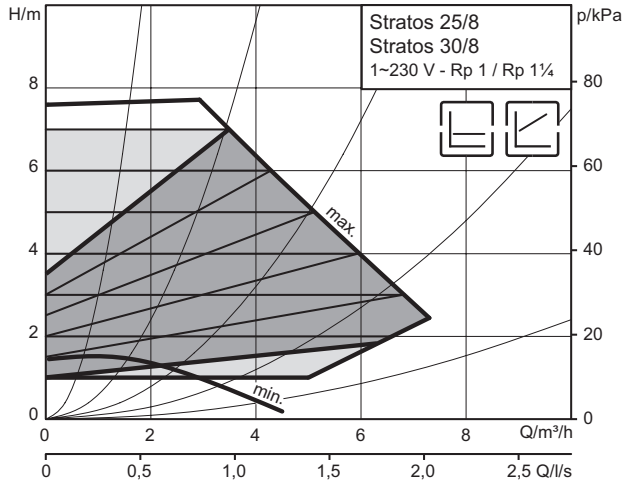

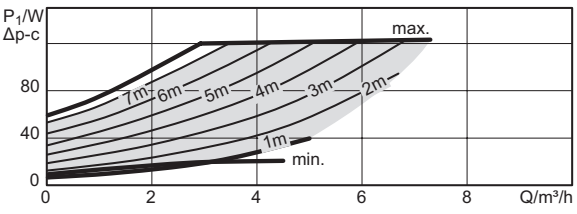

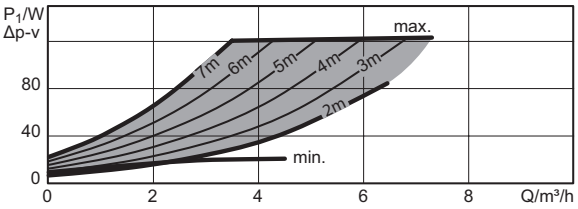

Technical data / Pump curves

Dimension drawing

Stratos 25/6

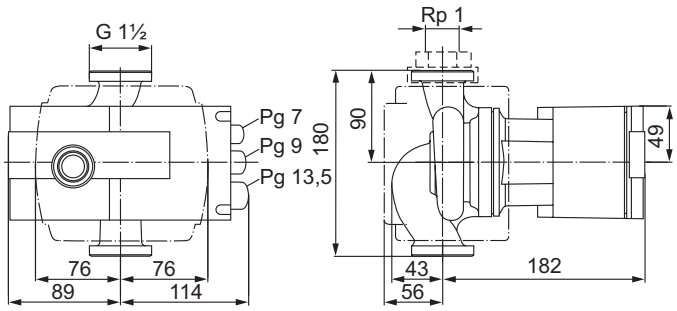

Dimension drawing

Stratos 25/8

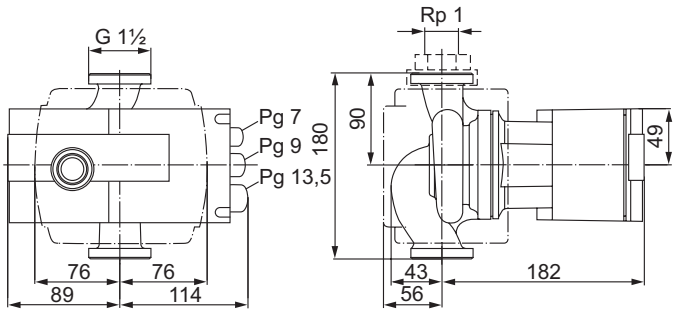

Dimension drawing

Stratos 30/6

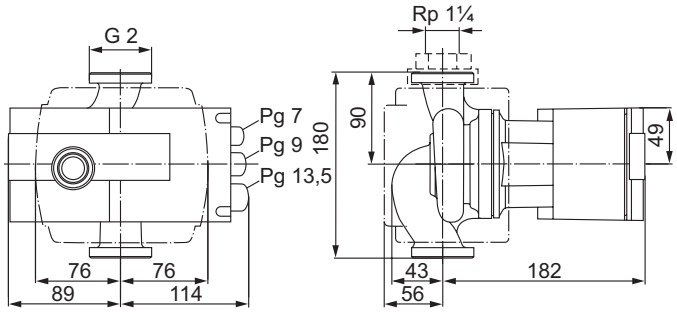

Dimension drawing

Stratos 30/8

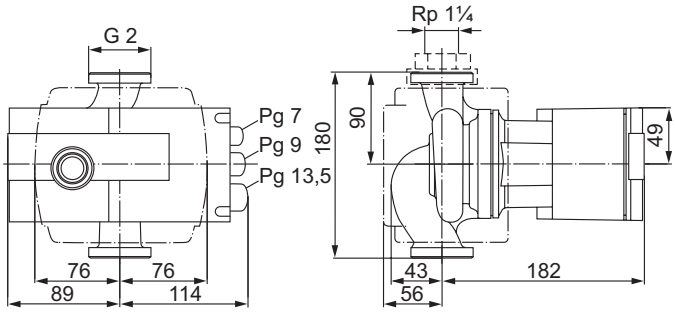

Technical data

Designation	Stratos 25/6	Stratos 25/8	Stratos 30/6	Stratos 30/8
Energy efficiency index (EEI)	≤ 0.20	≤ 0.20	≤ 0.20	≤ 0.20
Threaded pipe union	Rp 1	Rp 1	Rp 1¼	Rp 1¼
Rated pressure	PN 10	PN 10	PN 10	PN 10
Mains connection	1~230 V, 50/60 Hz	1~230 V, 50/60 Hz	1~230 V, 50/60 Hz	1~230 V, 50/60 Hz
Speed *n*	1400 - 3400 1/min	1400 - 3700 1/min	1400 - 3400 1/min	1400 - 3700 1/min
Rated power P_2	65 W	100 W	65 W	100 W
Power consumption P_1	9 - 80 W	9 - 125 W	9 - 80 W	9 - 125 W
Current consumption	0.13 - 0.70 A	0.13 - 1.10 A	0.13 - 0.70 A	0.13 - 1.10 A
Separate power relay with direct connection via 230 V required (applies to all TTE controller modules and module expansions)	NO	NO	NO	NO
Minimum suction head at 50/95/110 °C	3 / 10 / 16 m	3 / 10 / 16 m	3 / 10 / 16 m	3 / 10 / 16 m
Weight approx. *m*	4.1 kg	4.1 kg	4.1 kg	4.1 kg

Materials

Pump housing	Grey cast iron (EN-GJL-200)
Impeller	Plastic (PPE - 30 % GF)
Pump shaft	Stainless steel (X30CR13)
Bearing	Carbon, metal impregnated

Terminal diagram

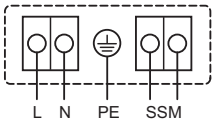

SSM:
Collective fault signal
(NC contact according to VDI 3814, load capacity 1 A, 250 V ~)

Approved fluids (other fluids on request)

Heating water (acc. to Hoval engineering guidelines resp. VDI 2035)

Water-glycol mixtures
(max. 1:1; above 20 % admixture, the pumping data must be checked)

Permitted field of application

Temperature range at max. ambient temperature +40 °C	-10 °C...+110 °C

Technical data / Pump curves

Stratos 25/10, 30/10, Stratos 25/12, 30/12

Pump curves

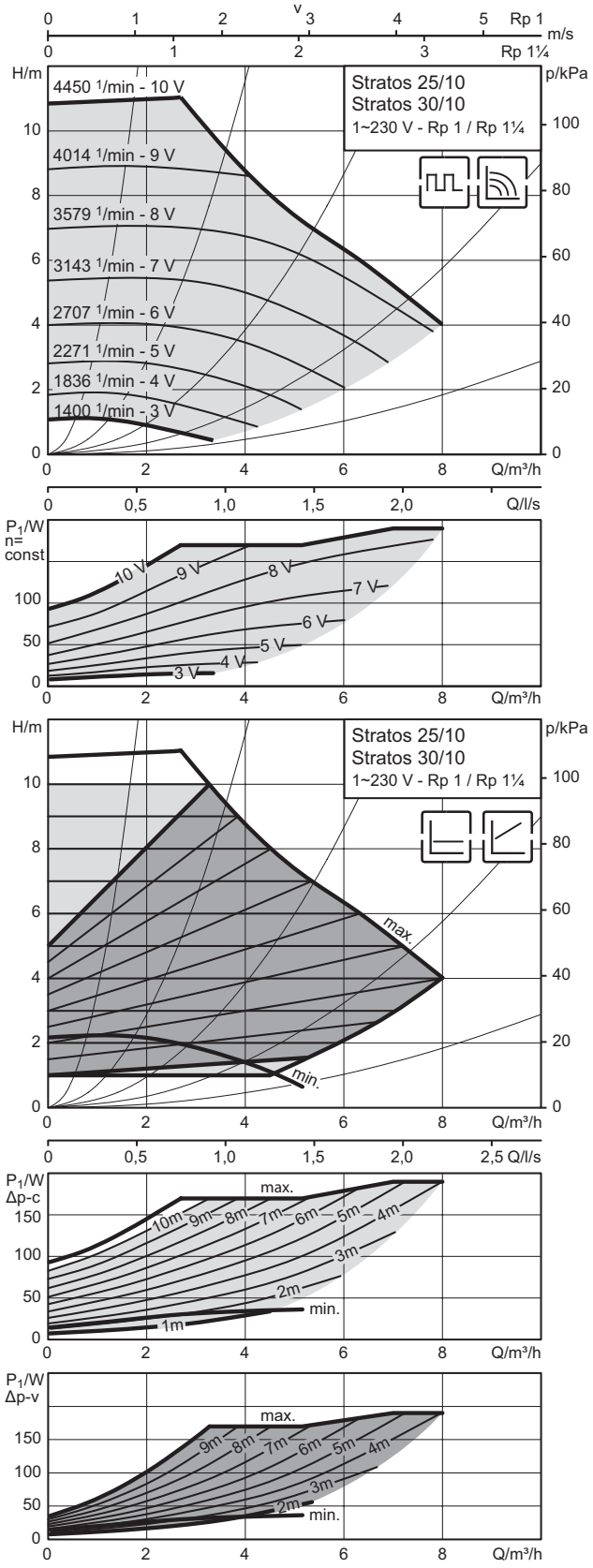

Pump curves

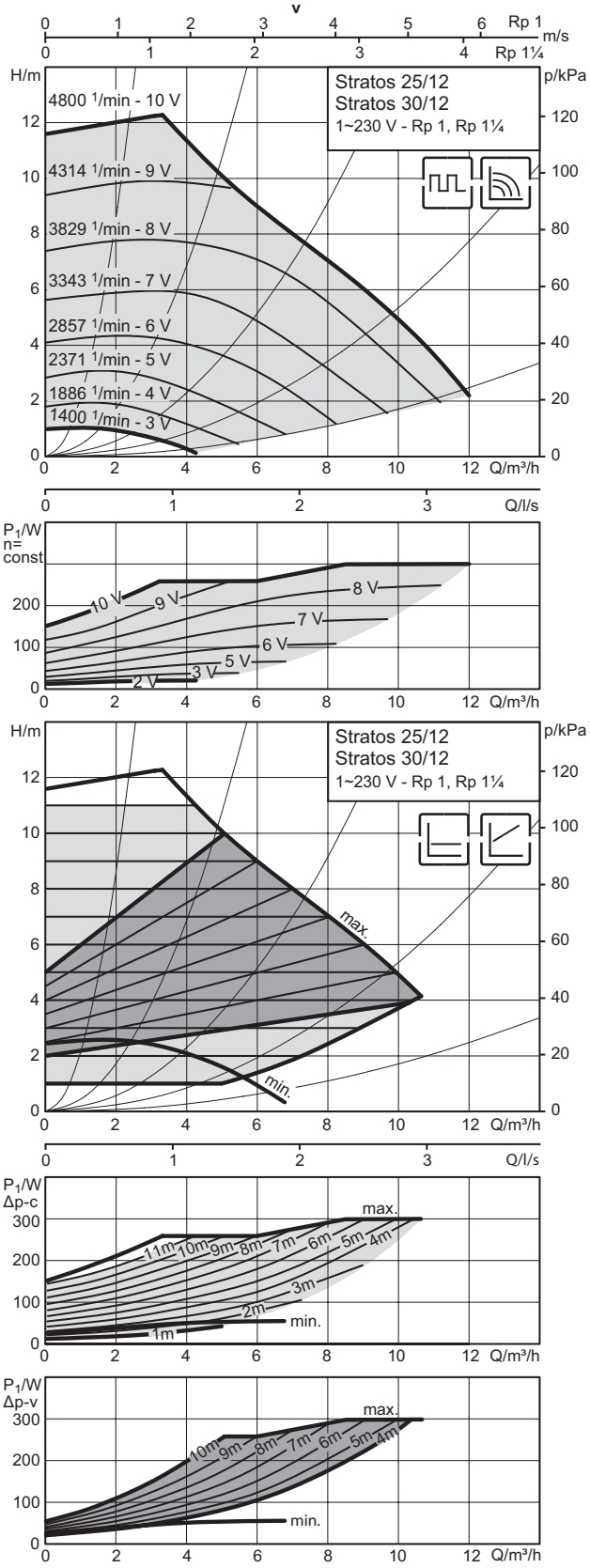

Technical data / Pump curves

Dimension drawing

Stratos 25/10

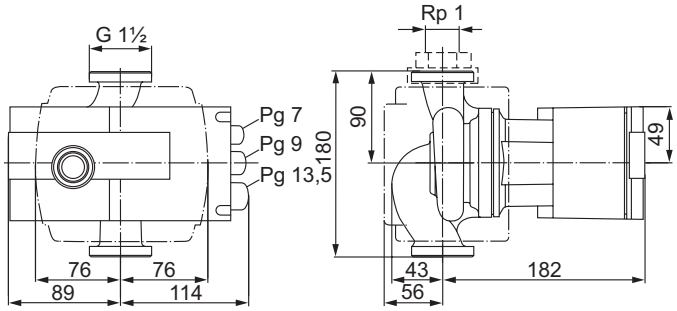

Dimension drawing

Stratos 25/12

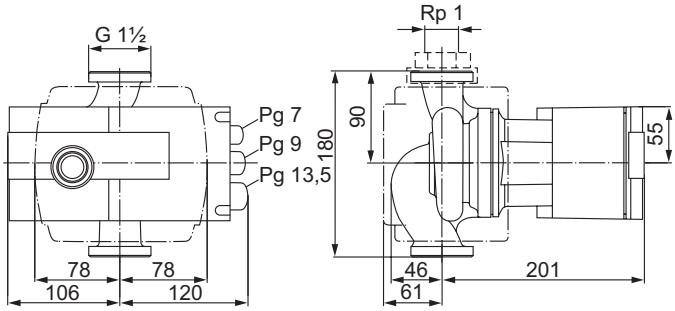

Dimension drawing

Stratos 30/10

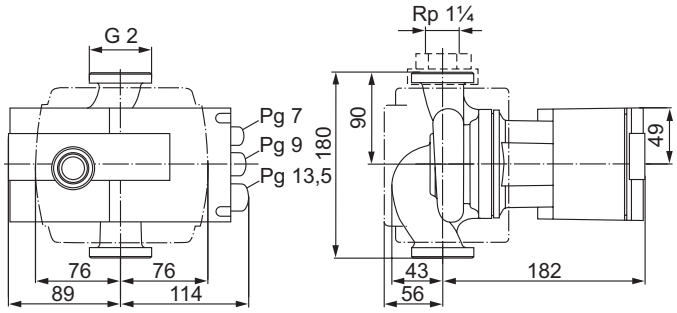

Dimension drawing

Stratos 30/12

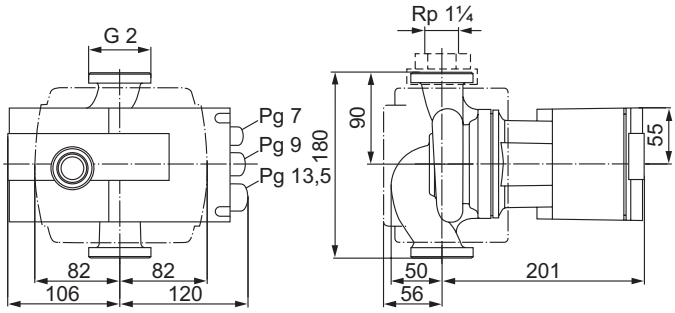

Technical data

Designation	Stratos 25/10	Stratos 25/12	Stratos 30/10	Stratos 30/12
Energy efficiency index (EEI)	≤ 0.20	≤ 0.20	≤ 0.20	≤ 0,20
Threaded pipe union	Rp 1	Rp 1	Rp 1¼	Rp 1¼
Rated pressure	PN 10	PN 10	PN 10	PN 10
Mains connection	1~230 V, 50/60 Hz	1~230 V, 50/60 Hz	1~230 V, 50/60 Hz	1~230 V, 50/60 Hz
Speed *n*	1400 - 4450 1/min	1400 - 4800 1/min	1400 - 4450 1/min	1400 - 4800 1/min
Rated power P_2	140 W	200 W	140 W	200 W
Power consumption P_1	9 - 190 W	12 - 300 W	9 - 190 W	12 - 300 W
Current consumption	0.13 - 1.30 A	0.22 - 1.32 A	0.13 - 1.30 A	0.22 - 1.32 A
Separate power relay with direct connection via 230 V required (applies to all TTE controller modules and module expansions)	NO	NO	NO	NO
Minimum suction head at 50/95/110 °C	3 / 10 / 16 m	3 / 10 / 16 m	3 / 10 / 16 m	3 / 10 / 16 m
Weight approx. *m*	4.1 kg	5.4 kg	4.2 kg	5.5 kg

Materials

Pump housing	Grey cast iron (EN-GJL-200)
Impeller	Plastic (PPE - 30 % GF)
Pump shaft	Stainless steel (X30CR13)
Bearing	Carbon, metal impregnated

Terminal diagram

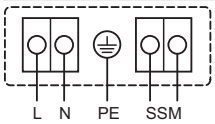

SSM:
Collective fault signal
(NC contact according to VDI 3814, load capacity 1 A, 250 V ~)

Approved fluids (other fluids on request)

Heating water (acc. to Hoval engineering guidelines resp. VDI 2035)

Water-glycol mixtures
(max. 1:1; above 20 % admixture, the pumping data must be checked)

Permitted field of application

Temperature range at max. ambient temperature +40 °C	-10 °C...+110 °C

Description

Stratos DN 32-100

- High-efficiency pump electronically controlled
- Circulating pump with minimum operating costs, for pipe installation
- Can be used for all HVAC and solar applications
- One-button manual operation level for:
  - Pump on/off
- Selecting the control mode:
  - Δp-c (differential pressure constant)
  - Δp-v (differential pressure variable)
  - Δp-T (differential pressure temperature-controlled) by means of IR-Monitor/ IR-Module/IR-Stick, Modbus, BACnet, LON or Canopen
  - Q-Limit to restrict the maximum volume flow (setting only via IR-Stick)
  - Manual control mode (setting constant speed)
  - Automatic setback operation (self-learning)
  - Setpoint and speed adjustment
- Graphical pump display for each pump, with rotatable display horizontal and vertical module mounting, for display of:
  - Operating state
  - Control mode
  - Differential pressure or rotation speed setpoint
  - Fault and warning signals
- Synchronous motor using ECM technology with very high efficiency and high starting torque, automatic deblocking function
- Fault signal light, potential-free collective fault signal, infrared interface for wireless communication with Wilo IR-Monitor/ IR-Stick operating and service device.
- 1 plug-in slot for Stratos IF-modules with interfaces for building automation (BA) or dual pump management
- Pump housing made of cast iron with cataphoretic coating, impeller made of glass-fibre reinforced plastic, stainless steel shaft with metal impregnated carbon plain bearings.
- Thermal insulation jacket made of EPP

ErP READY — APPLIES TO EUROPEAN DIRECTIVE FOR ENERGY RELATED PRODUCTS

Δp-v	Differential pressure variable
	Control signal / interface
Δp-c	Differential pressure constant

Motor
Voltage 1 x 230 V, frequency 50/60 Hz
Protection class IP X4D
Insulation class F
Integrated motor protection

Medium temperature
at max. ambient temperature
+40 °C: -10 °C...+110 °C

Connections
DN 32 - DN 100 with flange connections without counterflanges, screws and joints.
DN 32 - DN 65 incl. washers for flange screws (PN 6/10).

Design on request
Compensation pieces for adapting the installation length with replacement pumps see chapter “Type comparison”

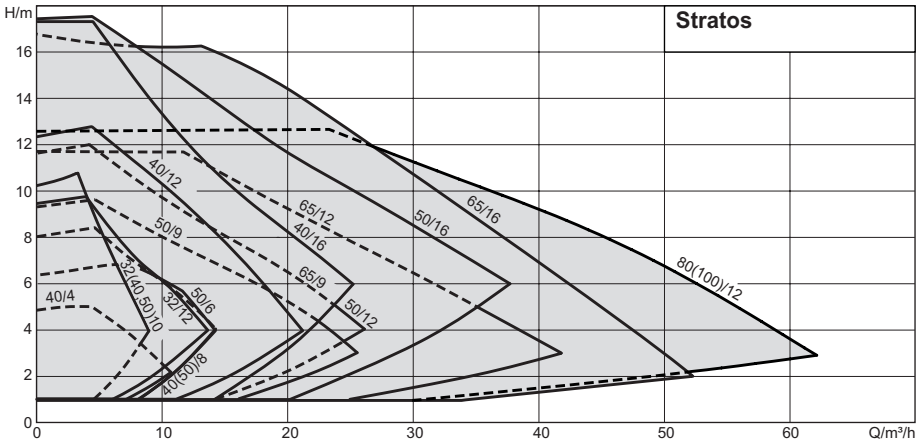

Part No.

Stratos DN 32-100 premium pump
with flange connections

Part No.

- High-efficiency premium pump, colour green with operating mode switch and LC display
- Slot for IF modules
- Without counterflanges, screws and joints
- Thermal insulation jacket

Medium temperature -10 °C...+110 °C

Wilo	Hoval					
Stratos	Nominal diameter DN	Delivery head mWC	Overall length mm	Rated pressure PN	EEI ≤	
32/1-10	32	10	220	6/10	0.20	2064 678
32/1-12	32	12	220	6/10	0.20	2064 679
40/1-4	40	4	220	6/10	0.20	2065 612
40/1-8	40	8	220	6/10	0.20	2064 680
40/1-10	40	10	220	6/10	0.20	2064 681
40/1-12	40	12	250	6/10	0.20	2064 682
40/1-16	40	16	250	6/10	0.20	2064 683
50/1-6	50	6	240	6/10	0.20	2064 684
50/1-8	50	8	240	6/10	0.20	2064 685
50/1-9	50	9	280	6/10	0.20	2038 000
50/1-10	50	10	240	6/10	0.20	2066 384
50/1-12	50	12	280	6/10	0.20	2064 686
50/1-16	50	16	340	6/10	0.20	2064 687
65/1-9	65	9	280	6/10	0.20	2064 688
65/1-12	65	12	340	6/10	0.20	2064 689
65/1-16	65	16	340	6/10	0.20	2064 690
80/1-12	80	12	360	6	0.20	2064 691
80/1-12	80	12	360	10	0.20	2064 692
100/1-12	100	12	360	6	0.20	2064 693
100/1-12	100	12	360	10	0.20	2064 694

Type key Hoval

Example	**Stratos 32/10 220**
Stratos	High-efficiency pump
32	Nominal diameter / Flange
10	Delivery head (mWC)
220	Overall length (mm)

Type key Wilo

Example	**Stratos 32/1-10**
32/	Nominal connection diameter
1-10	Nominal delivery head range (m)

Part No.

Accessories		Part No.

Welded-on flanges
2 welded-on flanges
Version in black incl. screws and joints.
Delivery with pump (separately packed)

DN	PN	
32	6	6041 213
40	6	6041 215
50	6	6041 217
65	6	6041 219
80	6	6041 221
100	6	6041 223
32	10	6041 214
40	10	6041 216
50	10	6041 218
65	10	6041 220
80	10	6041 222
100	10	6041 224

Sealing kit for flanges
Consisting of screws and seals.
Delivery with pump (separately packed).

DN	PN	
32	6	6041 271
40	6	6041 273
50	6	6041 275
65	6	6041 277
80	6	6041 279
100	6	6041 281
32	10/16	6041 272
40	10/16	6041 274
50	10/16	6041 276
65	10/16	6041 278
80	10/16	6041 280
100	10/16	6041 282

IR stick 2064 594
USB stick for wireless data exchange for Wilo pumps with infrared interface, adaptable to Windows laptops with USB interface. The IR stick, in connection with the provided software (CD-ROM), enables you to access and store pump data sets as well as send pre-defined pump settings.

IR monitor 2064 595
Operation and service unit for wireless remote control and remote diagnosis for wilo-pumps with infrared interface. Robust plastic housing with graphic display and 1-button operation.

Part No.

	Part No.
IF modules Retrofittable plug-in modules for extending the pump functions, for digital interfaces or for connection to the building management system	
Interfaces for TopTronic® E	
Interface Ext. Off / SBM	2064 604
Interface Ext. Off / 0-10 V	2064 601
Interface SBM / 0-10 V	2064 603
Interface Ext. Min / 0-10 V	2064 602
Interfaces for building automation	
Interface Modbus RTU	2064 596
Interface LON	2064 599
Interface CANopen	2064 598
Interface BACnet MS/TP	2064 597
Interface PLR	2064 600
Dual pump management (Modbus, BACnet, CANopen)	
Interface DP	2064 605

System component SB-R3K 16 A (relay) for universal use without casing Improved contact material AgSnO2 Relay with 3 switchover contacts max. 400 V/16 A, control voltage 230 V Consisting of: relay R3K support/snap track (8 cm) incl. fastenings for installation in boiler controller Control voltage 230 V Without housing	6044 844

■ Technical data / Pump curves

Stratos 32/10, 32/12

Pump curves

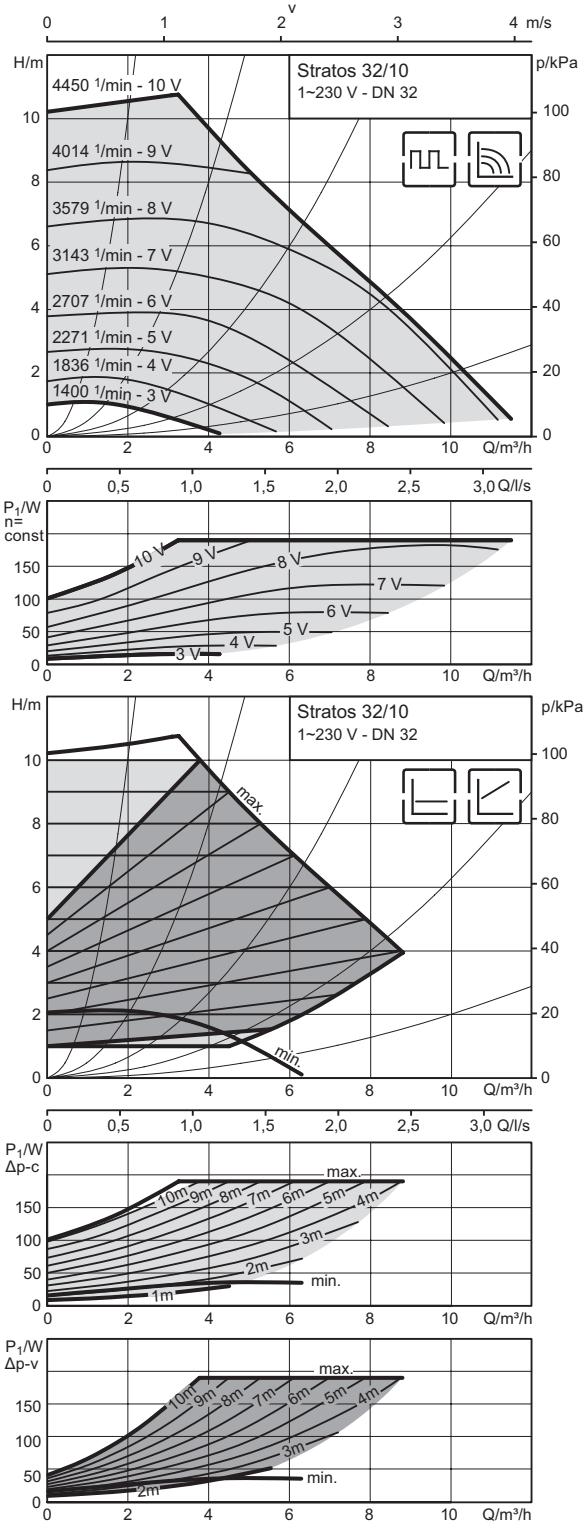

Pump curves

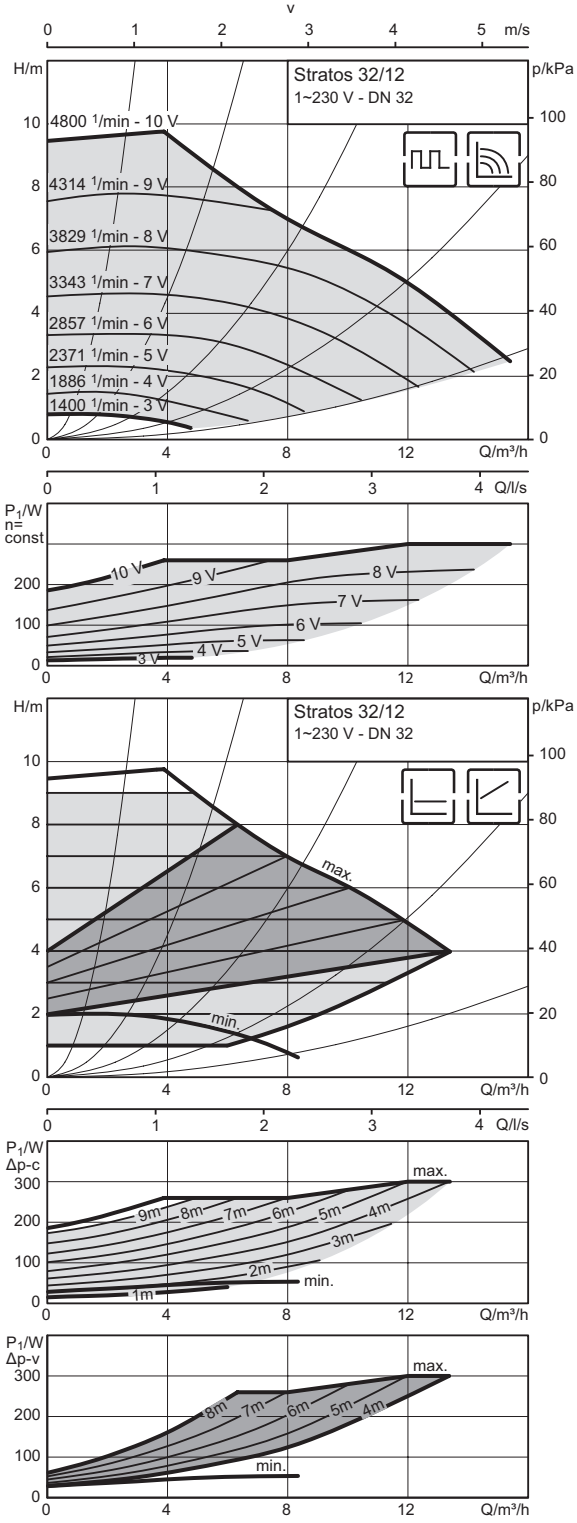

Technical data / Pump curves

Dimension drawing

Stratos 32/10

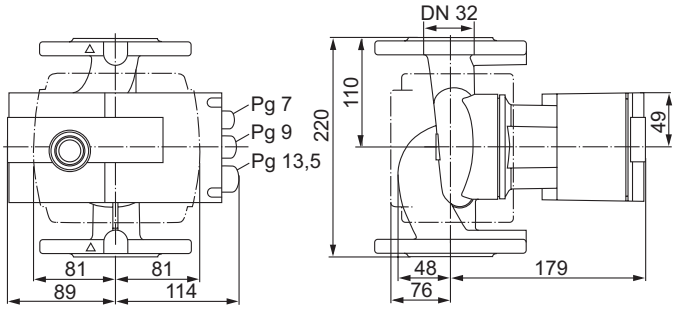

Dimension drawing

Stratos 32/12

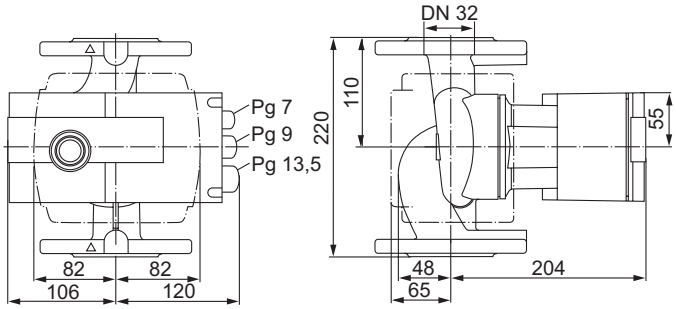

Dimension drawing, flange

PN 6/10

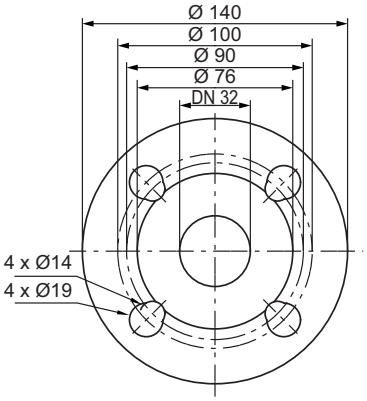

Technical data

Designation	Stratos 32/10	Stratos 32/12
Energy efficiency index (EEI)	≤ 0.20	≤ 0.20
Nominal flange diameter	DN 32	DN 32
Rated pressure	PN 6/10	PN 6/10
Mains connection	1~230 V, 50/60 Hz	1~230 V, 50/60 Hz
Speed *n*	1400 - 4450 1/min	1400 - 4800 1/min
Rated power P_2	140 W	200 W
Power consumption P_1	9 - 190 W	12 - 310 W
Current consumption I / Starting current [1]	0.13 - 1.30 A / 8 A	0.22 - 1.37 A / 8 A
Separate power relay with direct connection via 230 V required (applies to all TTE controller modules and module expansions)	NO	NO
Minimum suction head at 50/95/110 °C	3 / 10 / 16 m	3 / 10 / 16 m
Weight approx. *m*	7.6 kg	9 kg

Materials

Pump housing	Grey cast iron (EN-GJL-250)	
Impeller	Plastic (PPE - 30 % GF)	Plastic (PPS - 40 % GF)
Pump shaft	Stainless steel (X30CR13)	
Bearing	Carbon, metal impregnated	

[1] Note starting current

Terminal diagram

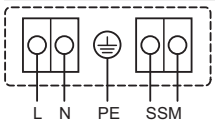

SSM:
Collective fault signal
(NC contact according to VDI 3814, load capacity 1 A, 250 V ~)

Approved fluids (other fluids on request)

Heating water (acc. to Hoval engineering guidelines resp. VDI 2035)

Water-glycol mixtures
(max. 1:1; above 20% admixture, the pumping data must be checked)

Permitted field of application

Temperature range at max. ambient temperature +40 °C	-10 °C...+110 °C

Technical data / Pump curves

Stratos 40/4, 40/8

Pump curves

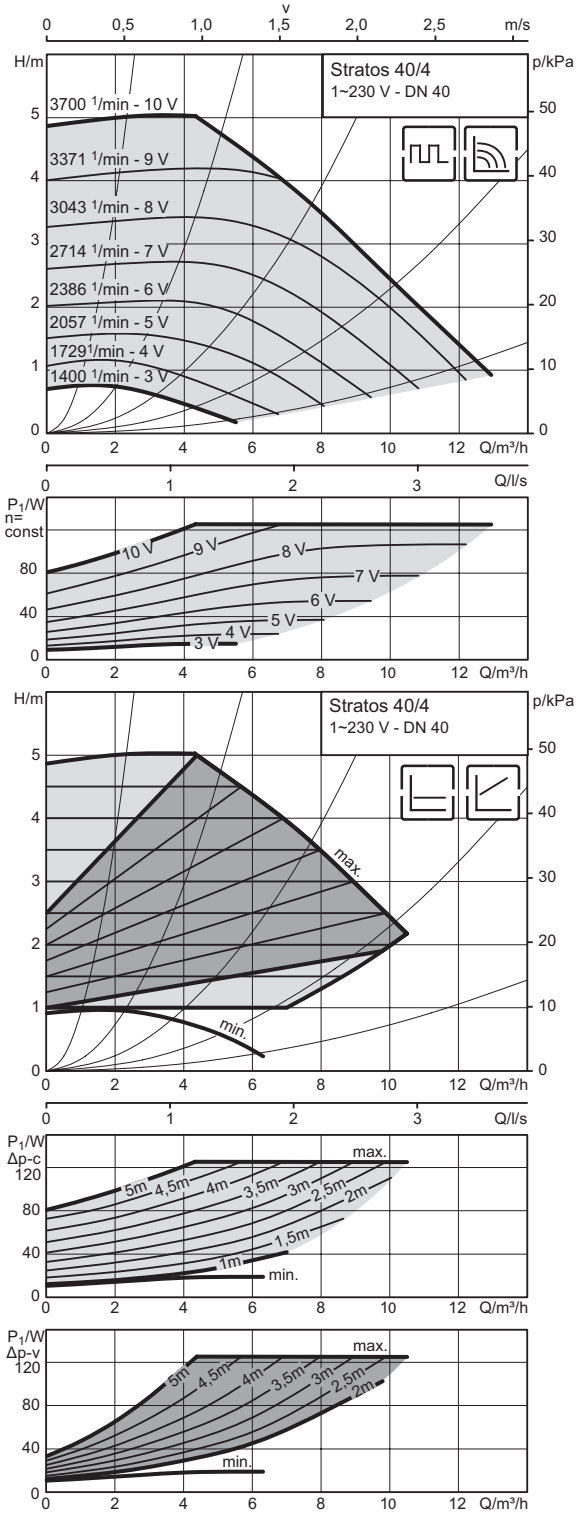

Pump curves

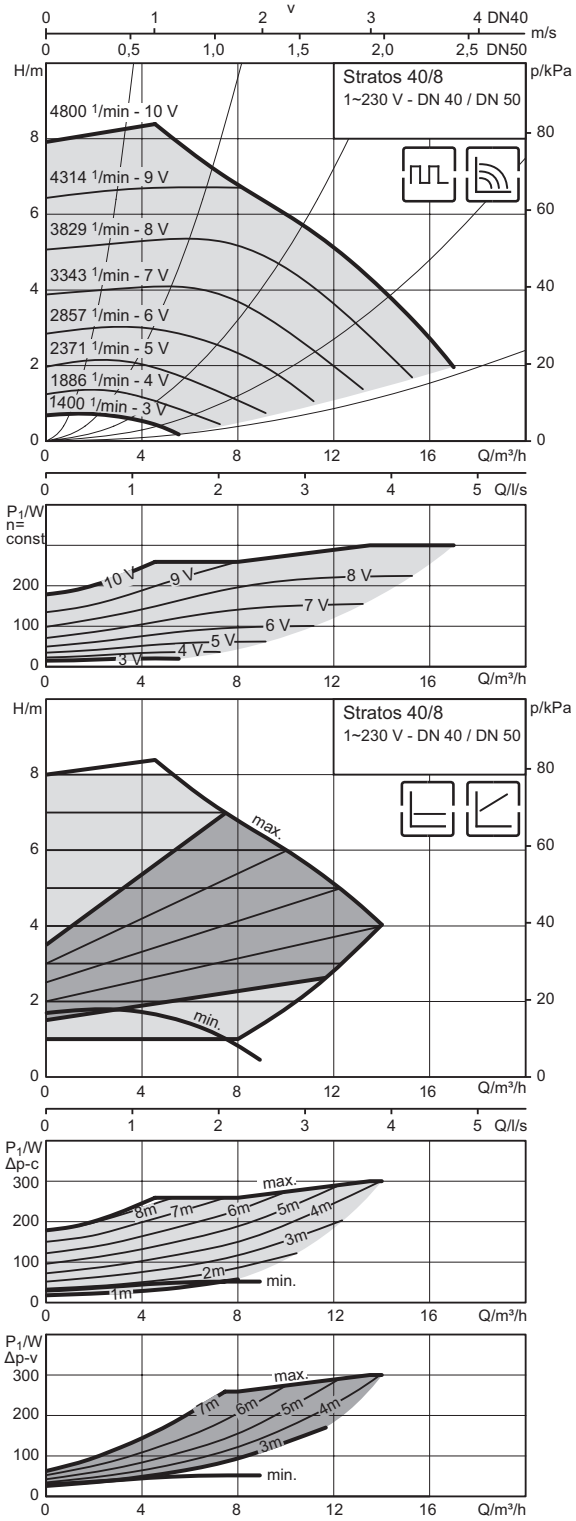

Technical data / Pump curves

Dimension drawing

Stratos 40/4

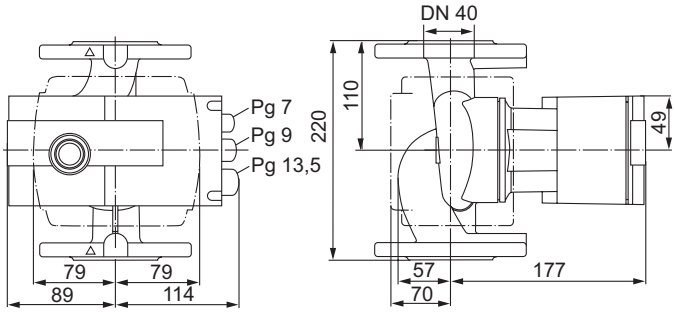

Dimension drawing

Stratos 40/8

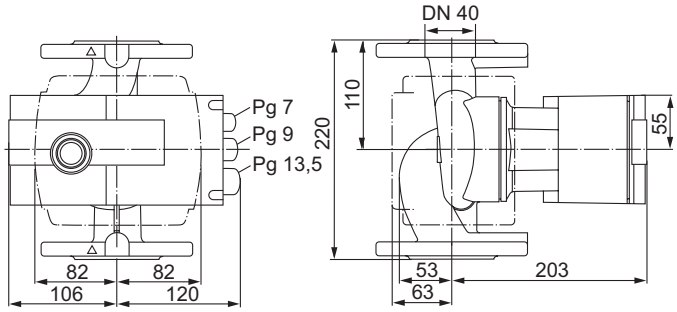

Dimension drawing, flange

PN 6/10

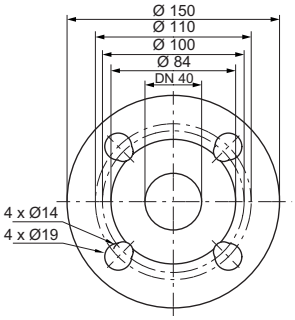

Technical data

Designation	Stratos 40/4	Stratos 40/8
Energy efficiency index (EEI)	≤ 0.20	≤ 0.20
Nominal flange diameter	DN 40	DN 40
Rated pressure	PN 6/10	PN 6/10
Mains connection	1~230 V, 50/60 Hz	1~230 V, 50/60 Hz
Speed *n*	1400 - 3700 1/min	1400 - 4800 1/min
Rated power P_2	200 W	200 W
Power consumption P_1	9 - 125 W	12 - 300 W
Current consumption I / Starting current [1]	0.13 - 1.10 A / 8 A	0.22 - 1.32 A / 8 A
Separate power relay with direct connection via 230 V required (applies to all TTE controller modules and module expansions)	NO	NO
Minimum suction head at 50/95/110 °C	3 / 10 / 16 m	3 / 10 / 16 m
Weight approx. *m*	8.3 kg	9.5 kg

Materials	
Pump housing	Grey cast iron (EN-GJL-250)
Impeller	Plastic (PPS - 40 % GF)
Pump shaft	Stainless steel (X30CR13)
Bearing	Carbon, metal impregnated

[1] Note starting current

Terminal diagram

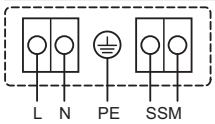

SSM:
Collective fault signal
(NC contact according to VDI 3814, load capacity 1 A, 250 V ~)

Approved fluids (other fluids on request)

Heating water (acc. to Hoval engineering guidelines resp. VDI 2035)

Water-glycol mixtures
(max. 1:1; above 20 % admixture, the pumping data must be checked)

Permitted field of application

Temperature range at max. ambient temperature +40 °C	-10 °C...+110 °C

Technical data / Pump curves

Stratos 40/10, 40/12

Pump curves

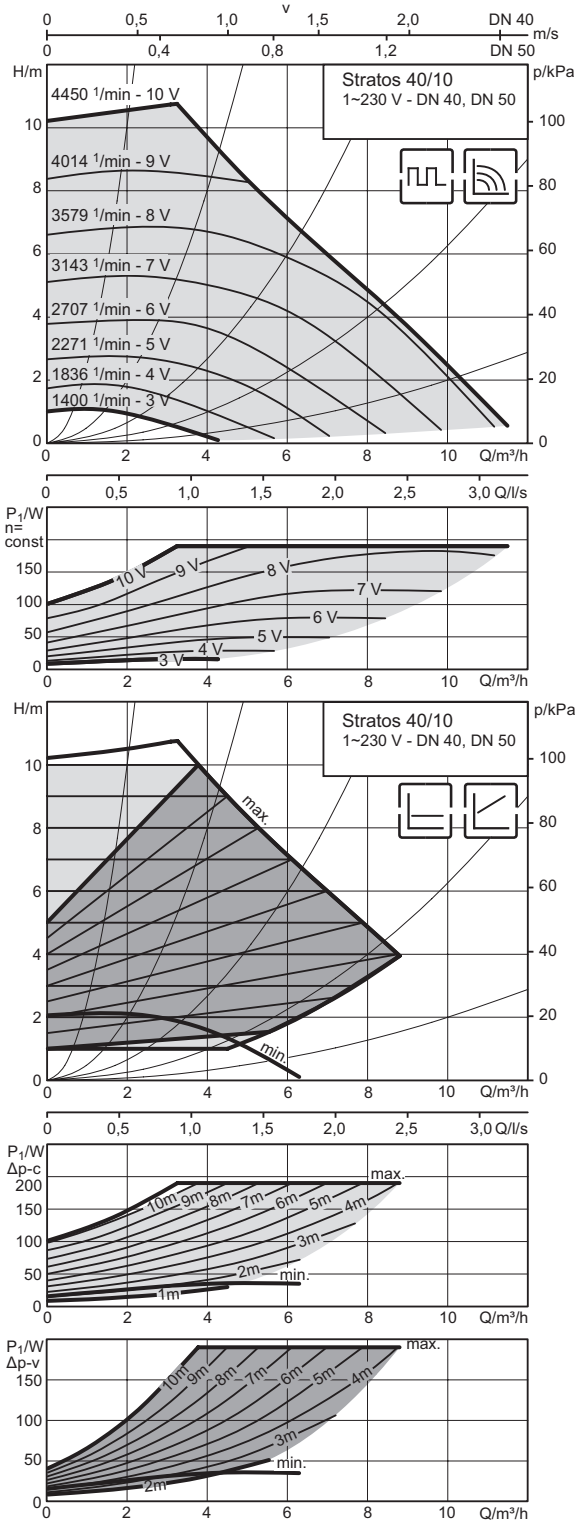

Pump curves

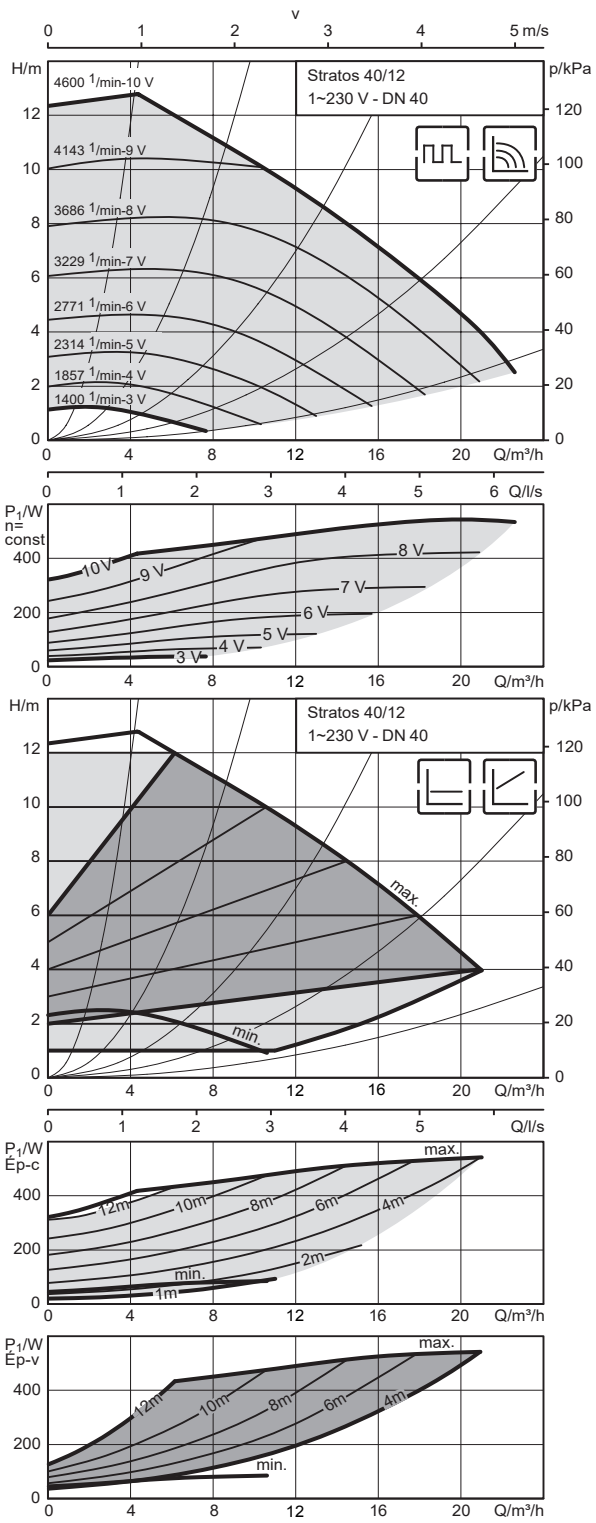

Technical data / Pump curves

Dimension drawing

Stratos 40/10

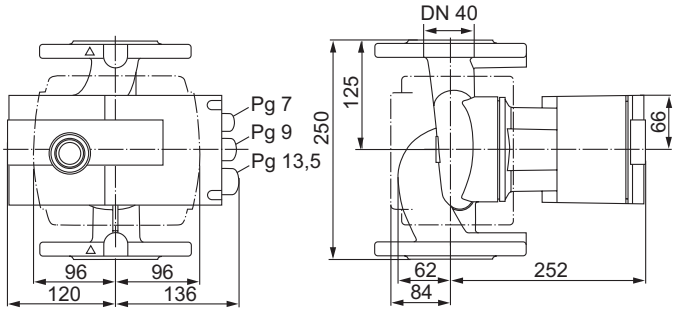

Dimension drawing

Stratos 40/12

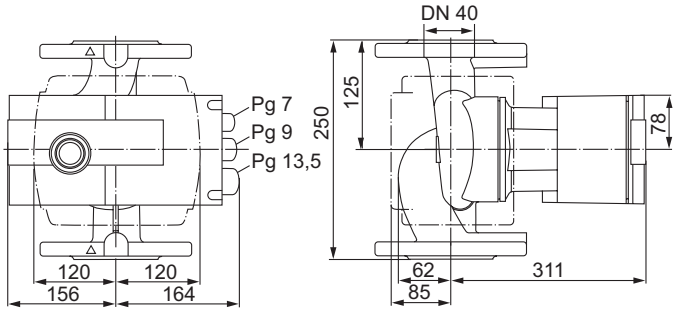

Dimension drawing, flange

PN 6/10

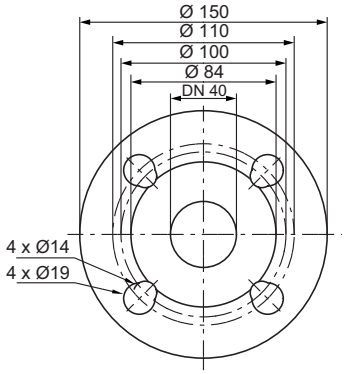

Technical data

Designation	Stratos 40/10	Stratos 40/12
Energy efficiency index (EEI)	≤ 0.20	≤ 0.20
Nominal flange diameter	DN 40	DN 40
Rated pressure	PN 6/10	PN 6/10
Mains connection	1~230 V, 50/60 Hz	1~230 V, 50/60 Hz
Speed *n*	1400 - 4450 1/min	1400 - 4600 1/min
Rated power P_2	140 W	450 W
Power consumption P_1	9 - 190 W	25 - 550 W
Current consumption I / Starting current [1]	0.13 - 1.30 A / 8 A	0.20 - 2.40 A / 8 A
Separate power relay with direct connection via 230 V required (applies to all TTE controller modules and module expansions)	NO	NO
Minimum suction head at 50/95/110 °C	3 / 10 / 16 m	5 / 12 / 18 m
Weight approx. *m*	7.8 kg	14 kg

Materials		
Pump housing	Grey cast iron (EN-GJL-250)	
Impeller	Plastic (PPE - 30 % GF)	Plastic (PPS - 40 % GF)
Pump shaft	Stainless steel (X30CR13)	Stainless steel (X30Cr13/X46Cr13)
Bearing	Carbon, metal impregnated	

[1] Note starting current

Terminal diagram

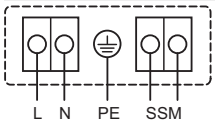

SSM:
Collective fault signal
(NC contact according to VDI 3814, load capacity 1 A, 250 V ~)

Approved fluids (other fluids on request)

Heating water (acc. to Hoval engineering guidelines resp. VDI 2035)

Water-glycol mixtures
(max. 1:1; above 20 % admixture, the pumping data must be checked)

Permitted field of application

Temperature range at max. ambient temperature +40 °C	-10 °C...+110 °C

■ Technical data / Pump curves

Stratos 40/16

Pump curves

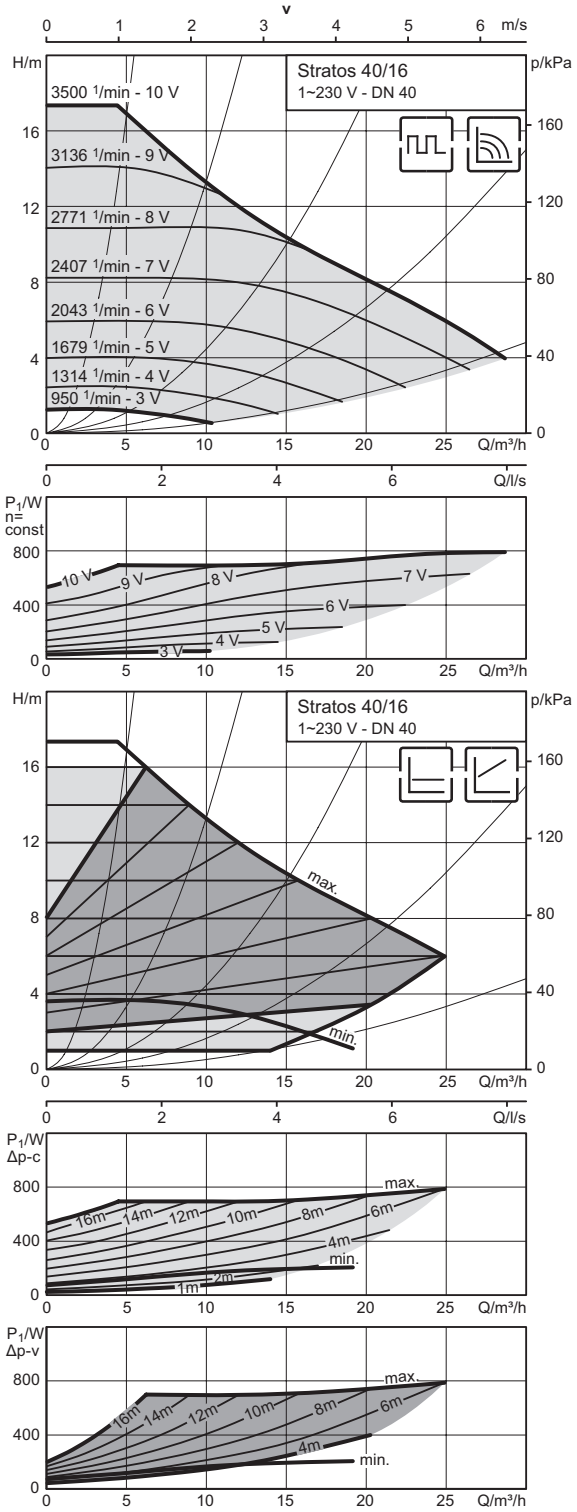

Technical data / Pump curves

Dimension drawing

Stratos 40/16

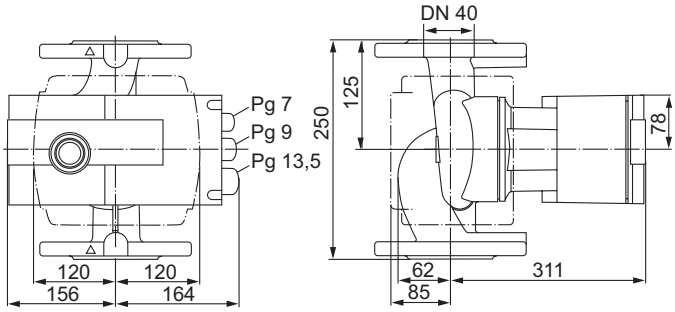

Dimension drawing, flange

PN 6/10

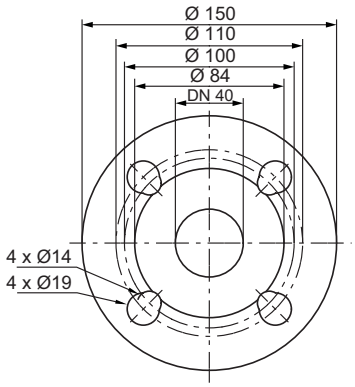

Technical data

Designation	Stratos 40/16
Energy efficiency index (EEI)	≤ 0.20
Nominal flange diameter	DN 40
Rated pressure	PN 6/10
Mains connection	1~230 V, 50/60 Hz
Speed *n*	950 - 3500 1/min
Rated power P_2	650 W
Power consumption P_1	35 - 800 W
Current consumption I / Starting current [1]	0.30 - 3.50 A / 16 A
Separate power relay with direct connection via 230 V required (applies to all TTE controller modules and module expansions)	YES
Minimum suction head at 50/95/110 °C	7 / 15 / 23 m
Weight approx. *m*	23.5 kg

Materials	
Pump housing	Grey cast iron (EN-GJL-250)
Impeller	Plastic (PPE - 30 % GF)
Pump shaft	Stainless steel (X30Cr13/X46Cr13)
Bearing	Carbon, metal impregnated

[1] Note starting current

Terminal diagram

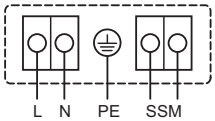

SSM:
Collective fault signal
(NC contact according to VDI 3814, load capacity 1 A, 250 V ~)

Approved fluids (other fluids on request)

Heating water (acc. to Hoval engineering guidelines resp. VDI 2035)

Water-glycol mixtures
(max. 1:1; above 20 % admixture, the pumping data must be checked)

Permitted field of application

Temperature range at max. ambient temperature +40 °C	-10 °C...+110 °C

Technical data / Pump curves

Stratos 50/6, 50/8

Pump curves

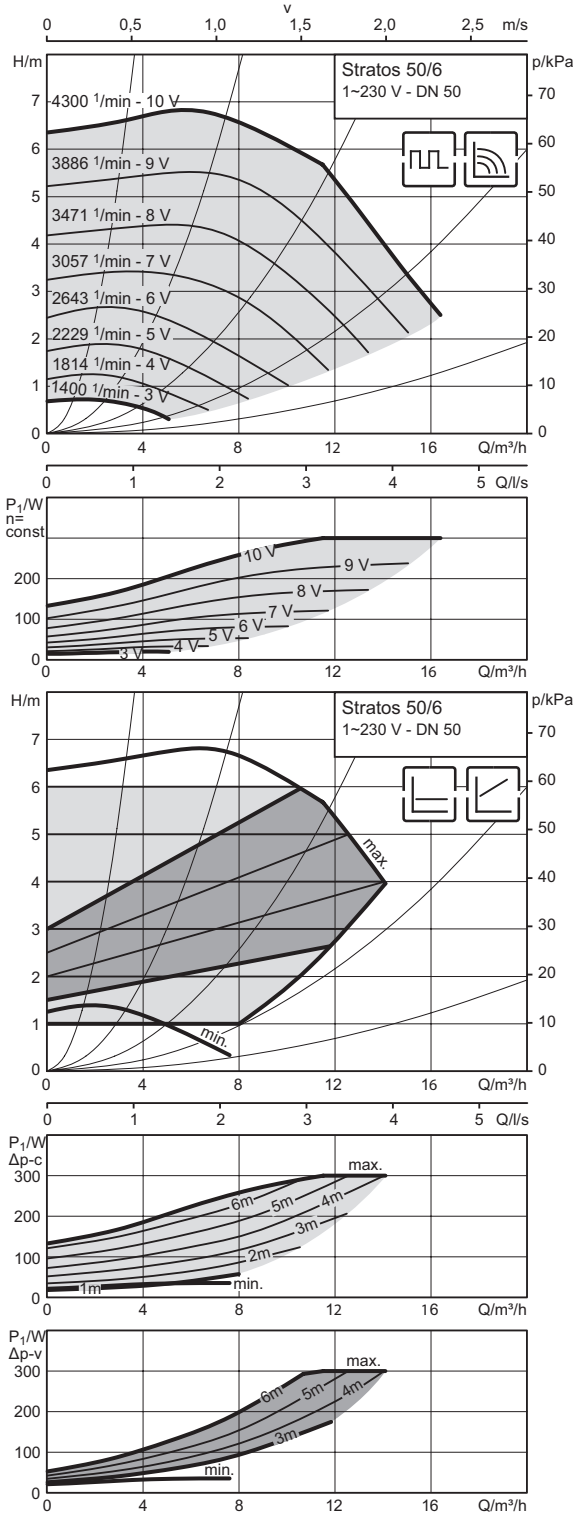

Pump curves

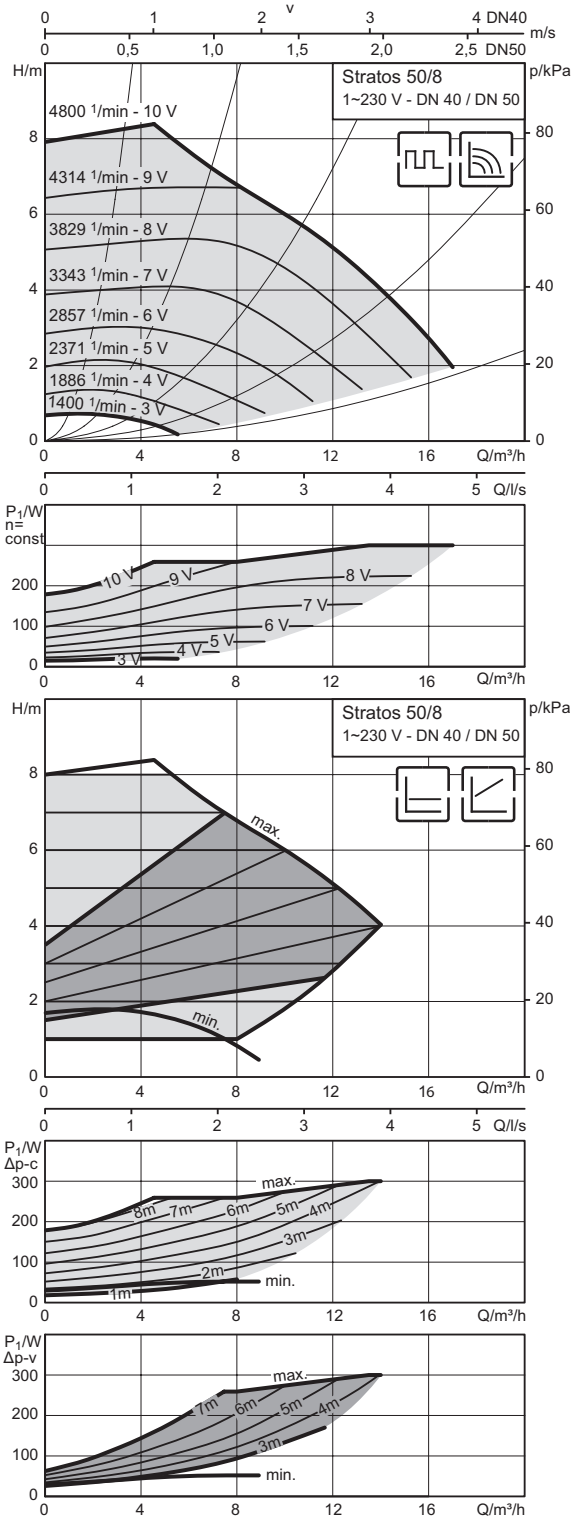

Technical data / Pump curves

Dimension drawing

Stratos 50/6

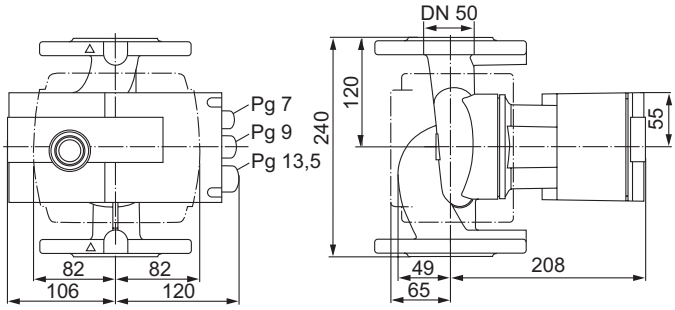

Dimension drawing

Stratos 50/8

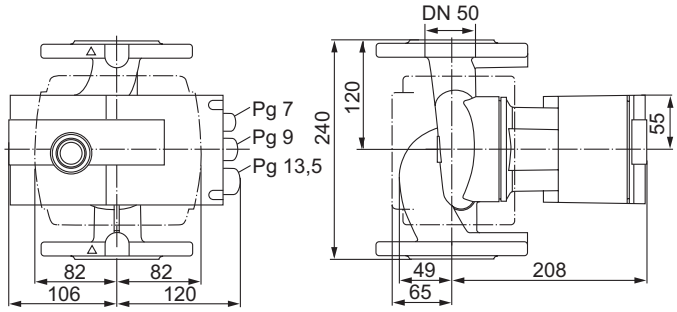

Dimension drawing, flange

PN 6/10

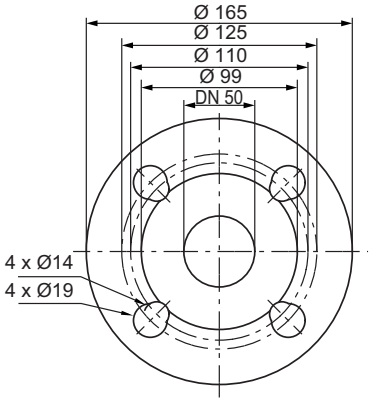

Technical data

Designation	Stratos 50/6	Stratos 50/8
Energy efficiency index (EEI)	≤ 0.20	≤ 0.20
Nominal flange diameter	DN 50	DN 50
Rated pressure	PN 6/10	PN 6/10
Mains connection	1~230 V, 50/60 Hz	1~230 V, 50/60 Hz
Speed *n*	1400 - 4800 1/min	1400 - 4800 1/min
Rated power P_2	200 W	200 W
Power consumption P_1	12 - 310 W	12 - 300 W
Current consumption I / Starting current [1]	0.22 - 1.37 A / 8 A	0.22 - 1.32 A / 8 A
Separate power relay with direct connection via 230 V required (applies to all TTE controller modules and module expansions)	NO	NO
Minimum suction head at 50/95/110 °C	3 / 10 / 16 m	3 / 10 / 16 m
Weight approx. *m*	10.6 kg	10.6 kg

Materials

Pump housing	Grey cast iron (EN-GJL-250)
Impeller	Plastic (PPS - 40 % GF)
Pump shaft	Stainless steel (X30CR13)
Bearing	Carbon, metal impregnated

[1] Note starting current

Terminal diagram

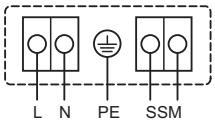

SSM:
Collective fault signal
(NC contact according to VDI 3814, load capacity 1 A, 250 V ~)

Approved fluids (other fluids on request)

Heating water (acc. to Hoval engineering guidelines resp. VDI 2035)

Water-glycol mixtures
(max. 1:1; above 20 % admixture, the pumping data must be checked)

Permitted field of application

Temperature range at max. ambient temperature +40 °C	-10 °C...+110 °C

Technical data / Pump curves

Stratos 50/9, 50/10

Pump curves

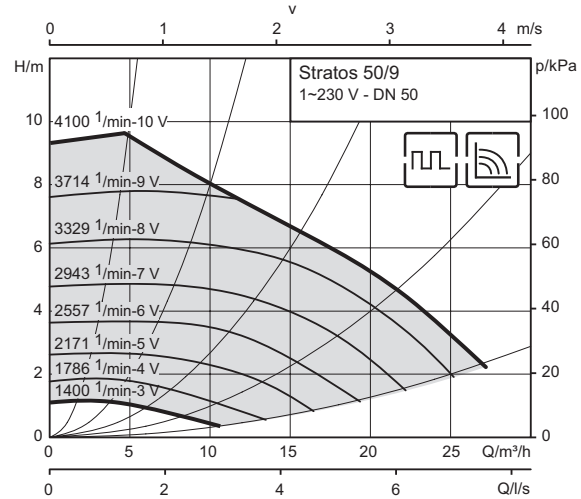

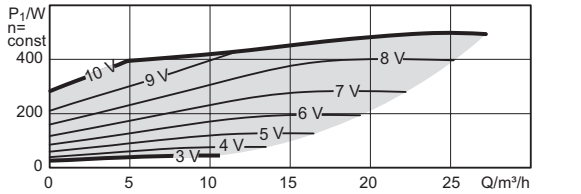

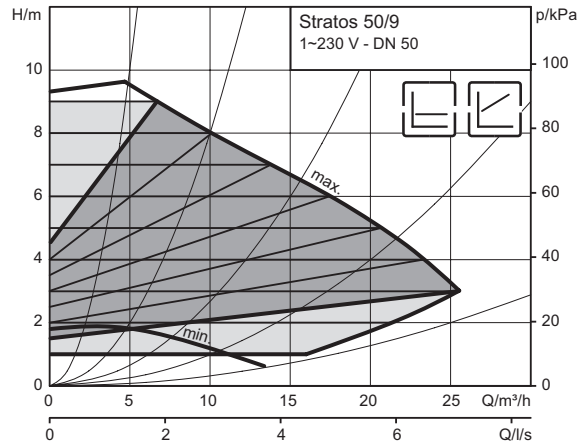

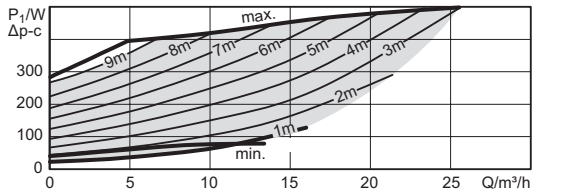

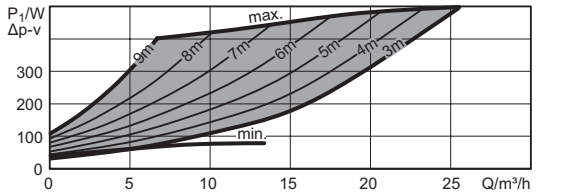

Pump curves

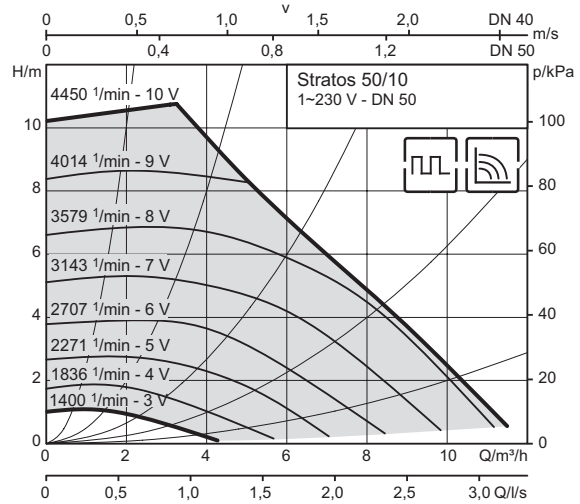

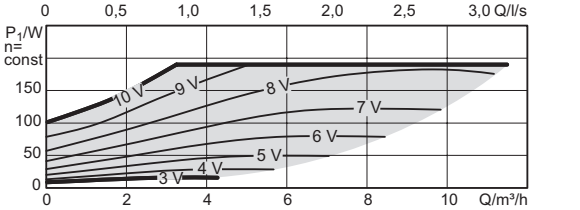

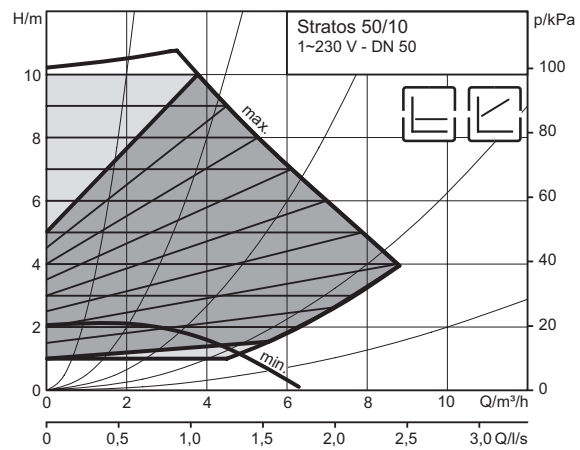

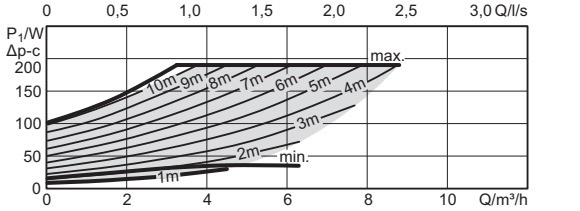

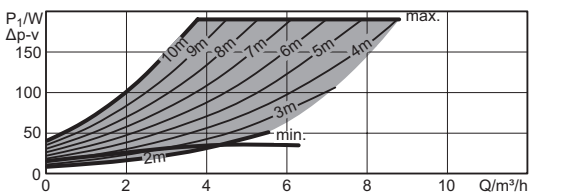

Technical data / Pump curves

Dimension drawing

Stratos 50/9

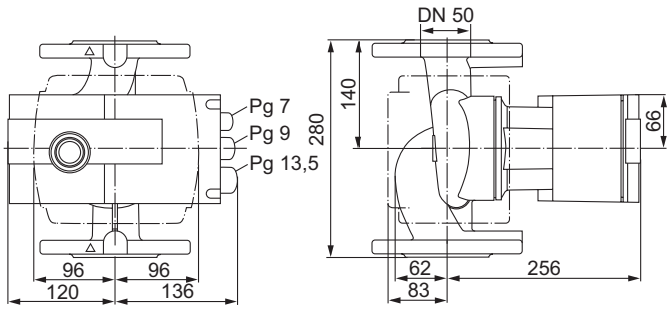

Dimension drawing

Stratos 50/10

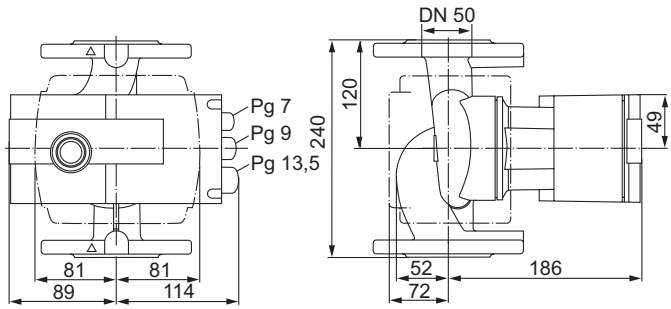

Dimension drawing, flange

PN 6/10

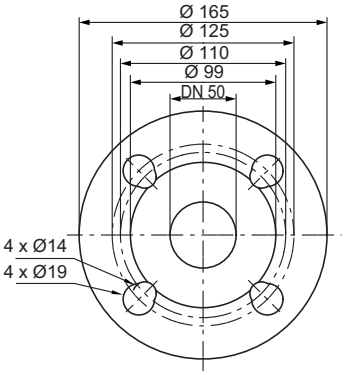

Technical data

Designation	Stratos 50/9	Stratos 50/10
Energy efficiency index (EEI)	≤ 0.20	≤ 0.20
Nominal flange diameter	DN 50	DN 50
Rated pressure	PN 6/10	PN 6/10
Mains connection	1~230 V, 50/60 Hz	1~230 V, 50/60 Hz
Speed *n*	1400 - 4100 1/min	1400 - 4450 1/min
Rated power P_2	400 W	140 W
Power consumption P_1	25 - 490 W	9 - 190 W
Current consumption I / Starting current [1]	0.20 - 2.15 A / 8 A	0.13 - 1.30 A / 8 A
Separate power relay with direct connection via 230 V required (applies to all TTE controller modules and module expansions)	NO	NO
Minimum suction head at 50/95/110 °C	5 / 12 / 18 m	3 / 10 / 16 m
Weight approx. *m*	15.5 kg	8.4 kg

Materials		
Pump housing	Grey cast iron (EN-GJL-250)	
Impeller	Plastic (PPS - 40 % GF)	Plastic (PPE - 30 % GF)
Pump shaft	Stainless steel (X30Cr13/X46Cr13)	Stainless steel (X30CR13)
Bearing	Carbon, metal impregnated	

[1] Note starting current

Terminal diagram

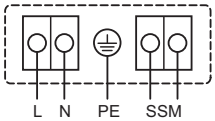

SSM:
Collective fault signal
(NC contact according to VDI 3814, load capacity 1 A, 250 V ~)

Approved fluids (other fluids on request)

Heating water (acc. to Hoval engineering guidelines resp. VDI 2035)

Water-glycol mixtures
(max. 1:1; above 20 % admixture, the pumping data must be checked)

Permitted field of application

Temperature range at max. ambient temperature +40 °C	-10 °C...+110 °C

■ Technical data / Pump curves

Stratos 50/12, 50/16

Pump curves

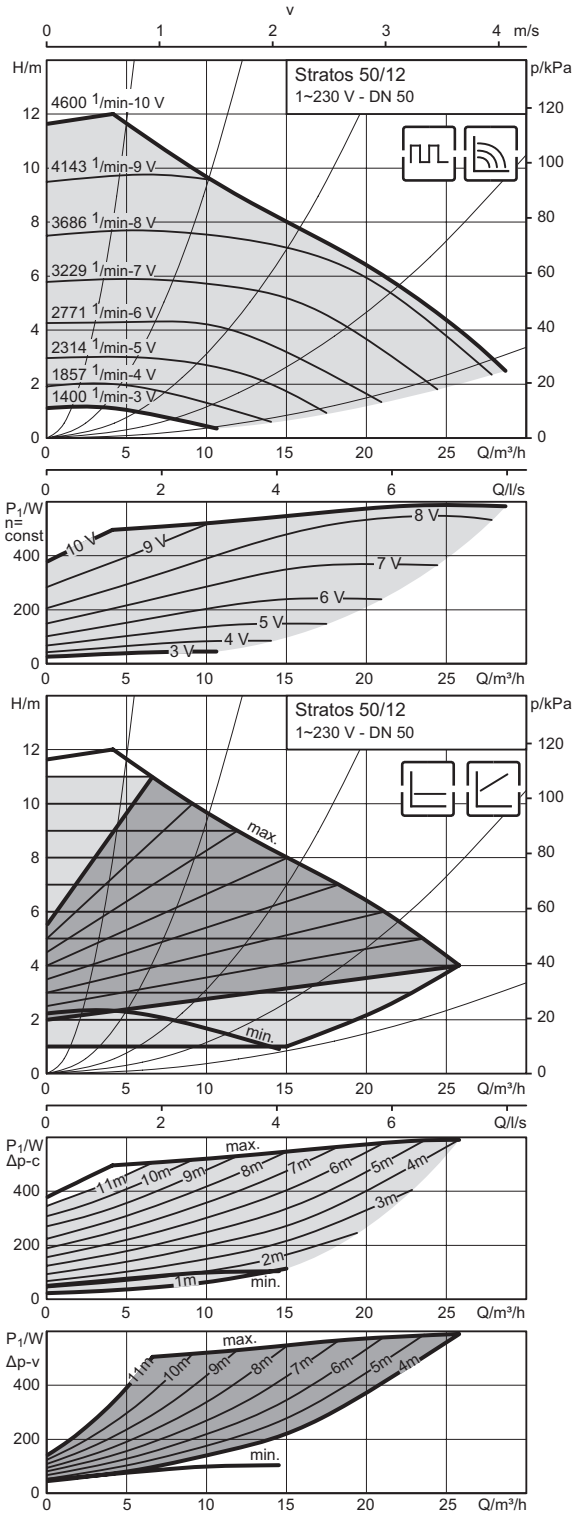

Pump curves

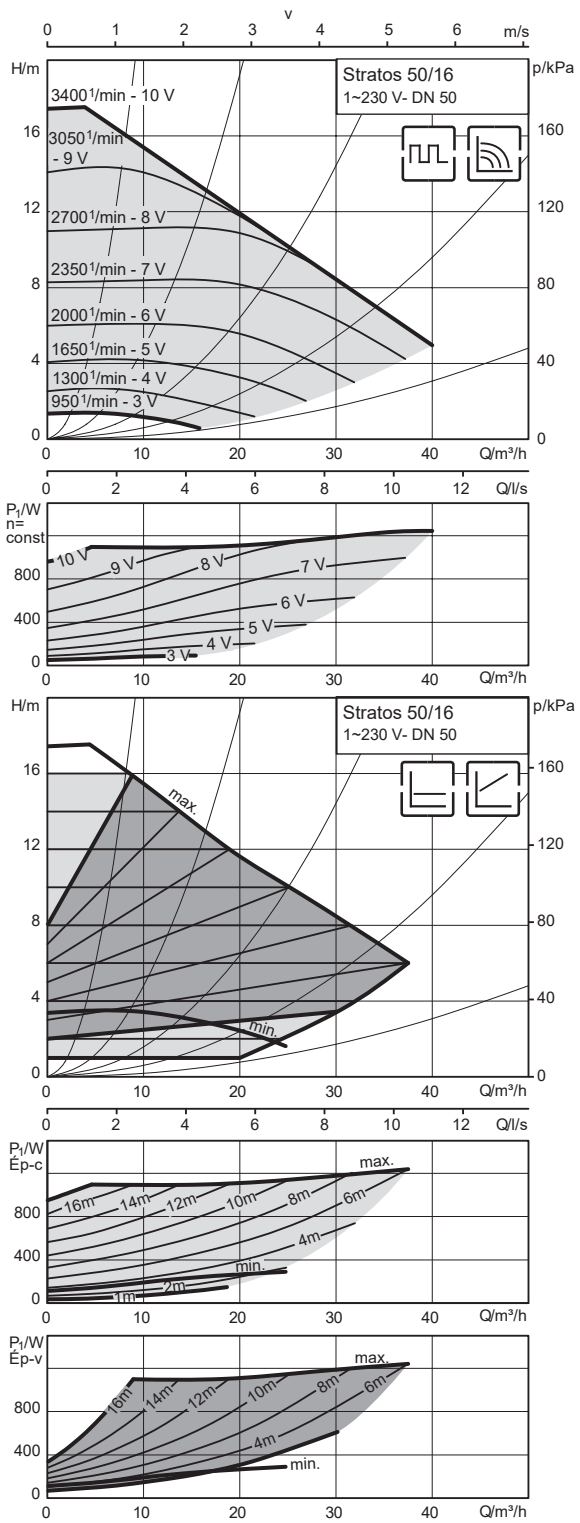

Technical data / Pump curves

Dimension drawing

Stratos 50/12

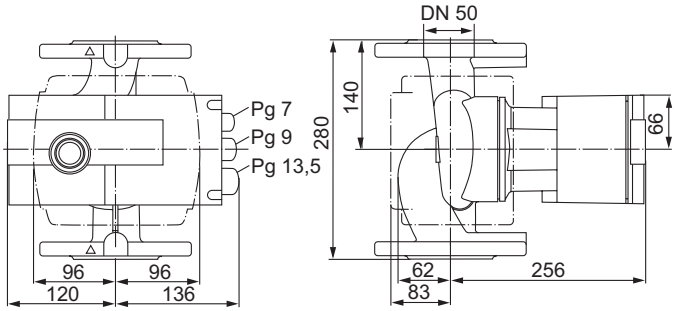

Dimension drawing

Stratos 50/16

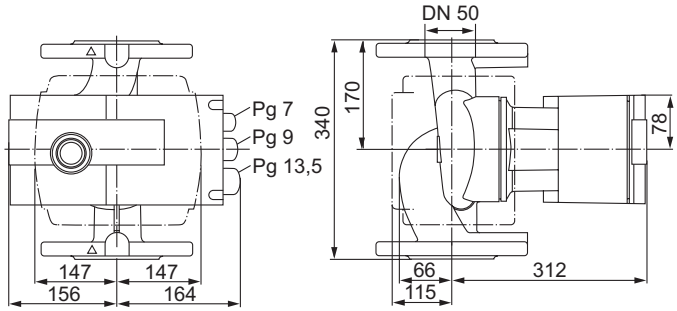

Dimension drawing, flange

PN 6/10

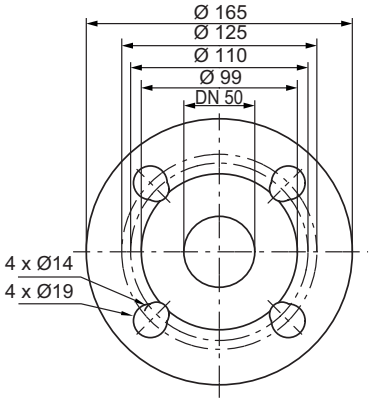

Dimension drawing, flange

PN 6/10

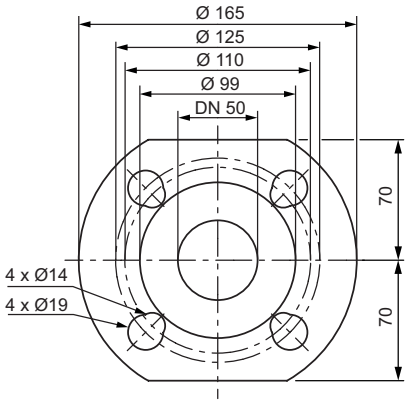

Technical data

Designation	Stratos 50/12	Stratos 50/16
Energy efficiency index (EEI)	≤ 0.20	≤ 0.20
Nominal flange diameter	DN 50	DN 50
Rated pressure	PN 6/10	PN 6/10
Mains connection	1~230 V, 50/60 Hz	1~230 V, 50/60 Hz
Speed *n*	1400 - 4600 1/min	950 - 3400 1/min
Rated power P_2	500 W	1050 W
Power consumption P_1	25 - 590 W	40 - 1250 W
Current consumption I / Starting current [1]	0.20 - 2.60 A / 8 A	0.30 - 5.50 A / 16 A
Separate power relay with direct connection via 230 V required (applies to all TTE controller modules and module expansions)	NO	YES
Minimum suction head at 50/95/110 °C	5 / 12 / 18 m	7 / 15 / 23 m
Weight approx. *m*	15.9 kg	26.5 kg

Materials

Pump housing	Grey cast iron (EN-GJL-250)	
Impeller	Plastic (PPS - 40 % GF)	Plastic (PPE - 30 % GF)
Pump shaft	Stainless steel (X30Cr13/X46Cr13)	
Bearing	Carbon, metal impregnated	

[1] Note starting current

Terminal diagram

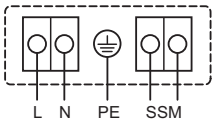

SSM:
Collective fault signal
(NC contact according to VDI 3814, load capacity 1 A, 250 V ~)

Approved fluids (other fluids on request)

Heating water (acc. to Hoval engineering guidelines resp. VDI 2035)

Water-glycol mixtures
(max. 1:1; above 20 % admixture, the pumping data must be checked)

Permitted field of application

Temperature range at max. ambient temperature +40 °C	-10 °C...+110 °C

■ Technical data / Pump curves

Stratos 65/9, 65/12

Pump curves

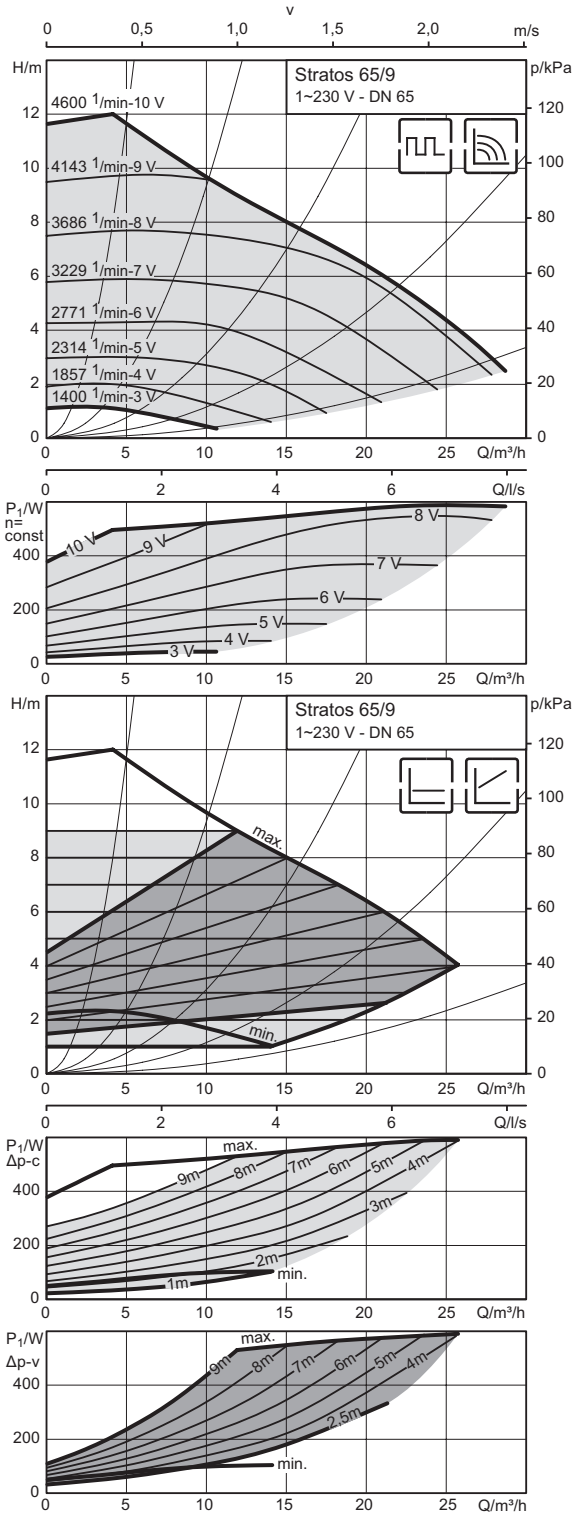

Pump curves

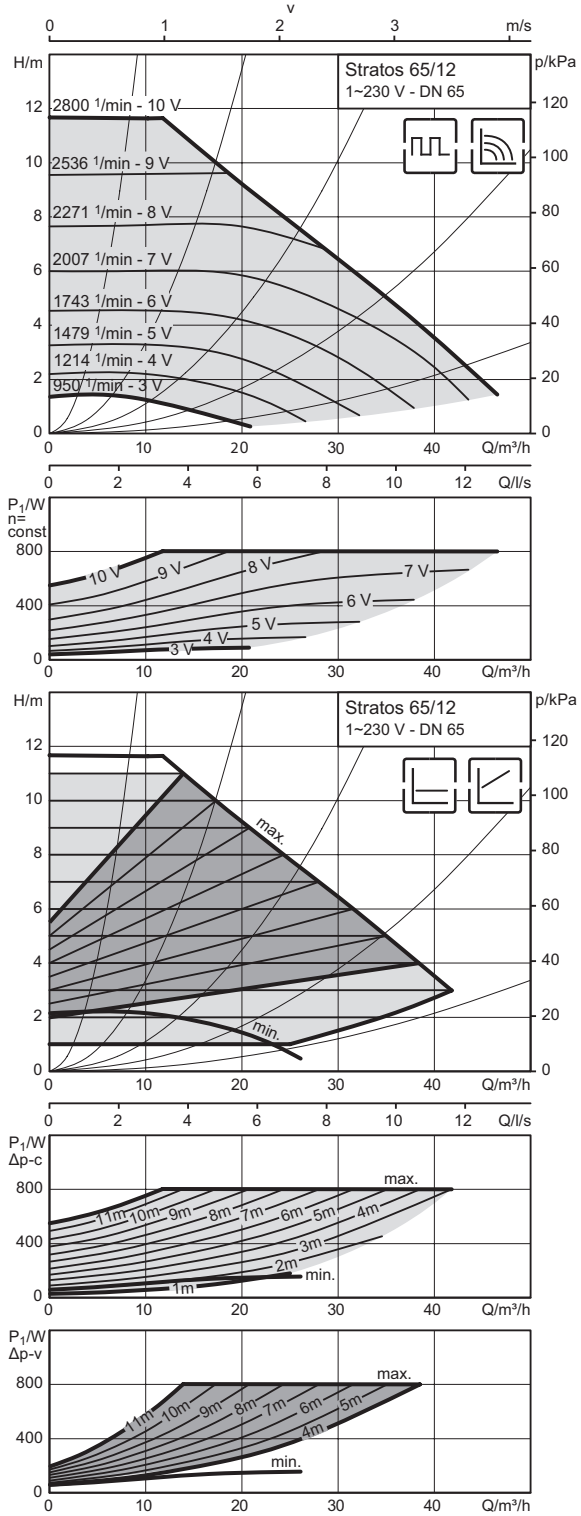

Technical data / Pump curves

Dimension drawing

Stratos 65/9

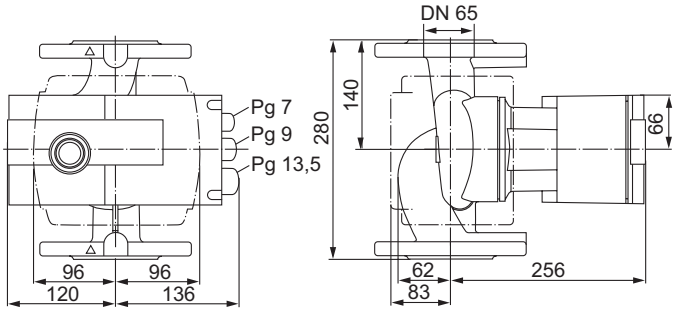

Dimension drawing

Stratos 65/12

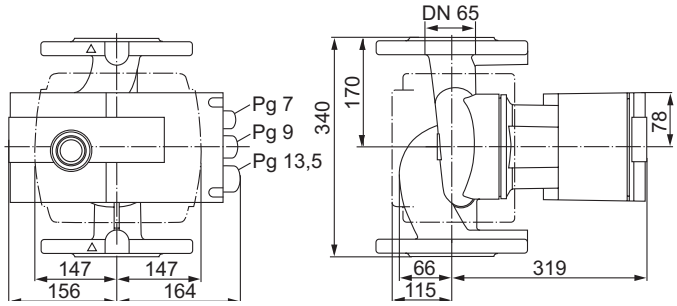

Dimension drawing, flange

PN 6/10

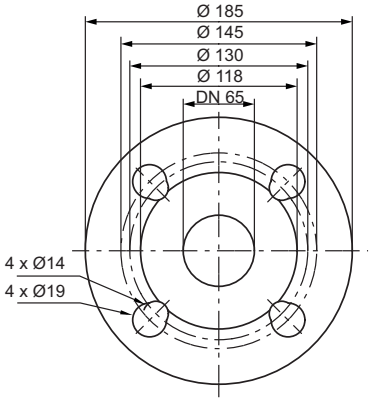

Dimension drawing, flange

PN 6/10

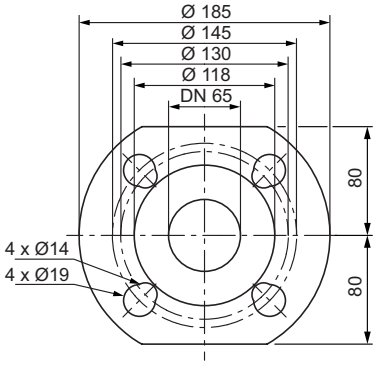

Technical data

Designation	Stratos 65/9	Stratos 65/12
Energy efficiency index (EEI)	≤ 0.20	≤ 0.20
Nominal flange diameter	DN 65	DN 65
Rated pressure	PN 6/10	PN 6/10
Mains connection	1~230 V, 50/60 Hz	1~230 V, 50/60 Hz
Speed *n*	1400 - 4600 1/min	950 - 2800 1/min
Rated power P_2	500 W	650 W
Power consumption P_1	25 - 590 W	38 - 800 W
Current consumption I / Starting current [1]	0.20 - 2.60 A / 8 A	0.30 - 3.50 A / 16 A
Separate power relay with direct connection via 230 V required (applies to all TTE controller modules and module expansions)	NO	YES
Minimum suction head at 50/95/110 °C	5 / 12 / 18 m	7 / 15 / 23 m
Weight approx. *m*	18 kg	27.2 kg

Materials

Pump housing	Grey cast iron (EN-GJL-250)	
Impeller	Plastic (PPS - 40 % GF)	Plastic (PPE - 30 % GF)
Pump shaft	Stainless steel (X30Cr13/X46Cr13)	
Bearing	Carbon, metal impregnated	

[1] Note starting current

Terminal diagram

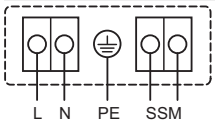

SSM:
Collective fault signal
(NC contact according to VDI 3814, load capacity 1 A, 250 V ~)

Approved fluids (other fluids on request)

Heating water (acc. to Hoval engineering guidelines resp. VDI 2035)

Water-glycol mixtures
(max. 1:1; above 20 % admixture, the pumping data must be checked)

Permitted field of application

Temperature range at max. ambient temperature +40 °C	-10 °C...+110 °C

Technical data / Pump curves

Stratos 65/16

Pump curves

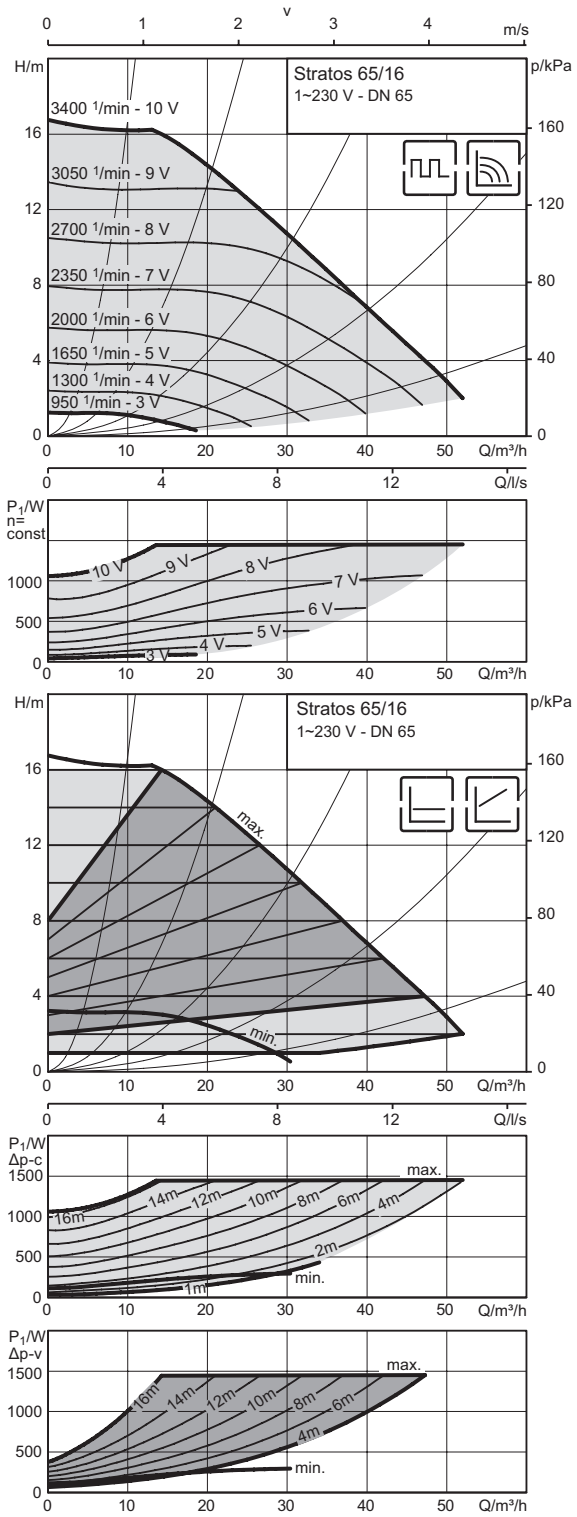

Technical data / Pump curves

Dimension drawing

Stratos 65/16

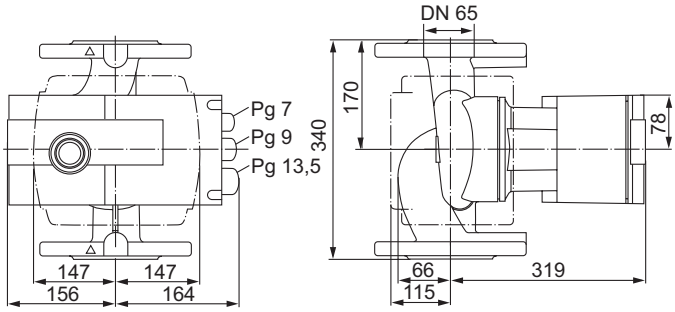

Dimension drawing, flange

PN 6/10

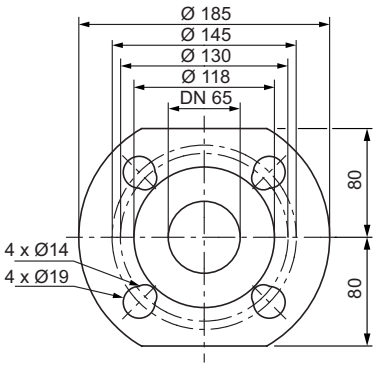

Technical data

Designation	Stratos 65/16
Energy efficiency index (EEI)	≤ 0.20
Nominal flange diameter	DN 65
Rated pressure	PN 6/10
Mains connection	1~230 V, 50/60 Hz
Speed *n*	950 - 3400 1/min
Rated power P_2	1200 W
Power consumption P_1	40 - 1450 W
Current consumption I / Starting current [1]	0.30 - 6.40 A / 16 A
Separate power relay with direct connection via 230 V required (applies to all TTE controller modules and module expansions)	YES
Minimum suction head at 50/ 95/110 °C	7 / 15 / 23 m
Weight approx. *m*	29 kg

Materials	
Pump housing	Grey cast iron (EN-GJL-250)
Impeller	Plastic (PPE - 30 % GF)
Pump shaft	Stainless steel (X30Cr13/X46Cr13)
Bearing	Carbon, metal impregnated

[1] Note starting current

Terminal diagram

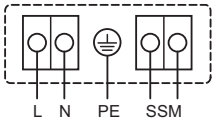

SSM:
Collective fault signal
(NC contact according to VDI 3814, load capacity 1 A, 250 V ~)

Approved fluids (other fluids on request)

Heating water (acc. to Hoval engineering guidelines resp. VDI 2035)

Water-glycol mixtures
(max. 1:1; above 20 % admixture, the pumping data must be checked)

Permitted field of application

Temperature range at max. ambient temperature +40 °C	-10 °C...+110 °C

■ Technical data / Pump curves

Stratos 80/12

Pump curves

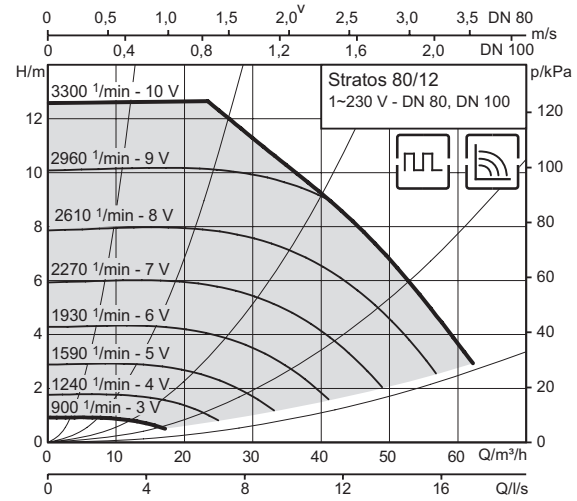

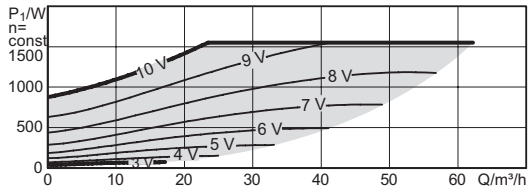

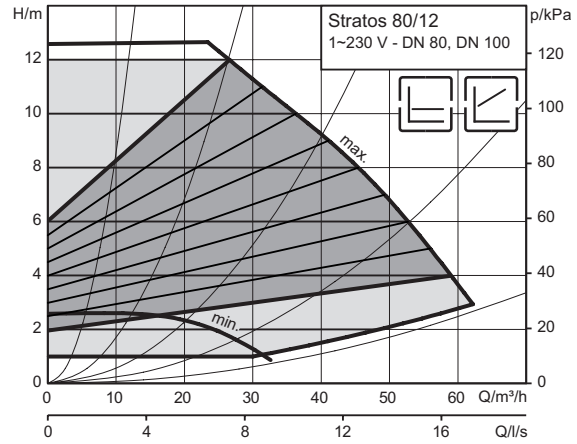

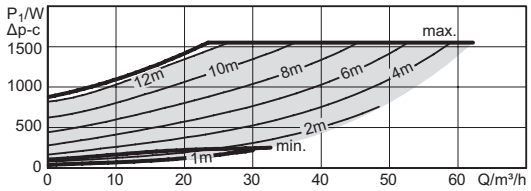

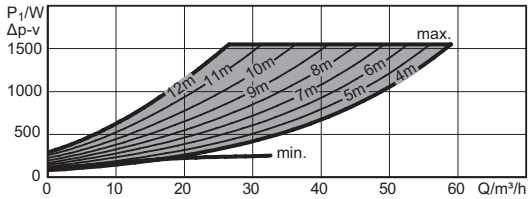

Technical data / Pump curves

Dimension drawing

Stratos 80/12

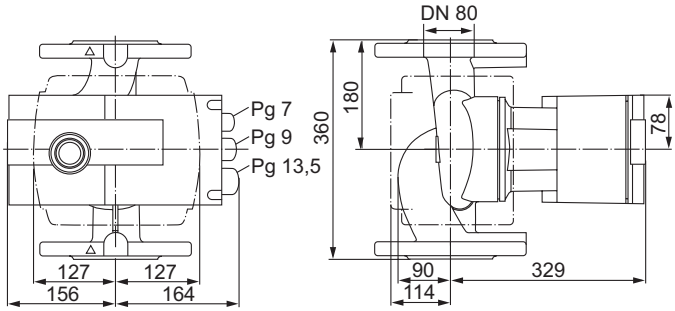

Dimension drawing, flange

PN 6

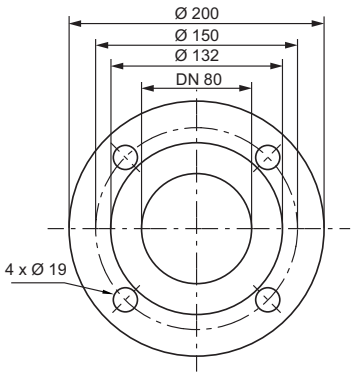

Dimension drawing, flange

PN 10

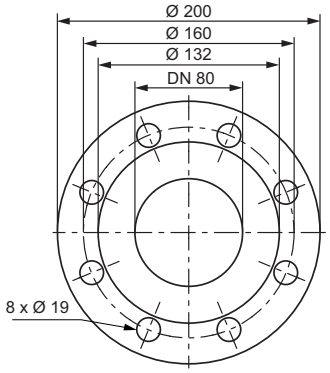

Technical data

Designation	Stratos 80/12	Stratos 80/12
Energy efficiency index (EEI)	≤ 0.20	≤ 0.20
Nominal flange diameter	DN 80	DN 80
Rated pressure	PN 6	PN 10
Mains connection	1~230 V, 50/60 Hz	1~230 V, 50/60 Hz
Speed *n*	900 - 3300 1/min	900 - 3300 1/min
Rated power P_2	1300 W	1300 W
Power consumption P_1	40 - 1550 W	40 - 1550 W
Current consumption I / Starting current [1]	0.30 - 6.80 A / 16 A	0.30 - 6.80 A / 16 A
Separate power relay with direct connection via 230 V required (applies to all TTE controller modules and module expansions)	YES	YES
Minimum suction head at 50/95/110 °C	7 / 15 / 23 m	7 / 15 / 23 m
Weight approx. *m*	31 kg	31 kg

Materials

Pump housing	Grey cast iron (EN-GJL-250)
Impeller	Plastic (PP - 50 % GF)
Pump shaft	Stainless steel (X30Cr13/X46Cr13)
Bearing	Carbon, metal impregnated

[1] Note starting current

Terminal diagram

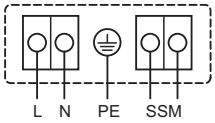

SSM:
Collective fault signal
(NC contact according to VDI 3814, load capacity 1 A, 250 V ~)

Approved fluids (other fluids on request)

Heating water (acc. to Hoval engineering guidelines resp. VDI 2035)

Water-glycol mixtures
(max. 1:1; above 20 % admixture, the pumping data must be checked)

Permitted field of application

Temperature range at max. ambient temperature +40 °C	-10 °C...+110 °C

■ Technical data / Pump curves

Stratos 100/12

Pump curves

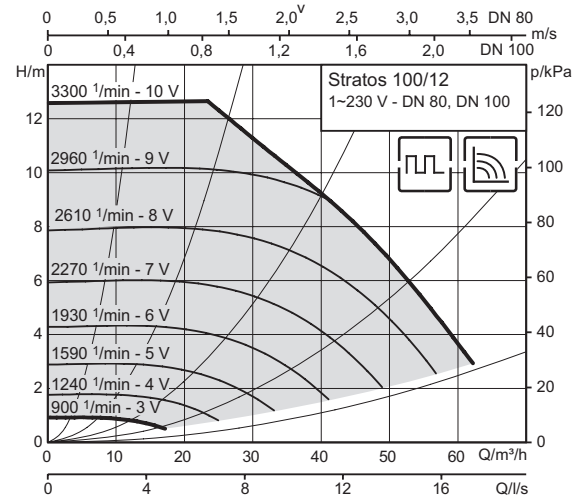

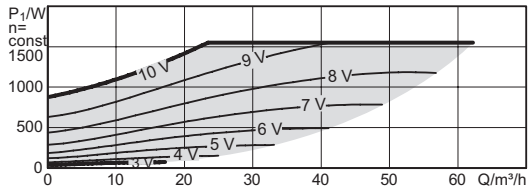

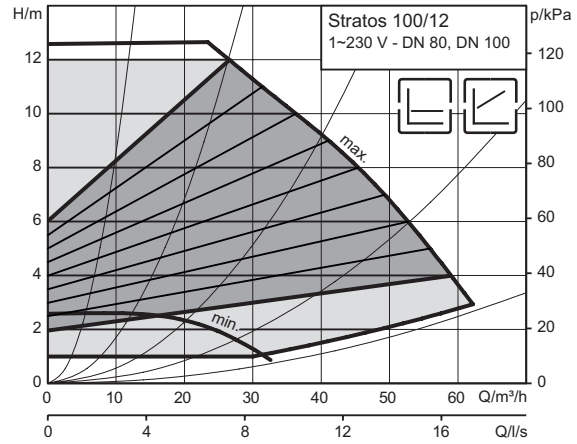

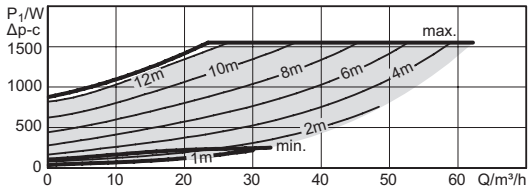

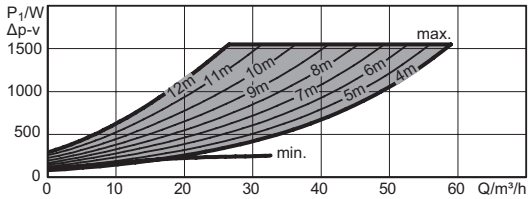

Technical data / Pump curves

Dimension drawing

Stratos 100/12

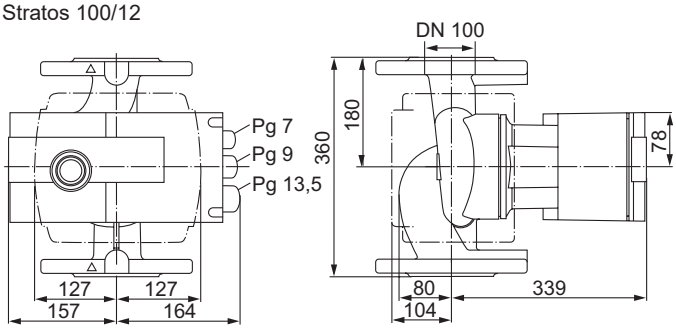

Dimension drawing, flange

PN 6

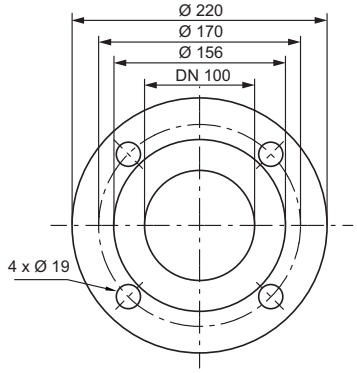

Dimension drawing, flange

PN 10

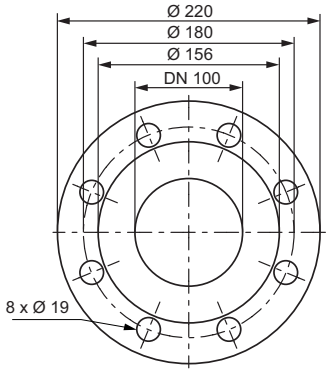

Technical data

Designation	Stratos 100/12	Stratos 100/12
Energy efficiency index (EEI)	≤ 0.20	≤ 0.20
Nominal flange diameter	DN 100	DN 100
Rated pressure	PN 6	PN 10
Mains connection	1~230 V, 50/60 Hz	1~230 V, 50/60 Hz
Speed *n*	900 - 3300 1/min	900 - 3300 1/min
Rated power P_2	1300 W	1300 W
Power consumption P_1	40 - 1550 W	40 - 1550 W
Current consumption I / Starting current [1]	0.30 - 6.80 A / 16 A	0.30 - 6.80 A / 16 A
Separate power relay with direct connection via 230 V required (applies to all TTE controller modules and module expansions)	YES	YES
Minimum suction head at 50/95/110 °C	7 / 15 / 23 m	7 / 15 / 23 m
Weight approx. *m*	34 kg	34 kg

Materials

Pump housing	Grey cast iron (EN-GJL-250)
Impeller	Plastic (PP - 50 % GF)
Pump shaft	Stainless steel (X30Cr13/X46Cr13)
Bearing	Carbon, metal impregnated

[1] Note starting current

Terminal diagram

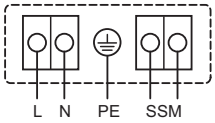

SSM:
Collective fault signal
(NC contact according to VDI 3814, load capacity 1 A, 250 V ~)

Approved fluids (other fluids on request)

Heating water (acc. to Hoval engineering guidelines resp. VDI 2035)

Water-glycol mixtures
(max. 1:1; above 20 % admixture, the pumping data must be checked)

Permitted field of application

Temperature range at max. ambient temperature +40 °C	-10 °C...+110 °C

Description

Stratos-D

- High-efficiency double pump, electronically controlled
- Circulating pump with minimum operating costs, for pipe installation
- Can be used for all HVAC applications
- One-button manual operation level for:
  - Pump on/off
- Selecting the control mode:
  - Δp-c (differential pressure constant)
  - Δp-v (differential pressure variable)
  - Δp-T (differential pressure temperature-controlled) by means of IR-Monitor/ IR-Module/IR-Stick, Modbus, BACnet, LON or Canopen
  - Q-Limit to restrict the maximum volume flow (setting only via IR-Stick)
  - Manual control mode (setting constant speed)
  - Automatic setback operation (self-learning)
  - Setpoint and speed adjustment
- Graphical pump display for each pump, with rotatable display horizontal and vertical module mounting, for display of:
  - Operating state
  - Control mode
  - Differential pressure or rotation speed setpoint
  - Fault and warning signals
- Synchronous motor using ECM technology with very high efficiency and high starting torque, automatic deblocking function
- Fault signal light, potential-free collective fault signal, infrared interface for wireless communication with IR-Monitor/IR-Stick operating and service device.
- 1 plug-in slot for Stratos IF-modules with interfaces for building automation (BA) or dual pump management
- Pump housing made of cast iron with cataphoretic coating, impeller made of glass-fibre reinforced plastic, stainless steel shaft with metal impregnated carbon plain bearings.

Δp-v	Differential pressure variable
	Control signal / interface
Δp-c	Differential pressure constant

Motor
Voltage 1 x 230 V, frequency 50/60 Hz
Protection class IP X4D
Insulation class F
Integrated motor protection

Medium temperature
at max. ambient temperature
+40 °C: -10 °C...+110 °C

Connections
DN 32 - DN 100 with flange connections without counterflanges, screws and joints.
DN 32 - DN 65 incl. washers for flange screws (PN 6/10).

Design on request
Compensation pieces for adapting the installation length with replacement pumps see chapter “Type comparison”

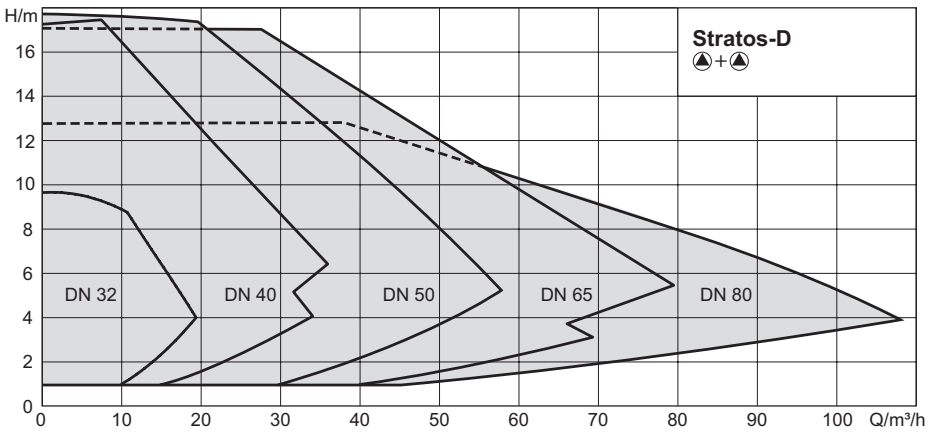

Part No.

Premium double pump Stratos D
with flange connections

Part No.

- High-efficiency premium double pumps, colour green with operating mode switch and LC display
- Slot for IF modules
- Without counterflanges, screws and joints
- Without thermal insulation jacket

Medium temperature -10 °C...+110 °C

Wilo	Hoval					
Stratos-D	Nominal diameter DN	Delivery head mWC	Overall length mm	Rated pressure PN	EEI ≤	
32/1-8	32	8	220	6/10	0.23	2065 445
32/1-12	32	12	220	6/10	0.23	2064 695
40/1-8	40	8	220	6/10	0.23	2064 696
40/1-12	40	12	250	6/10	0.23	2064 697
40/1-16	40	16	250	6/10	0.23	2064 698
50/1-8	50	8	240	6/10	0.23	2064 699
50/1-12	50	12	280	6/10	0.23	2064 700
50/1-16	50	16	340	6/10	0.23	2064 701
65/1-12	65	12	340	6/10	0.23	2064 702
65/1-16	65	16	340	6/10	0.23	2064 703
80/1-12	80	12	360	6	0.23	2064 704
80/1-12	80	12	360	10	0.23	2064 705

Type key Hoval

Example	**Stratos-D 32/12 220**
Stratos-D	High-efficiency pump
32	Nominal diameter / Flange
12	Delivery head (mWC)
220	Overall length (mm)

Type key Wilo

Example	**Stratos-D 32/1-12**
32/	Nominal connection diameter
1-12	Nominal delivery head range (m)

Part No.

Accessories		Part No.

Welded-on flanges
2 welded-on flanges
Version in black incl. screws and joints.
Delivery with pump (separately packed)

DN	PN	
32	6	6041 213
40	6	6041 215
50	6	6041 217
65	6	6041 219
80	6	6041 221
100	6	6041 223
32	10	6041 214
40	10	6041 216
50	10	6041 218
65	10	6041 220
80	10	6041 222
100	10	6041 224

Sealing kit for flanges
Consisting of screws and seals.
Delivery with pump (separately packed).

DN	PN	
32	6	6041 271
40	6	6041 273
50	6	6041 275
65	6	6041 277
80	6	6041 279
100	6	6041 281
32	10/16	6041 272
40	10/16	6041 274
50	10/16	6041 276
65	10/16	6041 278
80	10/16	6041 280
100	10/16	6041 282

IR stick 2064 594
USB stick for wireless data exchange for Wilo pumps with infrared interface, adaptable to Windows laptops with USB interface. The IR stick, in connection with the provided software (CD-ROM), enables you to access and store pump data sets as well as send pre-defined pump settings.

IR monitor 2064 595
Operation and service unit for wireless remote control and remote diagnosis for wilo-pumps with infrared interface. Robust plastic housing with graphic display and 1-button operation.

Part No.

	Part No.
IF modules Retrofittable plug-in modules for extending the pump functions, for digital interfaces or for connection to the building management system	
Interfaces zu TopTronic® E	
Interface Ext. Off / SBM	2064 604
Interface Ext. Off / 0-10 V	2064 601
Interface SBM / 0-10 V	2064 603
Interface Ext. Min / 0-10 V	2064 602
Interfaces for building automation	
Interface Modbus RTU	2064 596
Interface LON	2064 599
Interface CANopen	2064 598
Interface BACnet MS/TP	2064 597
Interface PLR	2064 600
Dual pump management (Modbus, BACnet, CANopen)	
Interface DP	2064 605

System component SB-R3K 16 A (relay) for universal use without casing Improved contact material AgSnO2 Relay with 3 switchover contacts max. 400 V/16 A, control voltage 230 V Consisting of: relay R3K support/snap track (8 cm) incl. fastenings for installation in boiler controller Control voltage 230 V Without housing	6044 844

Technical data / Pump curves

Stratos-D 32/8

Pump curves

Δp-c (constant)

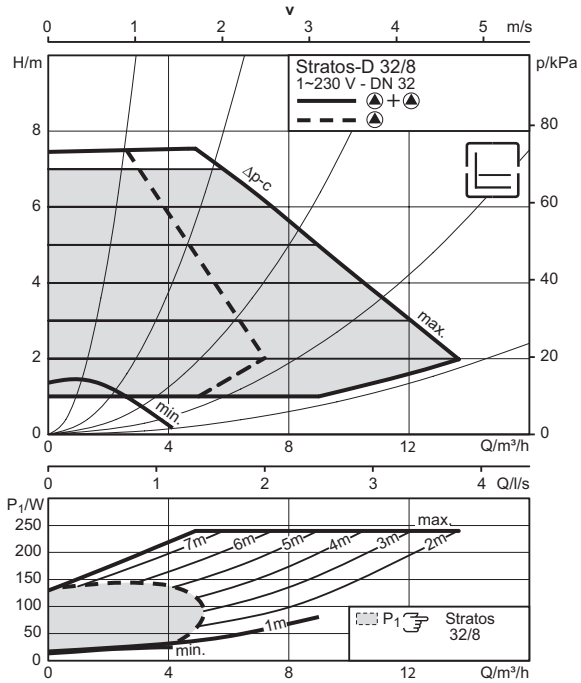

Pump curves

Δp-v (variable)

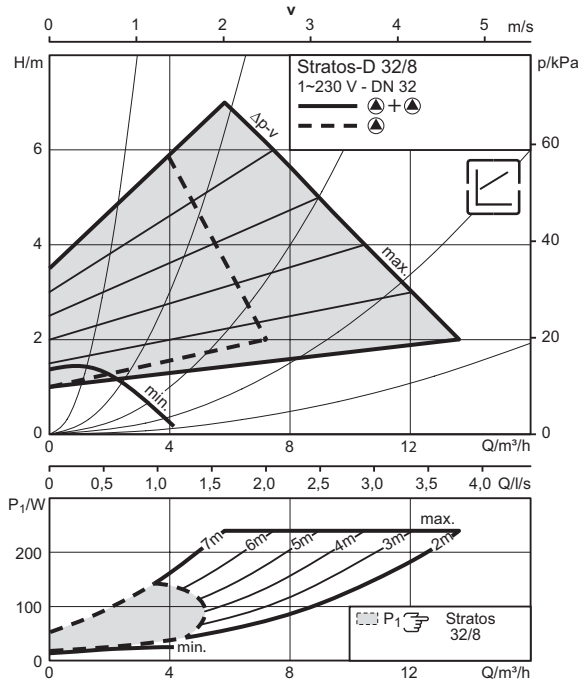

Dimension drawing

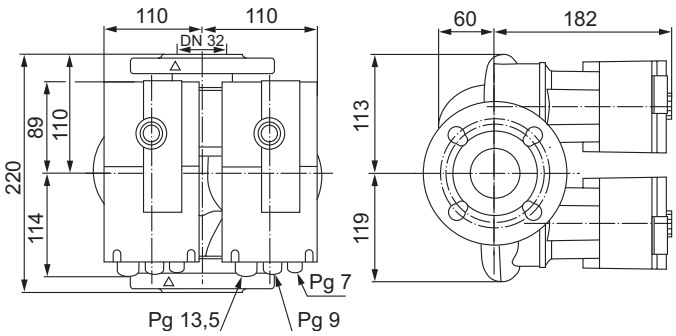

Dimension drawing, flange

PN 6/10

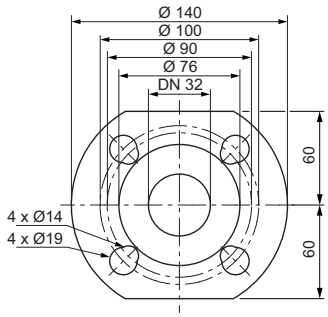

Technical data

Designation	Stratos-D 32/8
Energy efficiency index (EEI)	≤ 0.23
Nominal flange diameter	DN 32
Rated pressure	PN 6/10
Mains connection	1~230 V, 50/60 Hz
Speed *n*	1400 - 3700 1/min
Rated power P_2	100 W
Power consumption P_1	9 - 125 W
Current consumption / Starting current [1]	0.13 - 1.10 A / 2 x 8 A

[1] Note starting current

Technical data

Designation	Stratos-D 32/8
Separate power relay with direct connection via 230 V required (applies to all TTE controller modules and module expansions)	NO
Minimum suction head at 50/95/110 °C	3 / 10 / 16 m
Weight approx. *m*	12 kg
Materials	
Pump housing	Grey cast iron (EN-GJL-250)
Impeller	Plastic (PPE - 30 % GF)
Pump shaft	Stainless steel (X30CR13)
Bearing	Carbon, metal impregnated

Terminal diagram

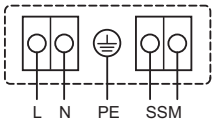

SSM: Collective fault signal
(NC contact according to VDI 3814, load capacity 1 A, 250 V ~)

Approved fluids (other fluids on request)

Heating water (acc. to Hoval engineering guidelines resp. VDI 2035)

Water-glycol mixtures
(max. 1:1; above 20 % admixture, the pumping data must be checked)

Permitted field of application

Temperature range at max. ambient temperature +40 °C	-10 °C...+110 °C

Technical data / Pump curves

Stratos-D 32/12

Pump curves

Δp-c (constant)

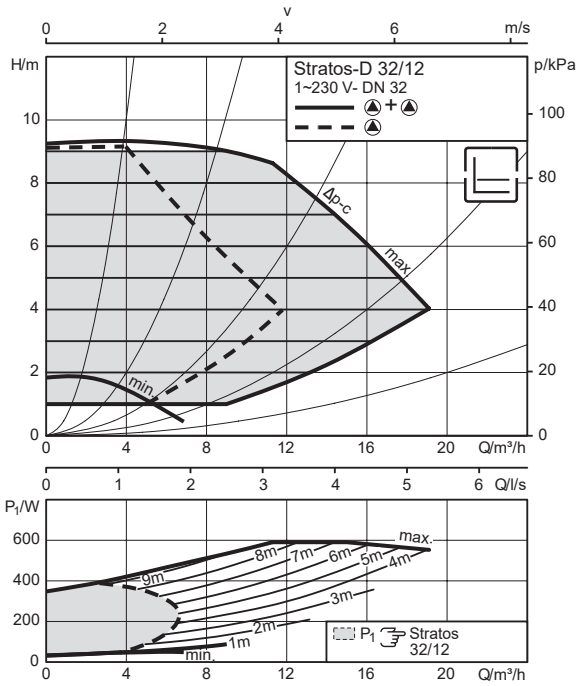

Pump curves

Δp-v (variable)

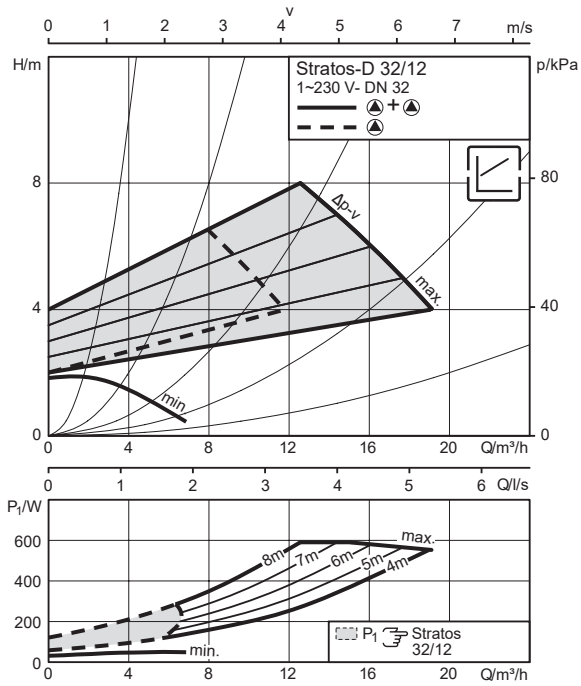

Dimension drawing

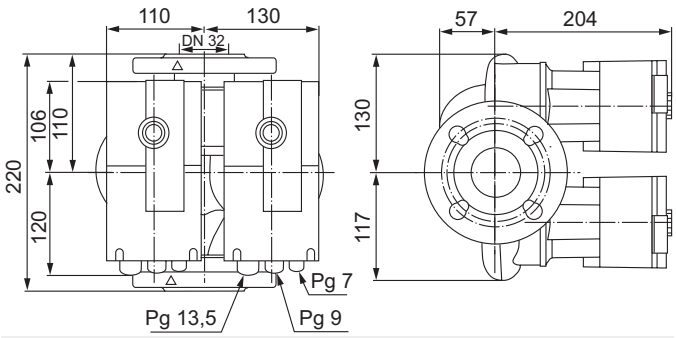

Dimension drawing, flange

PN 6/10

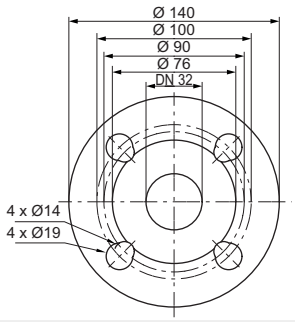

Technical data

Designation	Stratos-D 32/12
Energy efficiency index (EEI)	≤ 0.23
Nominal flange diameter	DN 32
Rated pressure	PN 6/10
Mains connection	1~230 V, 50/60 Hz
Speed *n*	1400 - 4800 1/min
Rated power P_2	200 W
Power consumption P_1	12 - 300 W
Current consumption / Starting current [1]	0.22 - 1.32 A / 2 x 8 A

[1] Note starting current

Technical data

Designation	Stratos-D 32/12
Separate power relay with direct connection via 230 V required (applies to all TTE controller modules and module expansions)	NO
Minimum suction head at 50/95/110 °C	3 / 10 / 16 m
Weight approx. *m*	16.5 kg

Materials

Pump housing	Grey cast iron (EN-GJL-250)
Impeller	Plastic (PPS - 40 % GF)
Pump shaft	Stainless steel (X30CR13)
Bearing	Carbon, metal impregnated

Terminal diagram

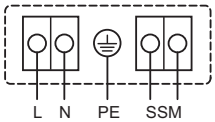

SSM: Collective fault signal
(NC contact according to VDI 3814, load capacity 1 A, 250 V ~)

Approved fluids (other fluids on request)

Heating water (acc. to Hoval engineering guidelines resp. VDI 2035)

Water-glycol mixtures
(max. 1:1; above 20 % admixture, the pumping data must be checked)

Permitted field of application

Temperature range at max. ambient temperature +40 °C	-10 °C...+110 °C

Technical data / Pump curves

Stratos-D 40/8

Pump curves

Δp-c (constant)

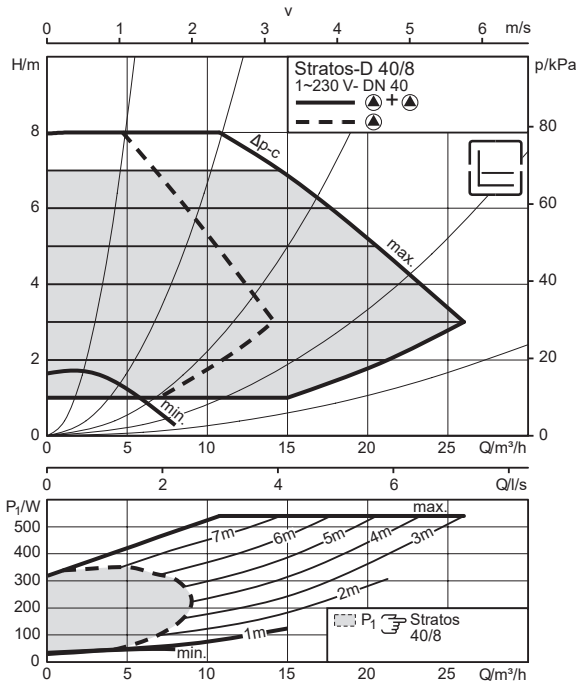

Pump curves

Δp-v (variable)

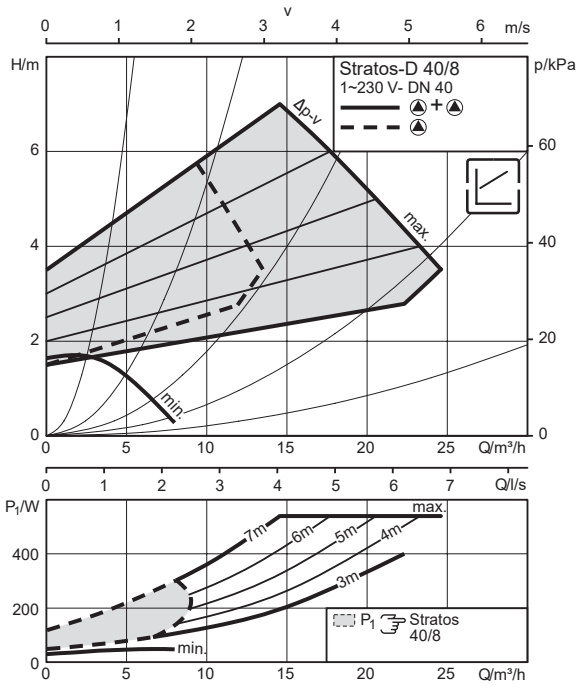

Dimension drawing

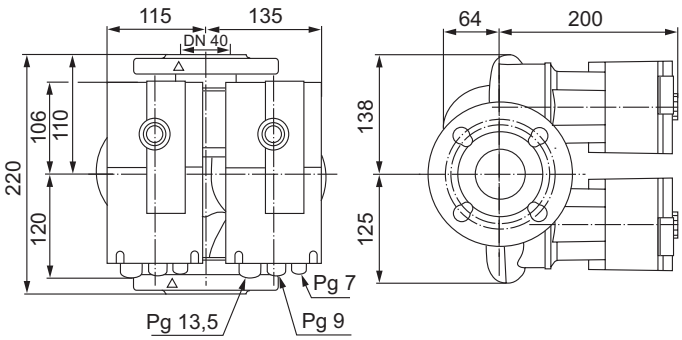

Dimension drawing, flange

PN 6/10

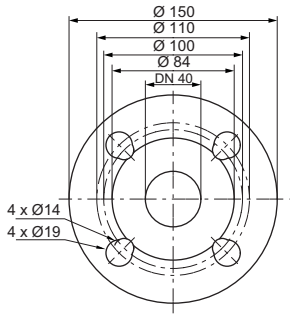

Technical data

Designation	Stratos-D 40/8
Energy efficiency index (EEI)	≤ 0.23
Nominal flange diameter	DN 40
Rated pressure	PN 6/10
Mains connection	1~230 V, 50/60 Hz
Speed *n*	1400 - 4800 1/min
Rated power P_2	200 W
Power consumption P_1	12 - 300 W
Current consumption *I* Starting current [1]	0.22 - 1.32 A / 2 x 8 A

[1] Note starting current

Technical data

Designation	Stratos-D 40/8
Separate power relay with direct connection via 230 V required (applies to all TTE controller modules and module expansions)	NO
Minimum suction head at 50/95/110 °C	3 / 10 / 16 m
Weight approx. *m*	17 kg

Materials

Pump housing	Grey cast iron (EN-GJL-250)
Impeller	Plastic (PPS - 40 % GF)
Pump shaft	Stainless steel (X30CR13)
Bearing	Carbon, metal impregnated

Terminal diagram

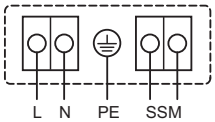

SSM: Collective fault signal
(NC contact according to VDI 3814, load capacity 1 A, 250 V ~)

Approved fluids (other fluids on request)

Heating water (acc. to Hoval engineering guidelines resp. VDI 2035)

Water-glycol mixtures
(max. 1:1; above 20 % admixture, the pumping data must be checked)

Permitted field of application

Temperature range at max. ambient temperature +40 °C	-10 °C...+110 °C

Technical data / Pump curves

Stratos-D 40/12

Pump curves

Δp-c (constant)

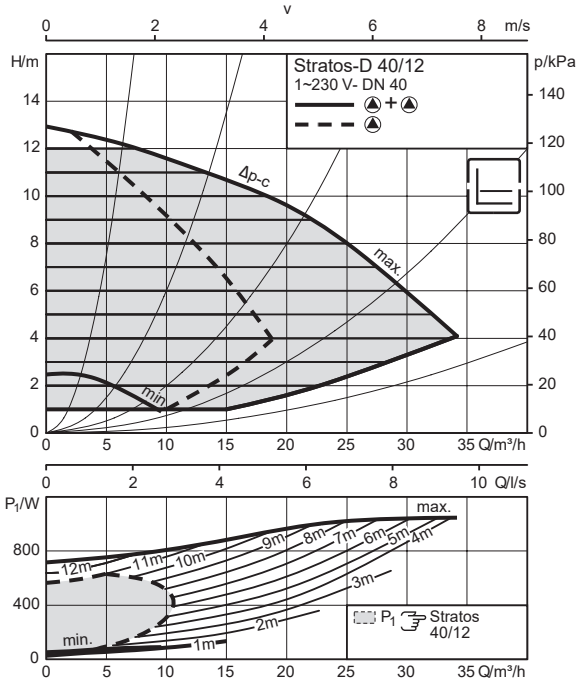

Pump curves

Δp-v (variable)

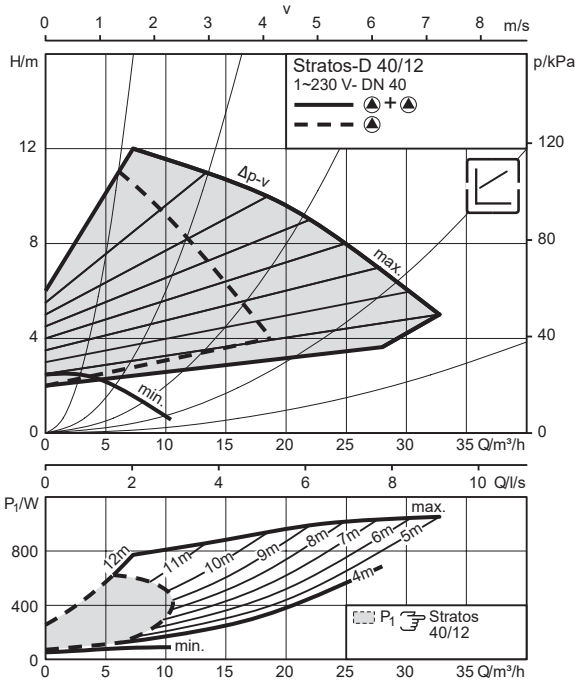

Dimension drawing

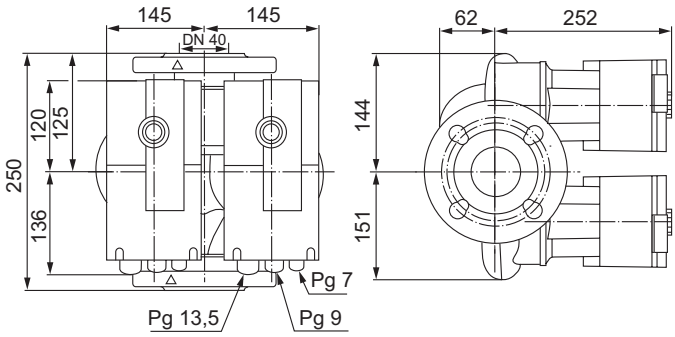

Dimension drawing, flange

PN 6/10

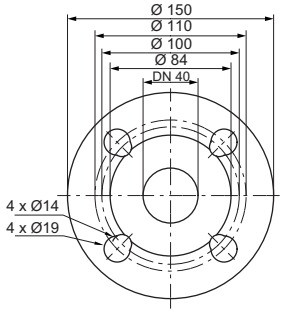

Technical data

Designation	Stratos-D 40/12
Energy efficiency index (EEI)	≤ 0.23
Nominal flange diameter	DN 40
Rated pressure	PN 6/10
Mains connection	1~230 V, 50/60 Hz
Speed *n*	1400 - 4600 1/min
Rated power P_2	450 W
Power consumption P_1	25 - 550 W
Current consumption / Starting current [1]	0.20 - 2.40 A / 2 x 8 A

[1] Note starting current

Technical data

Designation	Stratos-D 40/12
Separate power relay with direct connection via 230 V required (applies to all TTE controller modules and module expansions)	NO
Minimum suction head at 50/95/110 °C	5 / 12 / 18 m
Weight approx. *m*	25 kg
Materials	
Pump housing	Grey cast iron (EN-GJL-250)
Impeller	Plastic (PPS - 40 % GF)
Pump shaft	Stainless steel (X30Cr13/X46Cr13)
Bearing	Carbon, metal impregnated

Terminal diagram

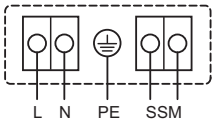

SSM: Collective fault signal
(NC contact according to VDI 3814, load capacity 1 A, 250 V ~)

Approved fluids (other fluids on request)

Heating water (acc. to Hoval engineering guidelines resp. VDI 2035)

Water-glycol mixtures
(max. 1:1; above 20 % admixture, the pumping data must be checked)

Permitted field of application

Temperature range at max. ambient temperature +40 °C	-10 °C...+110 °C

Technical data / Pump curves

Stratos-D 40/16

Pump curves

Δp-c (constant)

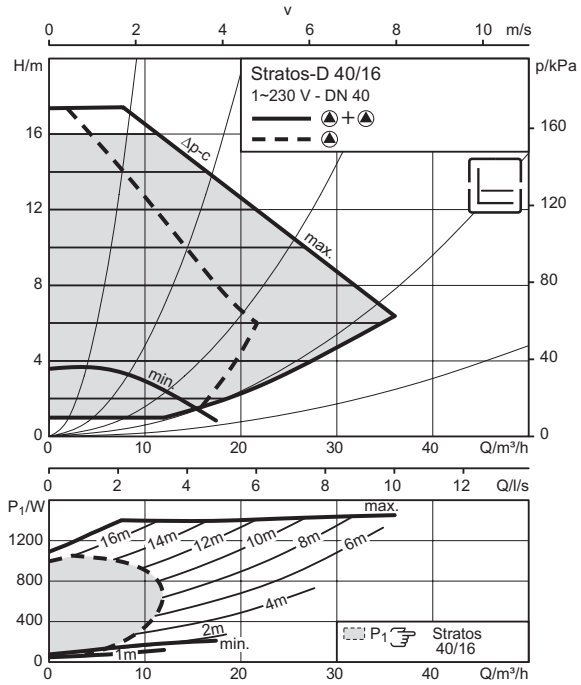

Pump curves

Δp-v (variable)

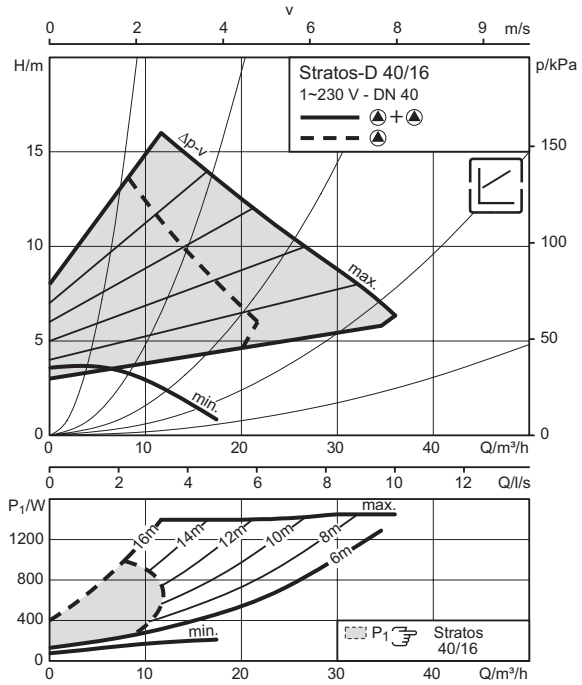

Dimension drawing

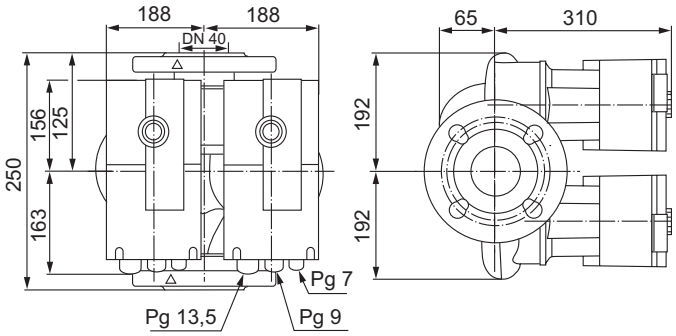

Dimension drawing, flange

PN 6/10

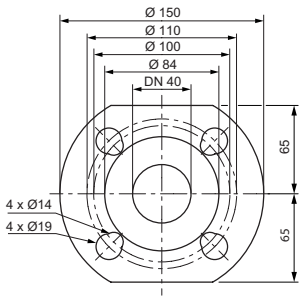

Technical data

Designation	Stratos-D 40/16
Energy efficiency index (EEI)	≤ 0.23
Nominal flange diameter	DN 40
Rated pressure	PN 6/10
Mains connection	1~230 V, 50/60 Hz
Speed *n*	950 - 3500 1/min
Rated power P_2	650 W
Power consumption P_1	35 - 800 W
Current consumption / Starting current [1]	0.30 - 3.50 A / 2x16 A

[1] Note starting current

Technical data

Designation	Stratos-D 40/16
Separate power relay with direct connection via 230 V required (applies to all TTE controller modules and module expansions)	YES
Minimum suction head at 50/95/110 °C	7 / 15 / 23 m
Weight approx. *m*	44 kg
Materials	
Pump housing	Grey cast iron (EN-GJL-250)
Impeller	Plastic (PPE - 30 % GF)
Pump shaft	Stainless steel (X30Cr13/X46Cr13)
Bearing	Carbon, metal impregnated

Terminal diagram

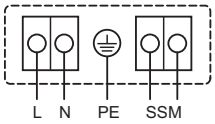

SSM: Collective fault signal
(NC contact according to VDI 3814, load capacity 1 A, 250 V ~)

Approved fluids (other fluids on request)

Heating water (acc. to Hoval engineering guidelines resp. VDI 2035)

Water-glycol mixtures
(max. 1:1; above 20 % admixture, the pumping data must be checked)

Permitted field of application

Temperature range at max. ambient temperature +40 °C	-10 °C...+110 °C

Technical data / Pump curves

Stratos-D 50/8

Pump curves

Δp-c (constant)

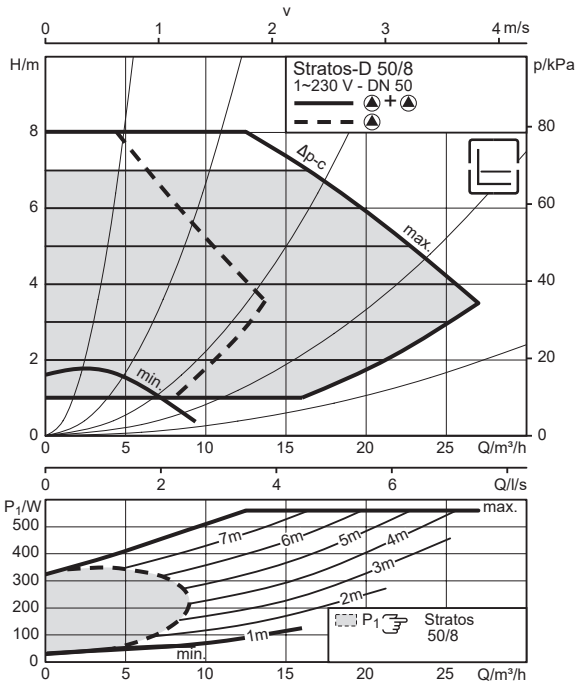

Pump curves

Δp-v (variable)

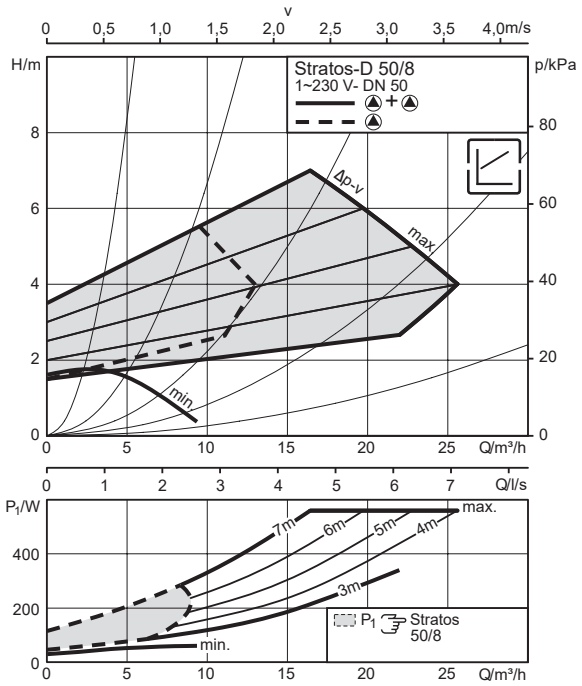

Dimension drawing

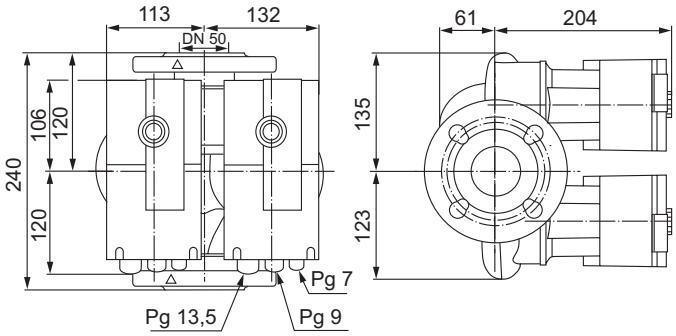

Dimension drawing, flange

PN 6/10

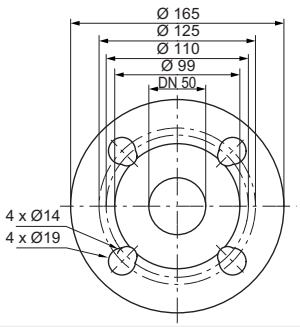

Technical data

Designation	Stratos-D 50/8
Energy efficiency index (EEI)	≤ 0.23
Nominal flange diameter	DN 50
Rated pressure	PN 6/10
Mains connection	1~230 V, 50/60 Hz
Speed *n*	1400 - 4800 1/min
Rated power P_2	200 W
Power consumption P_1	12 - 300 W
Current consumption / Starting current [1]	0.22 - 1.32 A / 2 x 8 A

[1] Note starting current

Technical data

Designation	Stratos-D 50/8
Separate power relay with direct connection via 230 V required (applies to all TTE controller modules and module expansions)	NO
Minimum suction head at 50/95/110 °C	3 / 10 / 16 m
Weight approx. *m*	19 kg

Materials

Pump housing	Grey cast iron (EN-GJL-250)
Impeller	Plastic (PPS - 40 % GF)
Pump shaft	Stainless steel (X30CR13)
Bearing	Carbon, metal impregnated

Terminal diagram

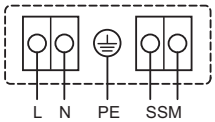

SSM: Collective fault signal
(NC contact according to VDI 3814, load capacity 1 A, 250 V ~)

Approved fluids (other fluids on request)

Heating water (acc. to Hoval engineering guidelines resp. VDI 2035)

Water-glycol mixtures
(max. 1:1; above 20 % admixture, the pumping data must be checked)

Permitted field of application

Temperature range at max. ambient temperature +40 °C	-10 °C...+110 °C

Technical data / Pump curves

Stratos-D 50/12

Pump curves

Δp-c (constant)

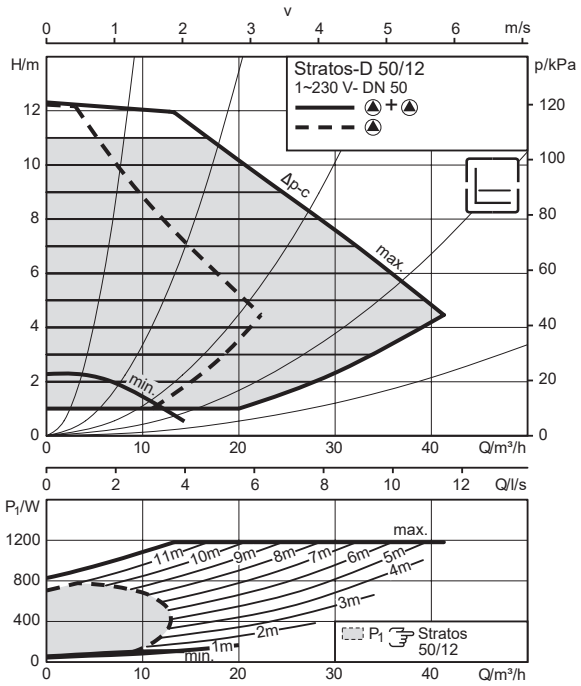

Pump curves

Δp-v (variable)

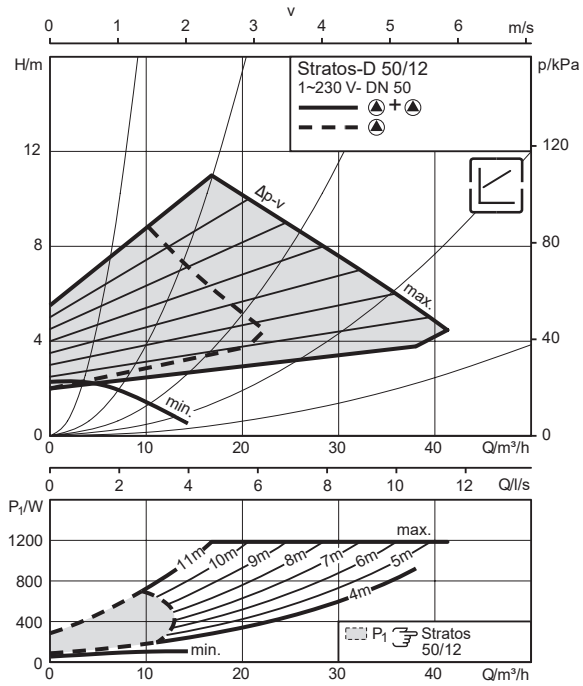

Dimension drawing

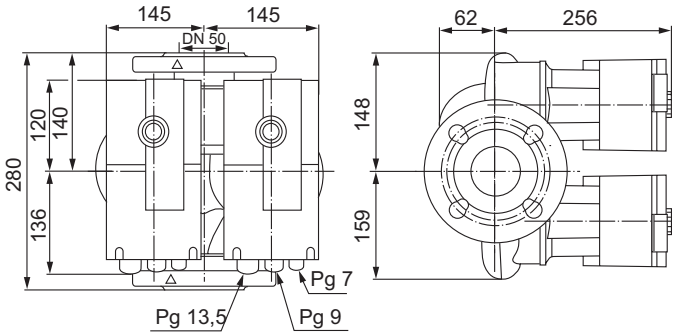

Dimension drawing, flange

PN 6/10

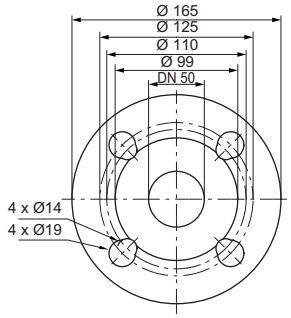

Technical data

Designation	Stratos-D 50/12
Energy efficiency index (EEI)	≤ 0.23
Nominal flange diameter	DN 50
Rated pressure	PN 6/10
Mains connection	1~230 V, 50/60 Hz
Speed *n*	1400 - 4600 1/min
Rated power P_2	500 W
Power consumption P_1	25 - 590 W
Current consumption / Starting current [1]	0.20 - 2.60 A / 2 x 8 A

[1] Note starting current

Technical data

Designation	Stratos-D 50/12
Separate power relay with direct connection via 230 V required (applies to all TTE controller modules and module expansions)	NO
Minimum suction head at 50/95/110 °C	5 / 12 / 18 m
Weight approx. *m*	27 kg
Materials	
Pump housing	Grey cast iron (EN-GJL-250)
Impeller	Plastic (PPS - 40 % GF)
Pump shaft	Stainless steel (X30Cr13/X46Cr13)
Bearing	Carbon, metal impregnated

Terminal diagram

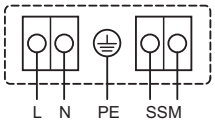

SSM: Collective fault signal
(NC contact according to VDI 3814, load capacity 1 A, 250 V ~)

Approved fluids (other fluids on request)

Heating water (acc. to Hoval engineering guidelines resp. VDI 2035)

Water-glycol mixtures
(max. 1:1; above 20 % admixture, the pumping data must be checked)

Permitted field of application

Temperature range at max. ambient temperature +40 °C	-10 °C...+110 °C

Technical data / Pump curves

Stratos-D 50/16

Pump curves

Δp-c (constant)

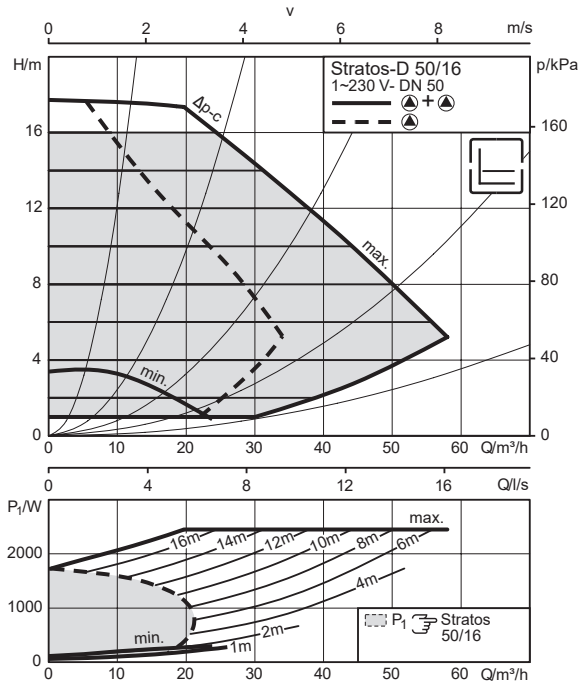

Pump curves

Δp-v (variable)

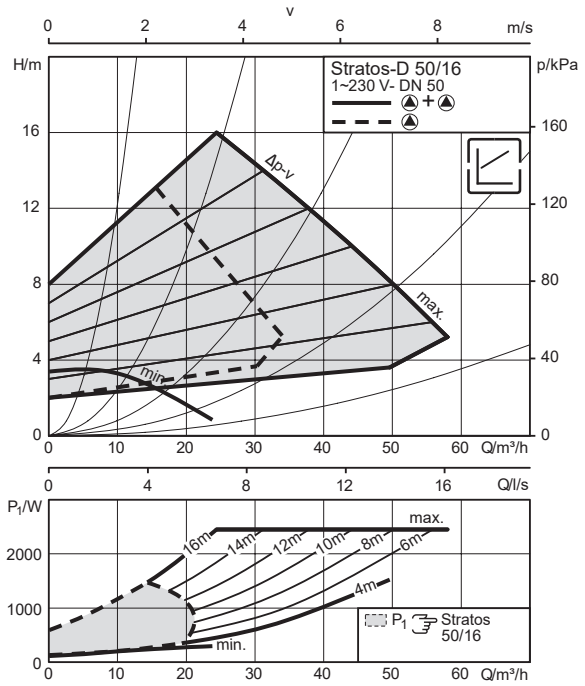

Dimension drawing

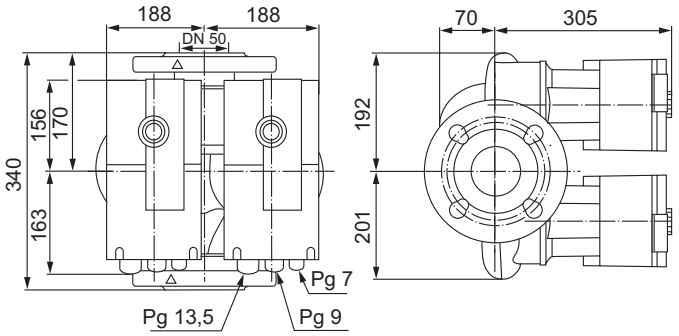

Dimension drawing, flange

PN 6/10

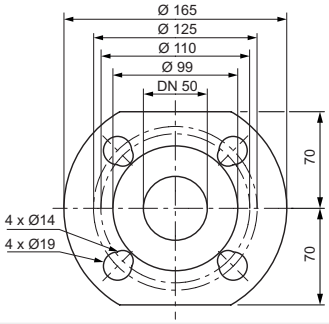

Technical data

Designation	Stratos-D 50/16
Energy efficiency index (EEI)	≤ 0.23
Nominal flange diameter	DN 50
Rated pressure	PN 6/10
Mains connection	1~230 V, 50/60 Hz
Speed *n*	950 - 3400 1/min
Rated power P_2	1050 W
Power consumption P_1	40 - 1250 W
Current consumption / Starting current [1]	0.30 - 5.50 A / 2 x 16 A

[1] Note starting current

Technical data

Designation	Stratos-D 50/16
Separate power relay with direct connection via 230 V required (applies to all TTE controller modules and module expansions)	YES
Minimum suction head at 50/95/110 °C	7 / 15 / 23 m
Weight approx. *m*	48 kg
Materials	
Pump housing	Grey cast iron (EN-GJL-250)
Impeller	Plastic (PPE - 30 % GF)
Pump shaft	Stainless steel (X30Cr13/X46Cr13)
Bearing	Carbon, metal impregnated

Terminal diagram

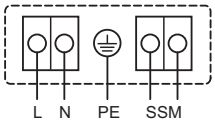

SSM: Collective fault signal
(NC contact according to VDI 3814, load capacity 1 A, 250 V ~)

Approved fluids (other fluids on request)

Heating water (acc. to Hoval engineering guidelines resp. VDI 2035)

Water-glycol mixtures
(max. 1:1; above 20 % admixture, the pumping data must be checked)

Permitted field of application

Temperature range at max. ambient temperature +40 °C	-10 °C...+110 °C

Technical data / Pump curves

Stratos-D 65/12

Pump curves

Δp-c (constant)

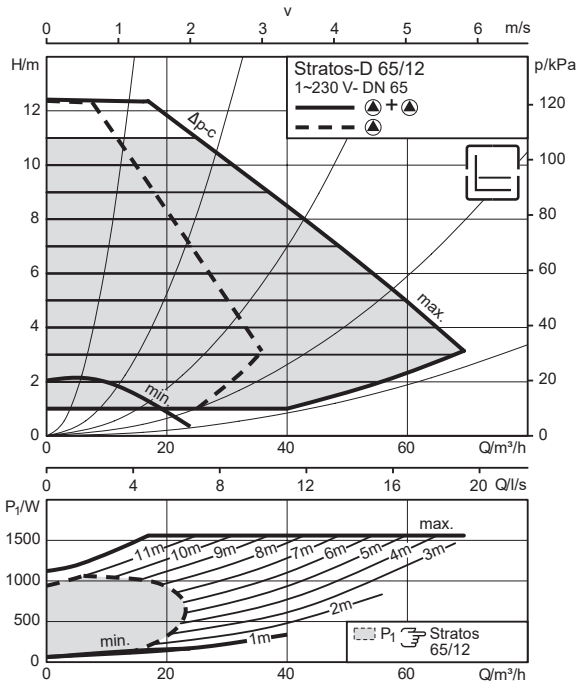

Pump curves

Δp-v (variable)

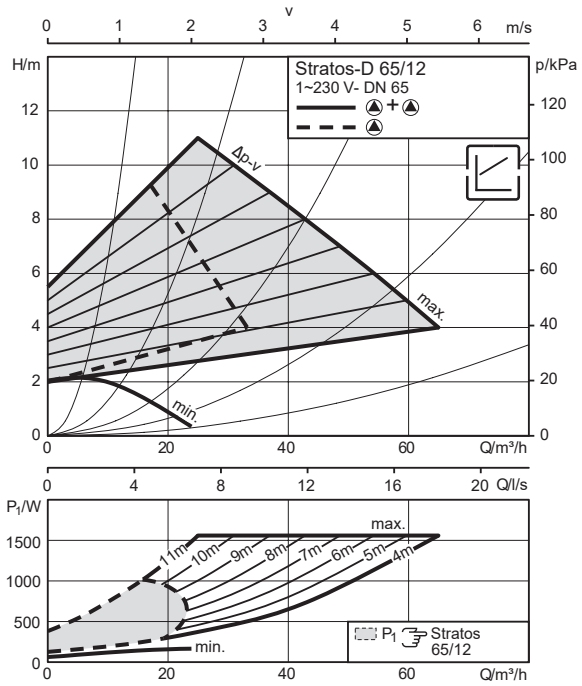

Dimension drawing

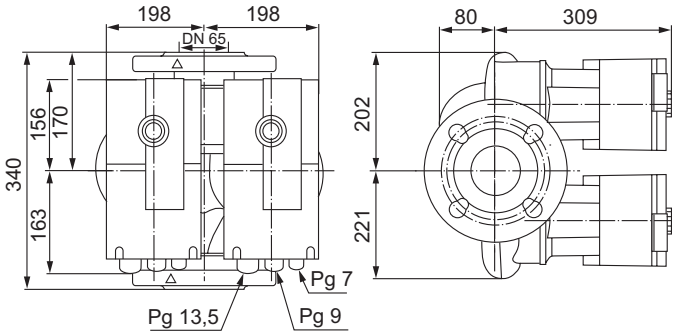

Dimension drawing, flange

PN 6/10

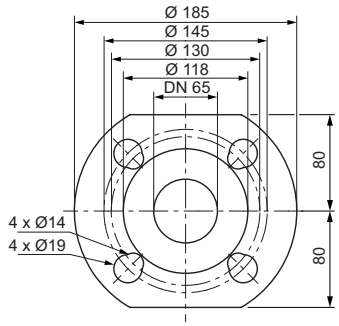

Technical data

Designation	Stratos-D 65/12
Energy efficiency index (EEI)	≤ 0.23
Nominal flange diameter	DN 65
Rated pressure	PN 6/10
Mains connection	1~230 V, 50/60 Hz
Speed *n*	950 - 2800 1/min
Rated power P_2	650 W
Power consumption P_1	38 - 800 W
Current consumption / Starting current [1]	0.30 - 3.50 A / 2 x 16 A

[1] Note starting current

Technical data

Designation	Stratos-D 65/12
Separate power relay with direct connection via 230 V required (applies to all TTE controller modules and module expansions)	YES
Minimum suction head at 50/95/110 °C	7 / 15 / 23 m
Weight approx. *m*	49.4 kg

Materials

Pump housing	Grey cast iron (EN-GJL-250)
Impeller	Plastic (PPE - 30 % GF)
Pump shaft	Stainless steel (X30Cr13/X46Cr13)
Bearing	Carbon, metal impregnated

Terminal diagram

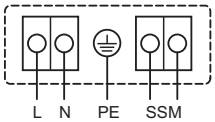

SSM: Collective fault signal
(NC contact according to VDI 3814, load capacity 1 A, 250 V ~)

Approved fluids (other fluids on request)

Heating water (acc. to Hoval engineering guidelines resp. VDI 2035)

Water-glycol mixtures
(max. 1:1; above 20 % admixture, the pumping data must be checked)

Permitted field of application

Temperature range at max. ambient temperature +40 °C	-10 °C...+110 °C

Technical data / Pump curves

Stratos-D 65/16

Pump curves

Δp-c (constant)

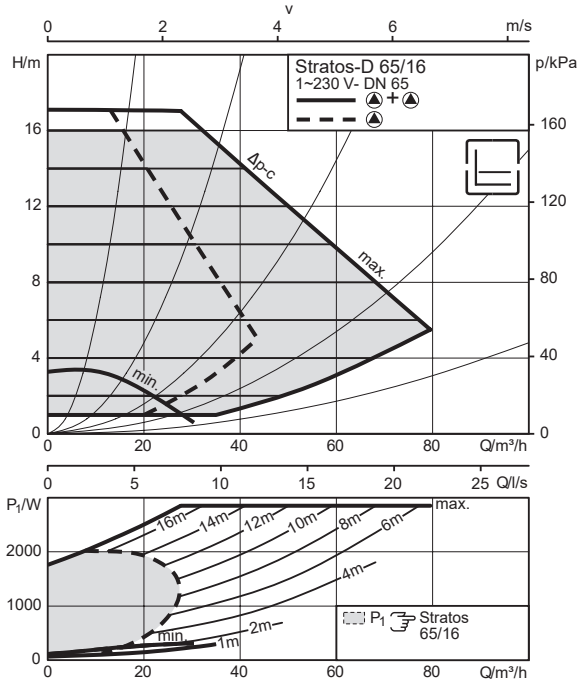

Pump curves

Δp-v (variable)

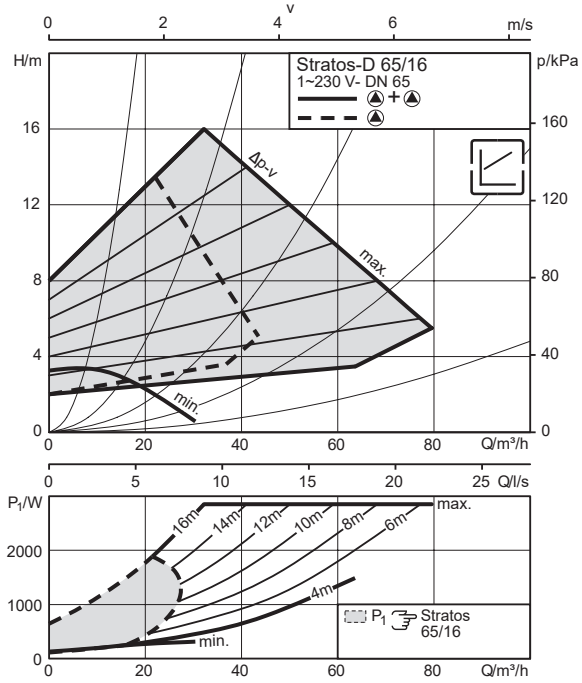

Dimension drawing

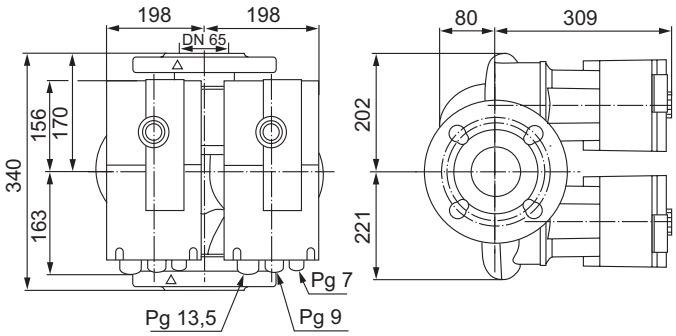

Dimension drawing, flange

PN 6/10

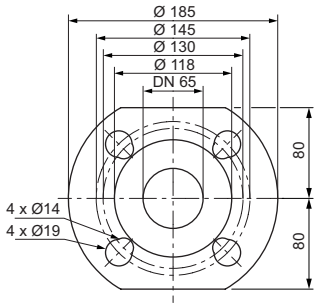

Technical data

Designation	Stratos-D 65/16
Energy efficiency index (EEI)	≤ 0.23
Nominal flange diameter	DN 65
Rated pressure	PN 6/10
Mains connection	1~230 V, 50/60 Hz
Speed *n*	950 - 3400 1/min
Rated power P_2	1200 W
Power consumption P_1	40 - 1450 W
Current consumption / Starting current [1]	0.30 - 6.40 A / 2 x 16 A

[1] Note starting current

Technical data

Designation	Stratos-D 65/16
Separate power relay with direct connection via 230 V required (applies to all TTE controller modules and module expansions)	YES
Minimum suction head at 50/95/110 °C	7 / 15 / 23 m
Weight approx. *m*	51 kg

Materials	
Pump housing	Grey cast iron (EN-GJL-250)
Impeller	Plastic (PPE - 30 % GF)
Pump shaft	Stainless steel (X30Cr13/X46Cr13)
Bearing	Carbon, metal impregnated

Terminal diagram

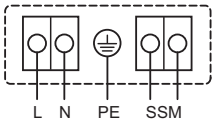

SSM: Collective fault signal
(NC contact according to VDI 3814, load capacity 1 A, 250 V ~)

Approved fluids (other fluids on request)

Heating water (acc. to Hoval engineering guidelines resp. VDI 2035)

Water-glycol mixtures
(max. 1:1; above 20 % admixture, the pumping data must be checked)

Permitted field of application

Temperature range at max. ambient temperature +40 °C	-10 °C...+110 °C

Technical data / Pump curves

Stratos-D 80/12

Pump curves

Δp-c (constant)

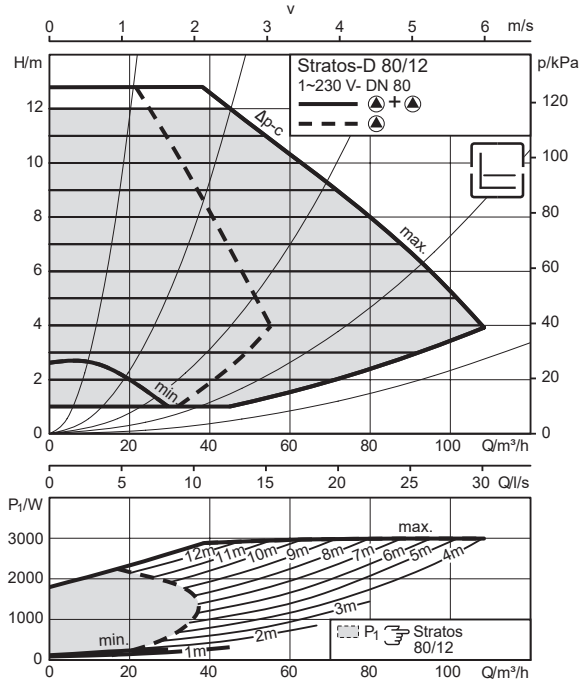

Pump curves

Δp-v (variable)

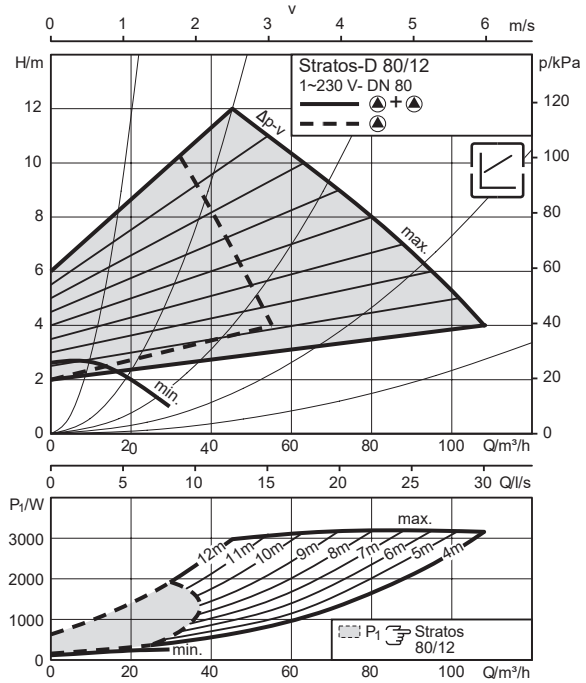

Dimension drawing

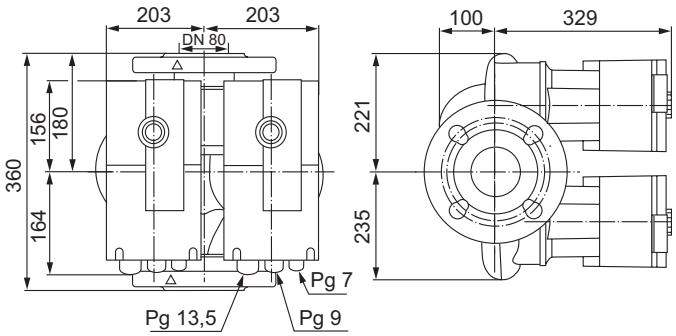

Dimension drawing, flange

PN 6

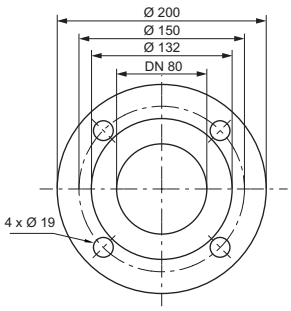

Dimension drawing, flange

PN 10

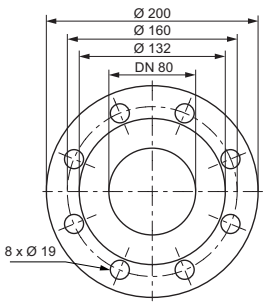

Technical data

Designation	Stratos-D 80/12	Stratos-D 80/12
Energy efficiency index (EEI)	≤ 0.23	≤ 0.23
Nominal flange diameter	DN 80	DN 80
Rated pressure	PN 6	PN 10
Mains connection	1~230 V, 50/60 Hz	1~230 V, 50/60 Hz
Speed *n*	900 - 3300 1/min	900 - 3300 1/min
Rated power P_2	1300 W	1300 W
Power consumption P_1	40 - 1550 W	40 - 1550 W
Current consumption/Starting current [1]	0.30 - 6.80 A / 2 x 16 A	

[1] Note starting current

Technical data

Designation	Stratos-D 80/12	Stratos-D 80/12
Separate power relay with direct connection via 230 V required (applies to all TTE controller modules and module expansions)	YES	YES
Minimum suction head at 50/95/110°C	7 / 15 / 23 m	7 / 15 / 23 m
Weight approx. *m*	61 kg	61 kg

Materials

Pump housing	Grey cast iron (EN-GJL-250)
Impeller	Plastic (PP - 50 % GF)
Pump shaft	Stainless steel (X30Cr13/X46Cr13)
Bearing	Carbon, metal impregnated

Terminal diagram

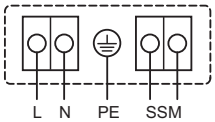

SSM: Collective fault signal
(NC contact according to VDI 3814, load capacity 1 A, 250 V ~)

Approved fluids (other fluids on request)

Heating water (acc. to Hoval engineering guidelines resp. VDI 2035)

Water-glycol mixtures
(max. 1:1; above 20 % admixture, the pumping data must be checked)

Permitted field of application

Temperature range at max. ambient temperature +40 °C	-10 °C...+110 °C

Description

Hoval system pump set SPS-Z

- High-efficiency pump PARA-Z electronically controlled
- Maintenance-free glandless circulating pump with screwed connection, blocking-current proof synchronous motor using ECM technology and built-in electronic power control for variable differential pressure control
- Suitable for all domestic hot water circulation systems in industry and building technology (see Technical data)
- Preselectable control modes for optimum load adjustment:
  - 3-stage constant speed
  - Δp-v (differential pressure variable)
  - Δp-c (differential pressure constant)
- LED ring for display of the active operating state
- Minimal consumption only 3 W, in standby less than 1 W
- Display of fault messages
- Automatic deblocking function
- High starting torque
- Electrical connection without tools by Molex connection system
- Pump body made of brass (resistant to dezincification), impeller made of polypropylene, stainless steel shaft with metal-impregnated carbon friction
- Thermal insulation jacket made of EPP

Δp-v	Differential pressure variable
Δp-c	Differential pressure constant
	Constant speed

Motor
Voltage 1 x 230 V, frequency 50/60 Hz
Protection class IP X4D
Insulation class F
Integrated motor protection

Medium temperature
at max. ambient temperature
+40 °C: 0 °C...+70 °C

Max. permitted total hardness in domestic hot water circulation systems 35.7° fH (20° dH).

Connections
DN 15 - DN 30
With external thread including seals and fittings

Design on request
Compensation pieces for adapting the installation length with replacement pumps see chapter “Type comparison”

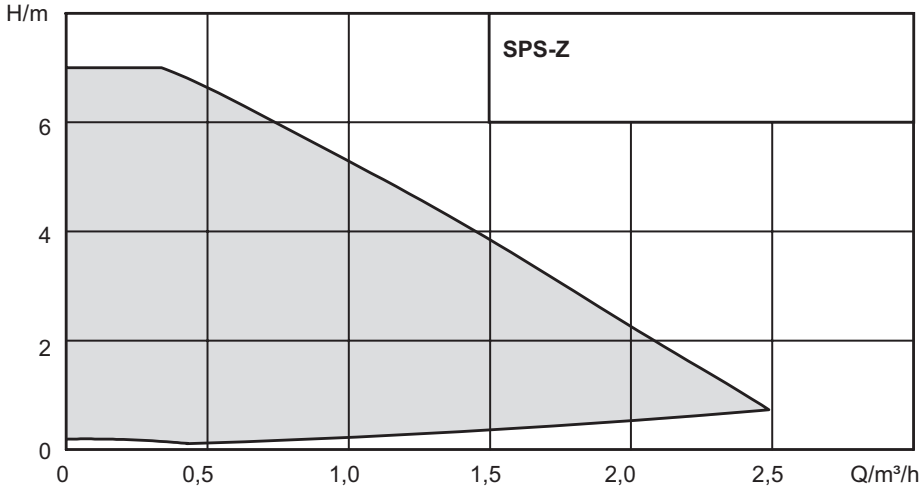

■ Part No.

Hoval system pump set SPS-Z
with external thread including fittings

Part No.

- High-efficiency pump PARA-Z with operating mode switch and LED
- Pump body made of brass DZR
- Electric set, cable 2.0 m and plug
- Including seals and screw fittings or pump adapter set (brass)
- Thermal insulation jacket

Medium temperature 0 °C...+70 °C
Max. permitted total hardness 35.7° fH/ 20° dH

Type	Nominal diameter DN	Delivery head mWC	Overall length mm	Electrical connection	Connection G	Rated pressure PN	Part No.
SPS-Z [1]	15	7	130	SMO	1″	10	6049 473
SPS-Z [2]	20	7	150	SMO	1¼″	10	6049 474
SPS-Z [2]	25	7	150	SMO	1½″	10	6049 475
SPS-Z [2]	25	7	180	SMO	1½″	10	6049 476
SPS-Z [2]	30	7	180	SMO	2″	10	6049 477

[1] Screw fittings
[2] Pump adapter set (without screw fittings)

Type key

Example	**SPS-Z 15/7.0 130 SMO**
SPS-Z	High-efficiency pump
15	Nominal diameter
7	Delivery head (mWC)
130	Overall length (mm)
SMO	Molex connection system

Part No.

Accessories			Part No.

Connection set
Connection set for pumps
consisting of 2 ball valves brass
incl. seals

Type	Pump connection	Screw connection	
AS20-KH	G 1″	R 1″	6032 100
AS25-KH	G 1½″	Rp 1″	6041 180
AS32-KH	G 2″	Rp 1¼″	6041 912

Screw fittings brass
2 fittings
Version brass incl. seals

Type	G	Rp	
VSM11	1″	¾″	6024 287
VSM12	1¼″	¾″	6040 852
VSM21	1½″	1″	6007 004
VSM31	2″	1¼″	6022 618
VSM32	2″	1″	6042 941
VSM33	2″	1½″	6042 942

Special screw fittings brass
2 fittings
Brass version with external thread and internal hole for soldered connection including seals.

Type	G	R	øi	
VLM11	1″	½″	15	6040 863
VLM21	1½″	1″	28	6040 864
VLM31	2″	1¼″	35	6040 865

Technical data / Pump curves

SPS-Z 15/7, 20/7, 25/7, 30/7

Pump curves

Δp-v (variable)

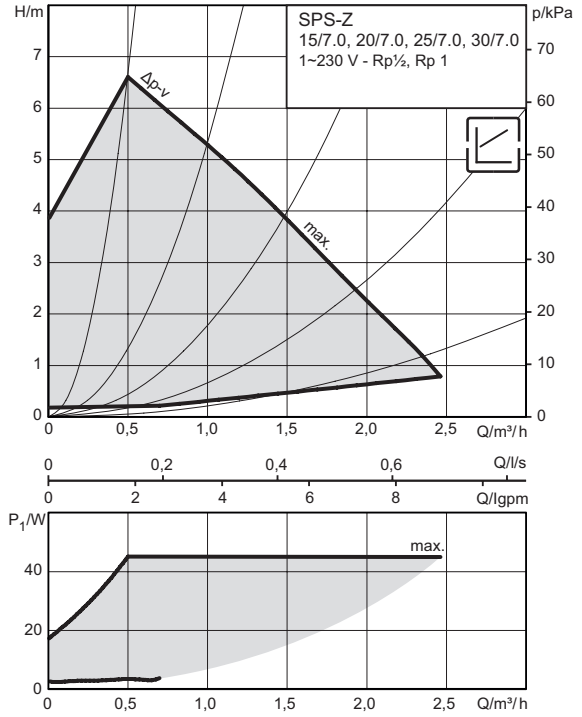

Pump curves

Constant speed

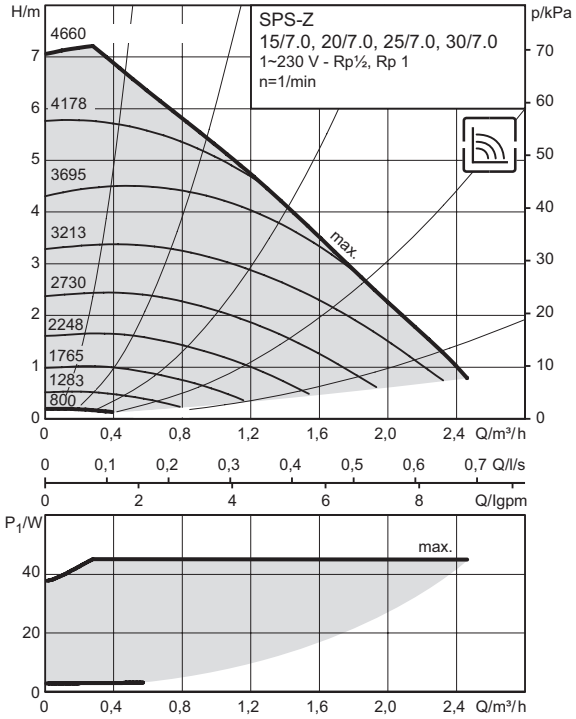

Dimension drawing

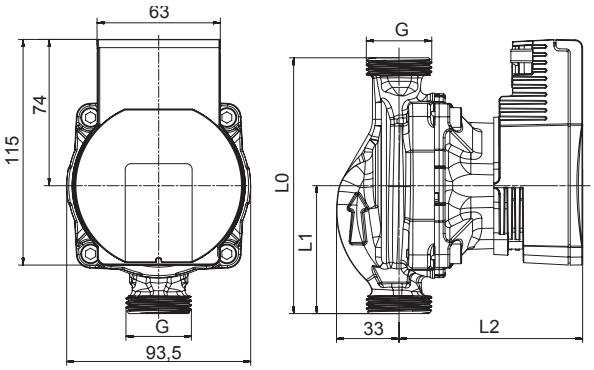

Type	Threaded pipe union	Thread	Overall length			Weight approx.
		G	*L0* mm	*L1* mm	*L2* mm	*m* kg
15/7-130	Rp ½	G 1	130	65	94	1.6
20/7-150	Rp ¾	G 1¼	150	75	94	1.7
25/7-150	Rp 1	G 1½	150	75	94	1.8
25/7-180	Rp 1	G 1½	180	90	94	1.9
30/7-180	Rp 1¼	G 2	180	90	94	2.0

Terminal diagram (Note: pump pre-wired)

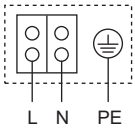

Blocking current-proof motor
Single-phase motor (EM) 2-pole - 1~230 V, 50 Hz

Technical data	
Rated pressure	PN 10
Mains connection	1~230 V, 50/60 Hz
Speed *n*	800 - 4660 1/min
Power consumption P_1	3 - 45 W
Current consumption *I* Starting current	0.03 - 0.44 A / < 3 A
Separate power relay with direct connection via 230 V required (applies to all TTE controller modules and module expansions)	NO
Minimum suction head at 50/95 °C	0.5 / 4.5 m

Materials	
Pump housing	Brass (DZR) (CW625N, resistant to dezincification)
Impeller	Plastic (PP - 40 % GF)
Pump shaft	Stainless steel
Bearing	Carbon, synthetic resin impregnated

Approved fluids (other fluids on request)

Domestic water and water for foodstuffs companies according to regulation by the EDI on domestic, source and mineral water or drinking water regulations such as TrinkwV 2001

Permitted field of application	
Temperature range at max. ambient temperature +40 °C	0 °C...+70 °C
Max. permitted total hardness	35.7° fH/ 20° dH

Description

Stratos PICO-Z

- High-efficiency pump electronically controlled
- Maintenance-free domestic hot water pump with threaded connection, blocking-current proof synchronous motor according to ECM technology and built-in electronic power control for variable differential pressure control
- With maximum efficiencies and high starting torque, including automatic deblocking function
- Preselectable control modes for optimum load adjustment
- Manual operating mode Δp-c (differential pressure constant)
- Temperature-controlled operating mode
- Identification of the thermal disinfection of the domestic hot water tank
- Operating and fault display (with error codes)
  - Display of the current consumption in watts and the cumulative kilowatt hours, or
  - Display of effective flow and temperature
- Reset function for resetting the electricity meter or for resetting the settings to the factory settings
- “Hold” function (key lock) for disabling the settings
- Minimal consumption only 3 W
- Thermal insulation jacket made of EPP

Motor
Voltage 1 x 230 V, frequency 50/60 Hz
Protection class IP X4D
Insulation class F
Integrated motor protection

Medium temperature
at max. ambient temperature
+40 °C: +2 °C...+70 °C
in short-time duty 4 h: +75 °C

Max. permitted total hardness in domestic hot water circulation systems 35.7° fH (20° dH).

Connections
DN 25
With external thread including seals
(without fittings)

Design on request
Compensation pieces for adapting the installation length with replacement pumps see chapter “Type comparison”

Δp-c	Differential pressure constant

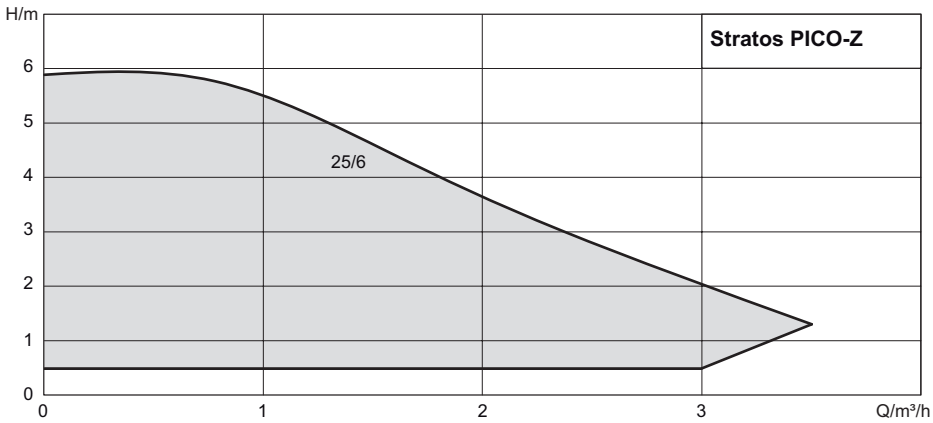

Part No.

High-efficiency pump Stratos PICO-Z
with external thread without fittings

Part No.

- High-efficiency pump with operating mode switch and LCD
- Pump housing made of stainless steel
- With external thread without fittings
- Thermal insulation jacket

Medium temperature +2 °C...+70 °C
Max. permitted total hardness 35.7° fH/ 20° dH

Wilo	Hoval					
Stratos PICO-Z	Nominal diameter DN	Delivery head mWC	Overall length mm	Connection G	Rated pressure PN	
25/1-6	25	6	180	1½″	10	2064 709

Type key Hoval

Example	**Stratos PICO-Z 25/6 180 CR**
Stratos PICO-Z	High-efficiency pump
25	Nominal diameter
6	Delivery head (mWC)
180	Overall length (mm)
CR	Stainless steel

Type key Wilo

Example	**Stratos PICO-Z 25/1-6**
25/	Nominal connection diameter
1-6	Nominal delivery head range (m)

Accessories

Screw fittings brass VSM21 — 6007 004
Version brass incl. seals
2 x screw fittings
External thread: G 1½″
Internal thread: Rp 1″

Special screw fittings brass VLM21 — 6040 864
Version brass with external thread
and internal hole for solder connection
incl. seals.
2 x screw fittings
External screw fittings: G 1½″ and R 1″
Internal diameter: 28 mm

Connection set AS25-KH — 6041 180
Connection set for pumps DN 25 - G 1 ½″
consisting of 2 ball valves brass
incl. seals

Technical data / Pump curves

Stratos PICO-Z 25/6

Pump curves

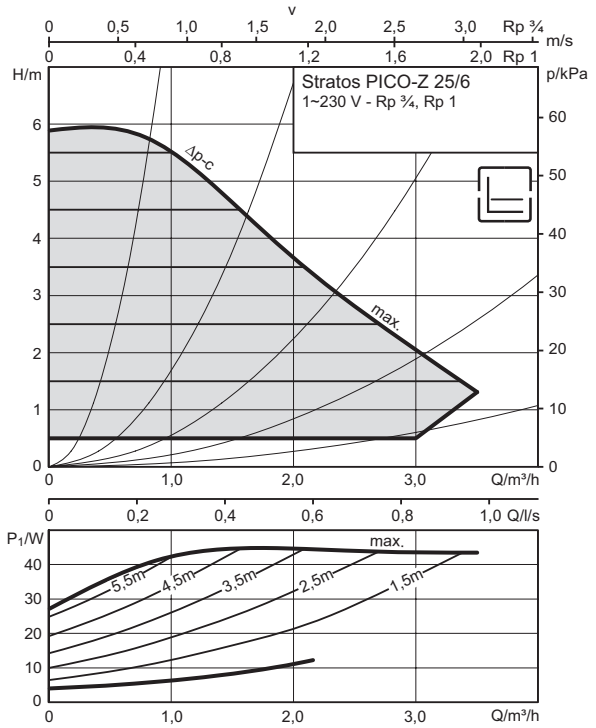

Pump curves

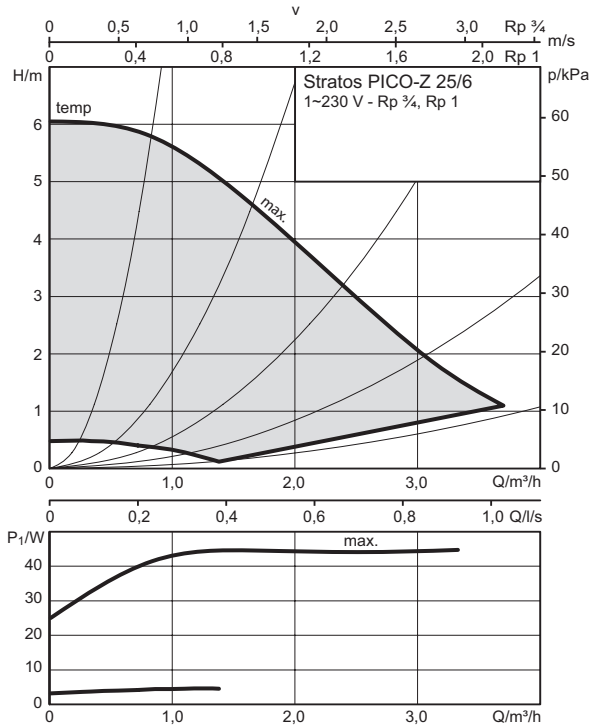

Dimension drawing

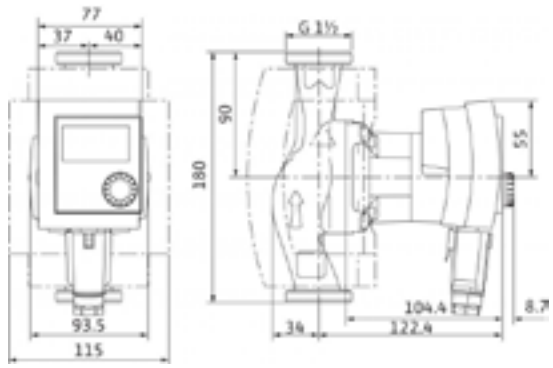

Type	Threaded pipe union	Thread	Overall length	Weight approx.
		G	*L0* mm	*m* kg
25/6	R 1	G 1½	180	1.9

Terminal diagram

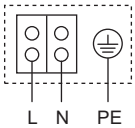

Blocking current-proof motor
Single-phase motor (EM) 2-pole - 1~230 V, 50 Hz

Technical data

Rated pressure	PN 10
Mains connection	1~230 V, 50/60 Hz
Speed *n*	1200 - 4200 1/min
Power consumption P_1	3 - 45 W
Current consumption *I* Starting current	max. 0.49 A / < 5 A
Separate power relay with direct connection via 230 V required (applies to all TTE controller modules and module expansions)	NO
Minimum suction head at 50/95/110 °C	0.5 / 3 / 10 m

Materials

Pump housing	Stainless steel
Impeller	Plastic (PPE/PS - 30 % GF)
Pump shaft	Stainless steel
Bearing	Carbon, synthetic resin impregnated

Approved fluids (other fluids on request)

Domestic water and water for foodstuffs companies according to regulation by the EDI on domestic, source and mineral water or drinking water regulations such as TrinkwV 2001

Permitted field of application

Temperature range for applications in domestic hot water circulation systems at maximum ambient temperature of +40 °C	+2 °C...+70 °C
Temperature range for applications in domestic hot water circulation systems at maximum ambient temperature of +40 °C in short-time duty 4 h	+75 °C
Max. permitted total hardness in domestic hot water circulation systems	35.7° fH/ 20° dH

Description

Stratos-Z

- High-efficiency pump electronically controlled
- Circulating pump with minimum operating costs, for pipe installation
- For use in drinking water circulation systems
- With built-in electronic power control for constant/variable differential pressure
- One-button manual operation level for:
  - Pump On/Off
- Selecting the control mode:
  - Δp-c (differential pressure constant)
  - Δp-v (differential pressure variable)
  - Δp-T (differential pressure temperature-controlled) by means of IR-Monitor/ IR-Module/IR-Stick, Modbus, BACnet, LON or CANopen
  - Q-Limit to restrict the maximum volume flow (setting only via IR-Stick)
  - Manual control mode (setting constant speed)
  - Automatic setback operation (self-learning)
  - Setpoint and speed adjustment
- Rotatable, graphical pump display, horizontal and vertical module mounting, for display of:
  - Operating status
  - Control mode
  - Differential pressure or rotation speed setpoint
  - Fault and alarm signals
- Synchronous motor using ECM technology with very high efficiency and high starting torque, automatic deblocking function
- Fault signal light, potential-free collective fault signal, infrared interface for wireless communication with IR-Monitor/IR-Stick operating and service device.
- 1 plug-in slot for Stratos IF-modules with interfaces for building automation (BA) or dual pump management (accessories: IF-modules Stratos Modbus, BACnet, LON, CANopen, PLR, Ext.Aus, Ext.Min, SBM, Ext.Aus/SBM or DP)

Δp-v	Differential pressure variable
	Control signal / interface
Δp-c	Differential pressure constant

Motor
Voltage 1 x 230 V, frequency 50/60 Hz
Protection class IP X4D
Insulation class F
Integrated motor protection

Medium temperature
at max. ambient temperature
+40 °C: 0 °C...+80 °C

Max. permitted total hardness in domestic hot water circulation systems 35.7° fH (20° dH).

Connections
DN 30
With external thread including seals (without fittings)

DN 40 with flange connections without counterflanges, screws and seals incl. washers for flange screws (PN6/10)

Design on request
Compensation pieces for adapting the installation length with replacement pumps see chapter “Type comparison”

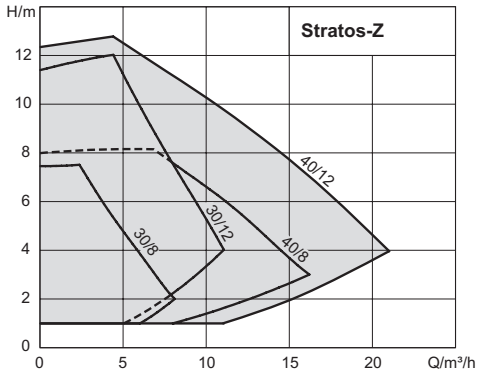

Part No.

High-efficiency pump Stratos-Z
with external thread without fittings

Part No.

- High-efficiency pump with operating mode switch and LCD
- Pump housing made of red brass
- With external thread without fittings
- Thermal insulation jacket

Medium temperature 0 °C...+80 °C
Max. permitted total hardness 35.7° fH/ 20° dH

Wilo	Hoval					
Stratos-Z	Nominal diameter DN	Delivery head mWC	Overall length mm	Connection G	Rated pressure PN	
30/1-8	30	8	180	2″	10	2064 710
30/1-12	30	12	180	2″	10	2064 711

Type key Hoval

Example	**Stratos-Z 30/8 180 RG**
Stratos-Z	High-efficiency pump
30	Nominal diameter
6	Delivery head (mWC)
180	Overall length (mm)
RG	Red brass CC499K

Type key Wilo

Example	**Stratos-Z 30/1-8**
30/	Nominal connection diameter
1-8	Nominal delivery head range (m)

Accessories

Screw fittings brass
2 fittings
Version brass incl. seals

Type	G	Rp	
VSM31	2″	1¼″	6022 618
VSM32	2″	1″	6042 941
VSM33	2″	1½″	6042 942

Special screw fittings brass VLM31 6040 865
Version brass with external thread
and internal hole for solder connection
incl. seals.
2 x screw fittings
External screw fittings: G 2″ and R 1¼″
Internal diameter: 35 mm

Connection set AS32-KH 6041 912
Connection set for pumps DN 32 - G 2″
consisting of 2 ball valves brass
incl. seals

Part No.

High-efficiency pump Stratos-Z
with flange connections

Part No.

- High-efficiency pump with operating mode switch and LCD
- Pump housing made of red brass
- Without counterflanges, screws and seals
- Thermal insulation jacket

Medium temperature 0 °C...+80 °C
Max. permitted total hardness 35.7° fH/ 20° dH

Wilo	Hoval				
Stratos-Z	Nominal diameter DN	Delivery head mWC	Overall length mm	Rated pressure PN	
40/1-8	40	8	220	6/10	2064 712
40/1-12	40	12	250	6/10	2064 713

Type key Hoval

Example	**Stratos-Z 40/8 220 RG**
Stratos-Z	High-efficiency pump
40	Nominal diameter / flange
8	Delivery head (mWC)
220	Overall length (mm)
RG	Red brass CC499K

Type key Wilo

Example	**Stratos-Z 40/1-8**
40/	Nominal connection diameter
1-8	Nominal delivery head range (m)

Accessories

Threaded flanges
2 threaded flanges, galvanised design
incl. screws and seals.
Delivery with pump (separately packed).

DN	PN	Rp	
40	6	1½″	6041 573
40	10/16	1½″	6041 574

Sealing kit for flanges
Consisting of screws and seals.
Delivery with pump (separately packed).

DN	PN	
40	6	6041 273
40	10/16	6041 274

Part No.

	Part No.
 **IR stick** USB stick for wireless data exchange for Wilo pumps with infrared interface, adaptable to Windows laptops with USB interface. The IR stick, in connection with the provided software (CD-ROM), enables you to access and store pump data sets as well as send pre-defined pump settings.	2064 594
 **IR monitor** Operation and service unit for wireless remote control and remote diagnosis for wilo-pumps with infrared interface. Robust plastic housing with graphic display and 1-button operation.	2064 595
 **IF modules** Retrofittable plug-in modules for extending the pump functions, for digital interfaces or for connection to the building management system	
Interfaces for TopTronic® E	
Interface Ext. Off / SBM	2064 604
Interface Ext. Off / 0-10 V	2064 601
Interface SBM / 0-10 V	2064 603
Interface Ext. Min / 0-10 V	2064 602
Interfaces for building automation	
Interface Modbus RTU	2064 596
Interface LON	2064 599
Interface CANopen	2064 598
Interface BACnet MS/TP	2064 597
Interface PLR	2064 600
Dual pump management (Modbus, BACnet, CANopen)	
Interface DP	2064 605

■ Technical data / Pump curves

Stratos-Z 30/8, 30/12

Pump curves

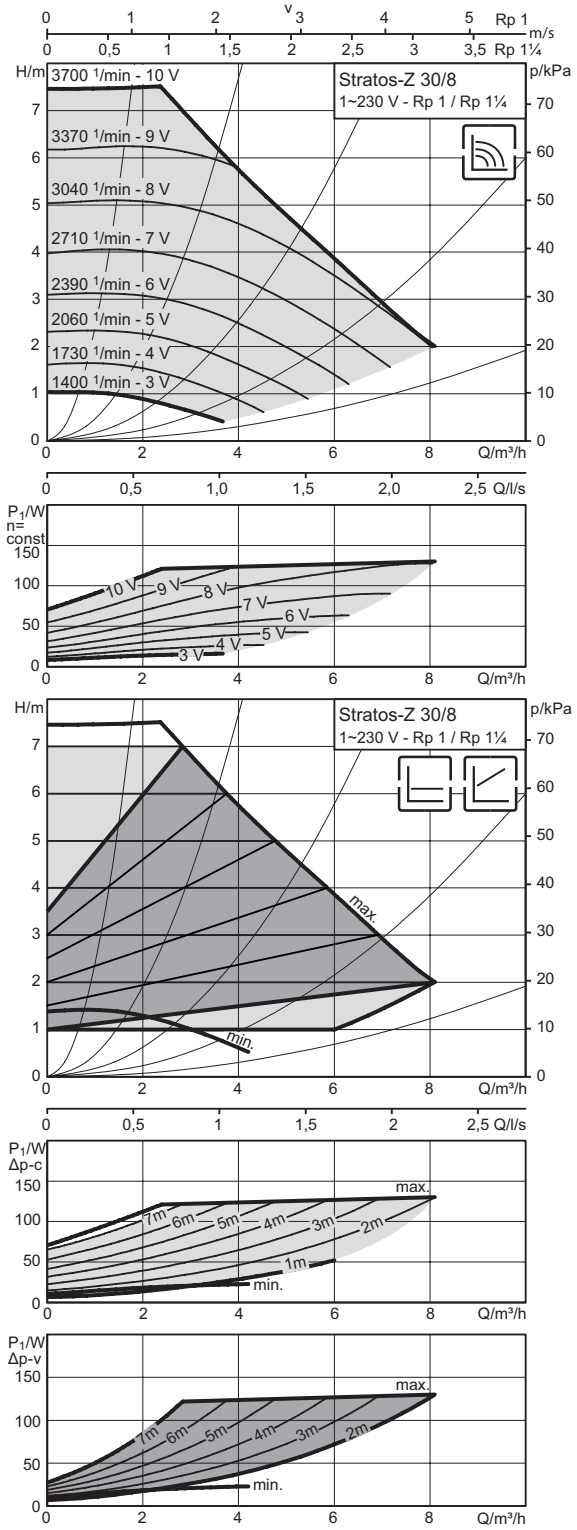

Pump curves

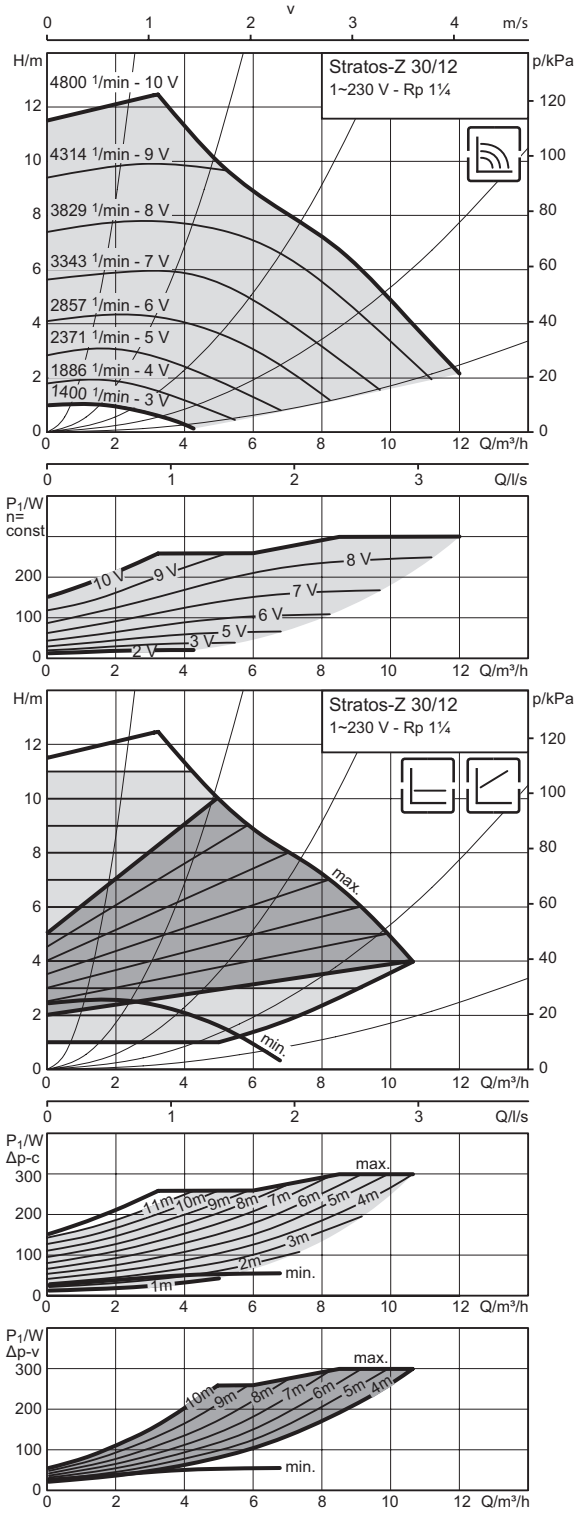

Technical data / Pump curves

Dimension drawing

Stratos-Z 30/8

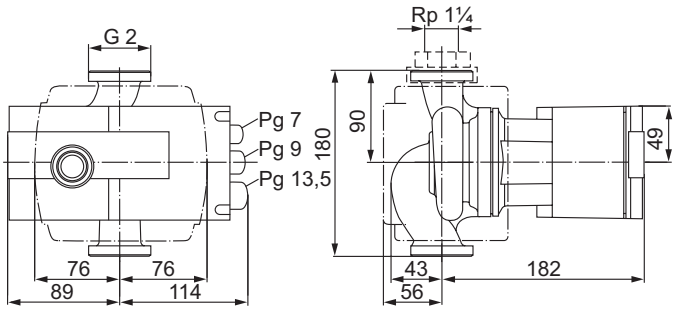

Dimension drawing

Stratos-Z 30/12

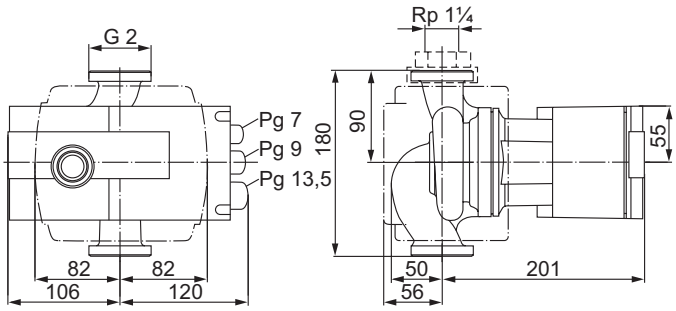

Technical data

Designation	Stratos-Z 30/8	Stratos-Z 30/12
Energy efficiency index (EEI)	≤ 0.20	≤ 0.20
Threaded pipe union	Rp 1¼	Rp 1¼
Rated pressure	PN 10	PN 10
Mains connection	1~230 V, 50/60 Hz	1~230 V, 50/60 Hz
Speed *n*	1400 - 3700 1/min	1400 - 4800 1/min
Rated power P_2	100 W	200 W
Power consumption P_1	9 - 125 W	12 - 300 W
Current consumption / Starting current [1]	0.13 - 1.10 A / 8 A	0.22 - 1.32 A / 8 A
Separate power relay with direct connection via 230 V required (applies to all TTE controller modules and module expansions)	NO	NO
Minimum suction head at 50 / 95 / 110 °C	3 / 10 / 16 m	3 / 10 / 16 m
Weight approx. *m*	4.5 kg	6 kg

Materials	
Pump housing	Red brass (CC 499K) according to DIN 50930-6, in accordance with Drinking Water Ordinance
Impeller	Plastic (PPS - 40 % GF)
Pump shaft	Stainless steel (X39CrMo17-1)
Bearing	Carbon, synthetic resin impregnated

[1] Note starting current

Terminal diagram

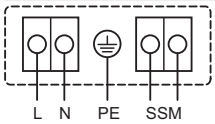

SSM:
Collective fault signal
(NC contact according to VDI 3814, load capacity 1 A, 250 V ~)

Approved fluids (other fluids on request)

Domestic water and water for foodstuffs companies according to regulation by the EDI on domestic, source and mineral water or drinking water regulations such as TrinkwV 2001

Permitted field of application	
Temperature range for applications in domestic hot water circulation systems at maximum ambient temperature of +40 °C	0 °C...+80 °C
Max. permitted total hardness in domestic hot water circulation systems	35.7° fH/ 20° dH

Technical data / Pump curves

Stratos-Z 40/8, 40/12

Pump curves

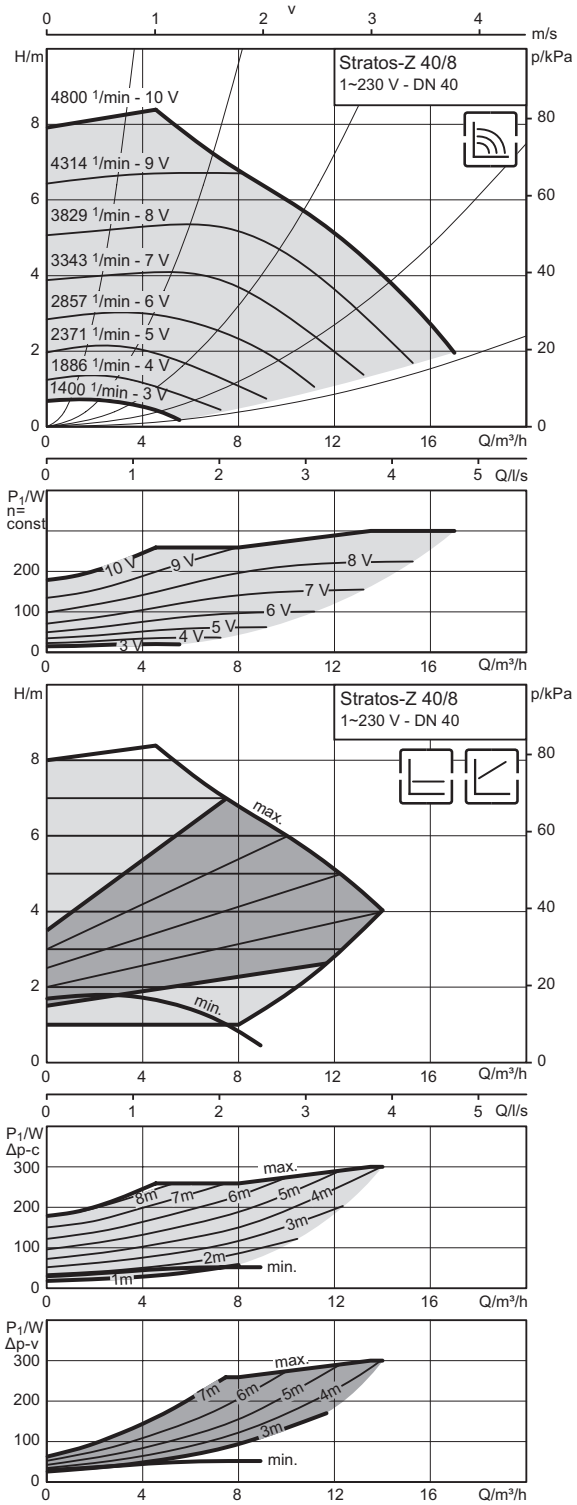

Pump curves

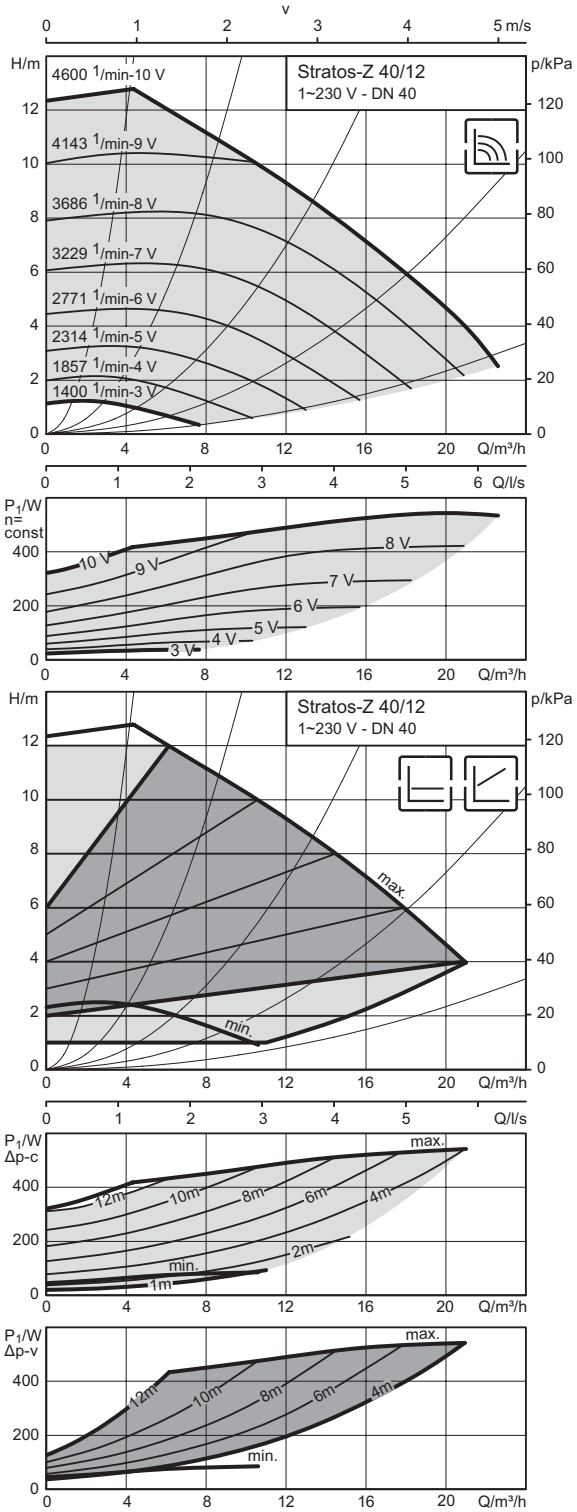

Technical data / Pump curves

Dimension drawing

Stratos-Z 40/8

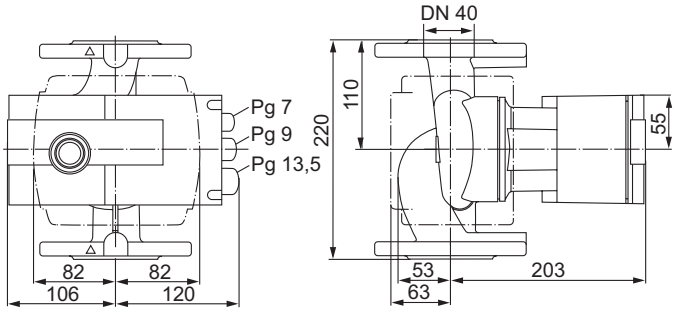

Dimension drawing

Stratos-Z 40/12

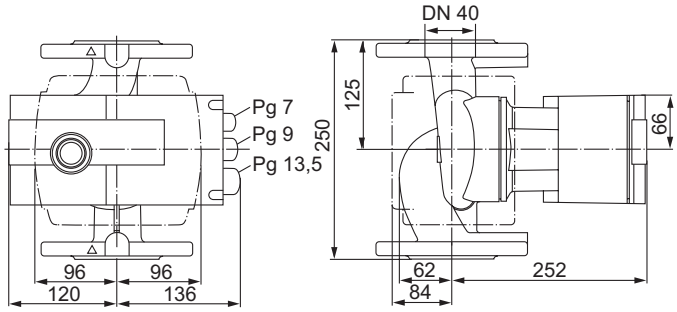

Dimension drawing, flange

PN 6/10

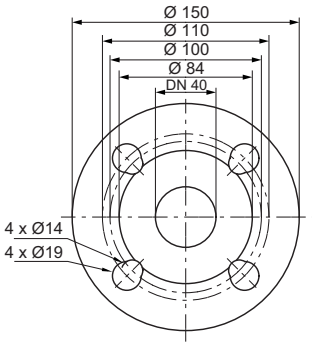

Technical data

Designation	Stratos-Z 40/1-8	Stratos-Z 40/1-12
Energy efficiency index (EEI)	≤ 0.20	≤ 0.20
Nominal diameter, flange	DN 40	DN 40
Rated pressure	PN 6/10	PN 6/10
Mains connection	1~230 V, 50/60 Hz	1~230 V, 50/60 Hz
Speed *n*	1400 - 4800 1/min	1400 - 4600 1/min
Rated power P_2	200 W	450 W
Power consumption P_1	12 - 300 W	25 - 550 W
Current consumption / Starting current [1]	0.22 - 1.32 A / 8 A	0.20 - 2.40 A / 8 A
Separate power relay with direct connection via 230 V required (applies to all TTE controller modules and module expansions)	NO	NO
Minimum suction head at 50 / 95 / 110 °C	3 / 10 / 16 m	5 / 12 / 18 m
Weight approx. *m*	11 kg	16 kg

Materials	
Pump housing	Red brass (CC 499K) according to DIN 50930-6, in accordance with Drinking Water Ordinance
Impeller	Plastic (PPS - 40 % GF)
Pump shaft	Stainless steel (X39CrMo17-1)
Bearing	Carbon, synthetic resin impregnated

[1] Note starting current

Terminal diagram

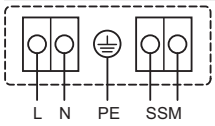

SSM:
Collective fault signal
(NC contact according to VDI 3814, load capacity 1 A, 250 V ~)

Approved fluids (other fluids on request)

Domestic water and water for foodstuffs companies according to regulation by the EDI on domestic, source and mineral water or drinking water regulations such as TrinkwV 2001

Permitted field of application

Temperature range for applications in domestic hot water circulation systems at maximum ambient temperature of +40 °C	0 °C...+80 °C
Max. permitted total hardness in domestic hot water circulation systems	35.7° fH/ 20° dH

General information

Pump selection: General notes
Circulating pumps should always be selected so that the specified duty point is located at or as near as possible to the point of maximum efficiency (optimum volume flow) of the maximum speed H/Q pump curve.

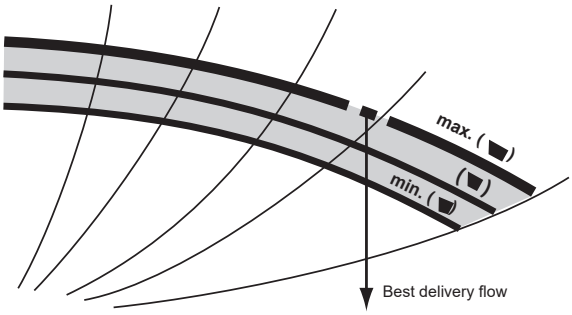

Pump characteristic curve

If the specified duty point lies between two pump curves, then the smaller pump is always to be selected.

The resulting volume flow reduction has no appreciable effect on the actual heating output in heating systems. This applies to pumps for cooling systems.

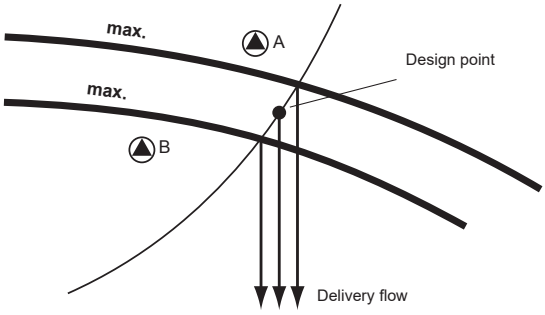

Pump selection

Selecting the control mode

Control mode Δp-v (variable)

In Δp-v control mode, the electronic module changes the differential pressure setpoint to be maintained by the pump in linear fashion between Hs and ½ Hs. The differential pressure setpoint value H varies with the volume flow Q.

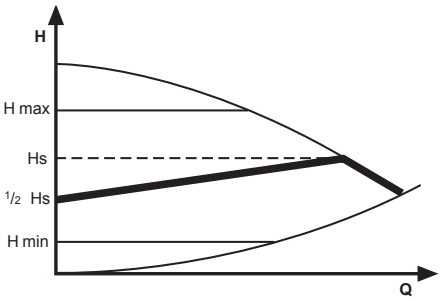

This regulation is suitable in particular for the following systems:
- Two-pipe heating systems with thermal valves and long line runs
- Valves with large working range and high pressure drops
- Underfloor heating with thermostatic valves and high pressure drops
- Systems with primary circuit pumps with high pressure drop

Control mode Δp-c (constant)

In Δp-c control mode, the electronic module keeps the differential pressure generated by the pump constant at the set differential pressure setpoint HS over the permissible volume flow range.

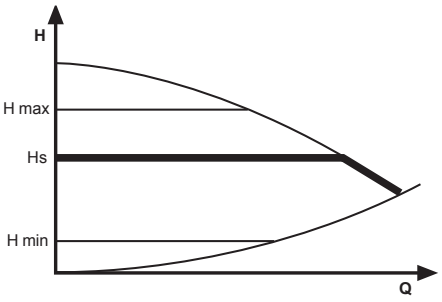

This regulation is suitable in particular for the following systems:
- Two pipe systems with thermostatic valves and
- delivery head greater than 2 m
- Small pressure drop, large pipe dimensions
- Underfloor heating with thermostatic valves
- One pipe heating systems with thermostatic valves and with control valves
- Systems with primary circuit pumps with low pressure drop

Control mode (constant speed)

The internal pressure control is switched off in this control mode. The speed of the pump can be set manually or by an external signal (additional module 0-10 V) to a constant value.

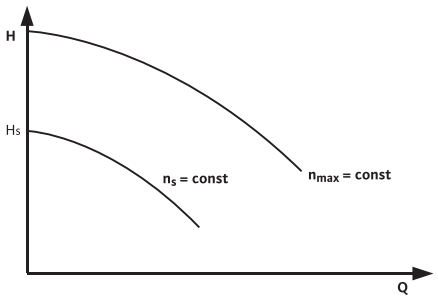

This control mode is particularly suited to systems with constant pressure relationships (heat exchangers, boiler feed pumps, etc.) or with external system control.

General information

Δp-v control mode with Dynamic Adapt (only Stratos PICO plus)
Dynamic Adapt is the dynamic adaptation of the setpoint in the pump's partial load range at less than half of the intended flow volume. Starting from the set value, the pump analyses the heat requirement, and, based on this analysis, the established setpoint is continuously corrected operating in partial load mode. In this way, the pump output is continuously optimised within a "Dynamic Adapt" control range up to the energetic minimum. For very small volume flows, the pump goes into a hydraulic standby for this. If the volume flow increases due to higher heat requirement, the performance will increase automatically. The short reaction time prevents the heating system from being under-supplied.

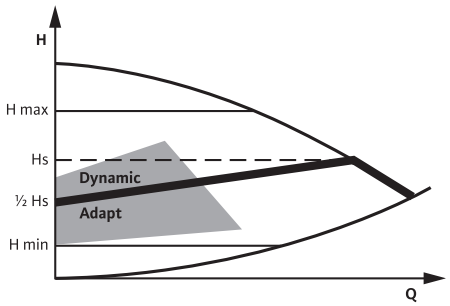

Dynamic adapt plus (only Stratos MAXO)
The new control function adapts the transport height automatically to the hydraulic requirement without need to define a set value. After initial commissioning, the Stratos MAXO chooses an operating point in the centre of the pump performance chart. Depending on the change in the flow rate, new operating points are set. The objective of the control is to choose the operating point in such a way that the valves are open as much as possible. This allows the installation to be operated with the lowest possible pressure drop. The adjustment to variable pressure conditions is carried out automatically and independently. Energy savings up to 20 % compared to the control Δp-v.

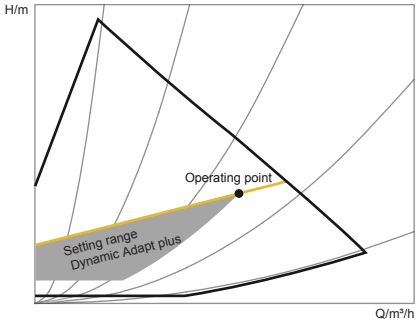

Control signals 0...10V, PWM
The functions associated with the analog control signal 0-10V and the available PWM logic are described in the following section.

Control input "Analog In 0 ... 10 V" without cable break function:

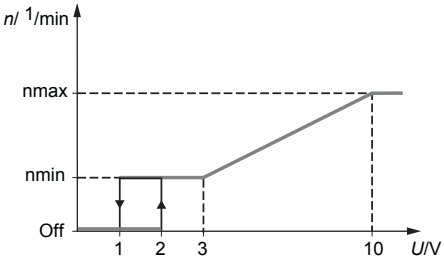

U < 1 V:	Pump stops
2 V < U < 3 V:	Pump running at minimum speed (start)
1 V < U < 3 V:	Pump running at minimum speed (operation)
3 V < U < 10 V:	Speed varies between n_{min} and n_{max} (linear)

Notice
To ensure interference resistance the total length of the 0-10 V control line should not exceed 15 m.

"PWM" control input PWM 1 heating:

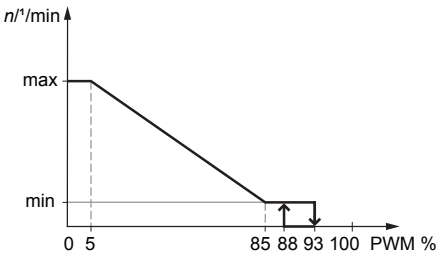

< 5:	Pump running at maximum speed
5-85:	The speed of the pump decreases linearly from n_{max} to n_{min}
85-93:	Pump running at minimum speed (operation)
85-88:	Pump running at minimum speed (start)
93-100:	Pump stops (standby)

Notice
To ensure interference resistance the total length of the PWM control line should not exceed 3 m.

PWM 2 Solar:

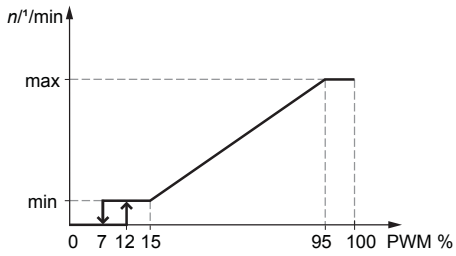

0-7:	Pump stops (standby)
7-15:	Pump running at minimum speed (operation)
12-15:	Pump running at minimum speed (start)
15-95:	The speed of the pump increases linearly from n_{min} to n_{max}
> 95:	Pump running at maximum speed

Notice
To ensure interference resistance the total length of the PWM control line should not exceed 3 m.

General information

Limitation on the flow rate "Q-Limit" - only Stratos, Stratos-Z, Stratos-D
The "Q-Limit" operating mode can be combined with the other control modes (Δp-v, Δp-c, Δp-T, controller), which makes it possible to limit the maximum volume flow to 25% - 90% of Qmax.

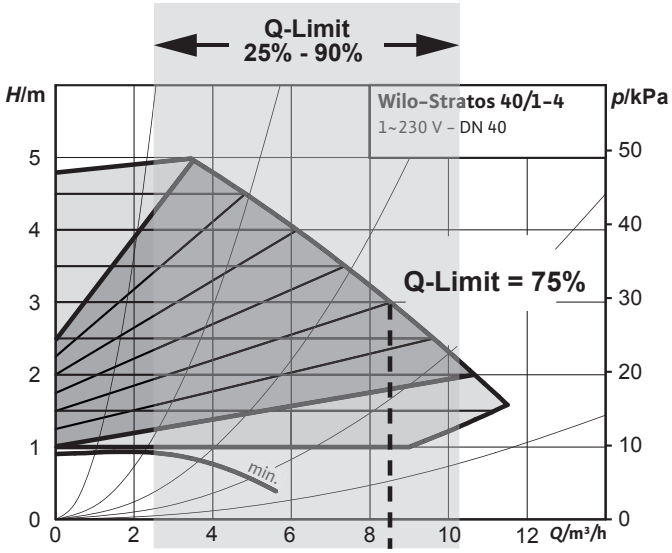

In the event of an excess supply by the differential pressure control (Δp-c, Δp-v), the IR-Stick (accessory) can be used to limit the maximum value (pump software version SW ≥ 6.0). When the set value is reached, the pump is controlled on the pump curve along the limit - never beyond.

Notice:
"Q-Limit" can only be set using the IR-Stick (accessory). If "Q-Limit" is used in non-hydraulically balanced systems, partial areas can be undersupplied. Therefore, always perform hydraulic balancing.

General information

Domestic hot water circulation systems
- The heat losses in the domestic hot water ascending and circulating pipes are to be reduced to a minimum by appropriate insulation.

Since most domestic hot water circulation systems permit periodic circulating pump deactivation (as a rule at night), a time switch should be included in the standard equipment for automatic ON/OFF operation. We recommend periodic pump activation/deactivation. Legionella switching of the heat generator or the heating controller are to be observed and taken into account during programming.

Maximum domestic water temperature
In view of the hardness-forming components contained in the water, domestic hot water circulation systems should not be operated at temperatures above 65 °C.
This limit is required to avoid the formation of lime deposits.

Circulation line
We recommend the installation of a gravity brake in order to prevent faulty circulation and to prevent gravity circulation in pumps that have been shut down.

Variable speed control
Experience shows that variable speed control is only required in circulating pumps in domestic hot water circulation systems for the basic adjustment of the performance. An automatic speed control is not required. Time-dependent activation/deactivation should however be provided for each installation.

Motor protection
Blocking current-proof pumps and pumps with internal protection against unacceptably high winding temperatures do not require motor protection. All other pumps have integrated full motor protection including trip electronics or full motor protection (WSK) in conjunction with an external tripping unit.

Pump output splitting
General information about double pumps
- Two pump heads mounted in a common housing, hydraulically separated by a switchover valve
- Specific design characteristics like with corresponding single pump series
- Replacement of an equally powerful single pump with identical installation dimensions
- Wide field of application due to standard 3-stage circuit or speed control

Pump output splitting
Splitting the assigned maximum design output to a **double pump in parallel operation** enables - particularly in terms of heating - significantly improved **adaptability to partial-load conditions and optimum economic efficiency**. The operation of a **single pump** is sufficient for the average seasonal partial load pump power, i. e. over 85 % of the heating season; the **second pump** is available for **parallel operation** for the occasionally required full load requirement.
Advantages of output splitting between two pumps:

- Reduction of running costs by between 50 % and 70 %
- Increased reliability due to the constant availability of a standby unit ready for operation

The individual performance maps for double pumps featured in the relevant chapters specify the hydraulic performance values for both individual and parallel operation.

Operating modes for double pumps
Double pumps are suitable for operation in either of two basically different operating modes:
- Main/standby mode
- Parallel operation

In the event of a fault, genuine working safety is only guaranteed if double pump operation is carried out using a Y-branch pipe installation with two individual pumps.

General information

Main/standby mode (ADDITION)

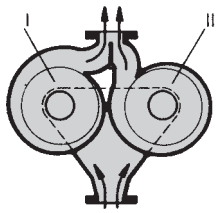

Both pumps in operation
The designed pump output is provided by both pumps in parallel operation.
In part-load status, one pump can be switched off.

Parallel operation (RESERVE)

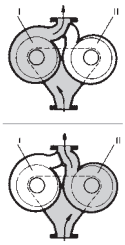

Pump I or pump II in operation
The version-specific pump output is provided by whichever of the two pumps is acting as the main pump; the other pump remains in standby, ready for time-actuated or fault-actuated switchover.

Flow rates in pipe and pump
The flow rate of the fluid in the pipework is determined by the cross-section sizes. The values listed below should not be exceeded:

Nominal connection diameter DN [Ø mm]	Flow rate v [m/s]
In building installations	
Up to Rp 1¼ or DN 32	up to 1.2
DN 40 and DN 50	up to 1.5
DN 65 and DN 80	up to 1.8
DN 100 and larger	up to 2.0
In district heating pipes	2.5 to max. 3.5

The flow rates [m/s] in the pump are specified in all duty charts for Wilo pumps as a function of the pump output.

Approved fluids (other fluids on request)

Heating water (according to Hoval engineering guidelines or VDI 2035)

Water-glycol mixtures
(max. 1:1 after 20 % admixture the pumping data is to be checked)

Domestic water and water for foodstuffs companies according to regulation by the EDI on domestic, source and mineral water or drinking water regulations such as TrinkwV 2001

Viscous fluids
All pump curves included in the catalog apply to the pumping of water (kinematic viscosity = 1 mm^2/s). The hydraulic values of the pump and the pipe system will deviate when pumping fluids of different density and/or viscosity (e.g. water/glycol mixtures)! Documents on the **calculation of the correction values for the selection of the pumps** are available.

Correction values for the pipe system (increased pressure drop, specific thermal output deficit) cannot be provided by the pump manufacturer. They must be determined by the consultant in cooperation with the manufacturers of the additives and valves.

Minimum inlet pressure for the prevention of cavitation
To prevent cavitation (vapour bubble formation within the pump), it is necessary to maintain a sufficiently high over pressure (suction head) at the pump suction port in relation to the vapour pressure of the fluid being pumped.

The minimum suction heads are listed in the respective tables for all glandless pumps. These guidance values apply to heating systems up to 110 °C/130 °C feed temperature and an installation location up to 300 m above sea level. Supplement for higher altitudes: 0.1 m/100 m increase in altitude.
The values must be increased accordingly when pumping fluids of higher temperatures or lower densities, where there is greater flow resistance on the pump suction side, and in regions of lower atmospheric pressures.

General information

Notes on the installation and operation

Installation
Installation within a building
Glandless pumps must be installed in dry, well-ventilated, frost-free rooms.

Installation outside a building (outdoor installation)
The glandless pumps of the following series are suitable for outdoor installation:
- Stratos
- Stratos-D

The following conditions must be complied with:
- Installation of the pump in a chamber (e.g. light well, ring chamber) with cover or in a cabinet/housing for protection against the weather
- Avoid exposure of the pump to direct sunlight
- The pump requires protection so that the condensate drain grooves are not contaminated
- Protect the pump against rain. Dripping water from above is permitted provided that the electrical connection has been established in accordance with the installation and operating instructions and the terminal box has been properly sealed
- Provide adequate ventilation/heating in situations where the permitted ambient temperature is exceeded or fallen short of
- Permissible ambient temperature for outdoor installation:
  - Stratos/-D: -10 °C to +40 °C

Condensation water
All standard pumps for cold water operation that can be used down to -10 °C are fully condensation water-proof. The grey cast iron pump housing of the following series
- Stratos
- Stratos-D
- SPS-I
  are provided with special coating (CDP: cathodic dip painting).

The benefits of this coating are:
- Optimum corrosion protection against condensation formation on the pump housing in cold-water systems
- Very high scratch and impact resistance

Intermittent operation
The series
- Stratos/Stratos-D/Stratos-Z
- Stratos PICO plus/ECO
- Yonos PICO

can also be used for intermittent operation.

Operating pressure
The maximum system pressure (operating pressure) and the flange versions for the pumps are listed in the relevant tables. All flanges on glandless pumps (except Stratos, Stratos-Z, Stratos-D) have R 1/8 pressure-measurement connections.

Connections
Screw-end pumps
Screw-end pumps are equipped with connecting threads in accordance with EN ISO 228, Part 1. Gaskets are included in the scope of delivery. Pipe unions with pipe thread in accordance with EN 10226-1 must be ordered separately.

EN 10226-1 (pipe thread sealing in the thread)
- Female pipe thread Rp 1½
- Male pipe thread R 1½

EN ISO 228/1 (front-side sealing pipe thread with flat gasket)
- Female pipe thread G 1½
- Male pipe thread G 1½

Flange-end pumps
The pump flanges are designed according to EN 1092-2.
Detailed information is provided for the respective pump series.

Combination flange pumps
Flange-end pumps with combination flanges can be mounted with mating flanges PN 6 and PN 16 in accordance with DIN or EN up to and including DN 65. Mounting a combination flange with a combination flange is not permitted. Screws with a strength class of 4.6 or higher are to be used for the flanged connections. The washers included in the scope of delivery must be installed between the screw/nut head and the combination flange.
Recommended screw lengths:

Flange connection	Thread	Tightening torque	Min. screw length	
			DN32/ DN40	DN50/ DN65
PN6	M12	40 Nm	55 mm	60 mm
PN10	M16	95 Nm	60 mm	65 mm

Motor
- Glandless pump motors with protection class
  - IP X2D: Yonos PICO
  - IP X4D: Stratos PICO plus, Stratos
  - IP 42: remaining pump program
- Thermal class
  - F/H
- Emitted interference
  - EN 61000-6-3
- Interference immunity
  - EN 61000-6-2

Electrical connection
- All pumps are intended for a voltage of 230 V or 400 V (tolerance ±10 %) in accordance with EN 60038.
- When pumps are used in systems with fluid temperatures above 90 °C, a suitably heat-resistant connection pipe must be used.

General information

Electrical connection possibilities for system pump sets SPS-S and SPS-Z

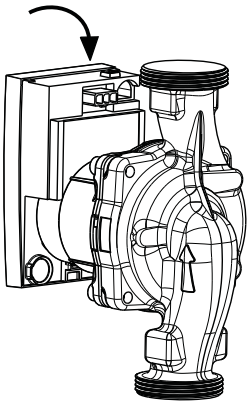

Molex connection
(integrated in the electrical housing)

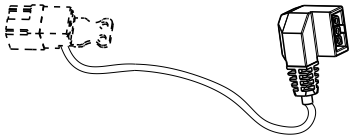

Molex connection system (SMO)
for direct connection to TopTronic® T or TopTronic® E (included in the scope of delivery)

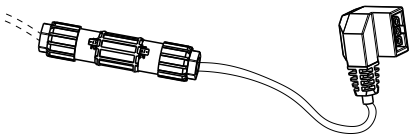

Molex connection system (SMO) with cable connector (included in the scope of delivery)
for old systems, exchange and/or cramped conditions

Electrical connection possibilities for system pump set SPS-I

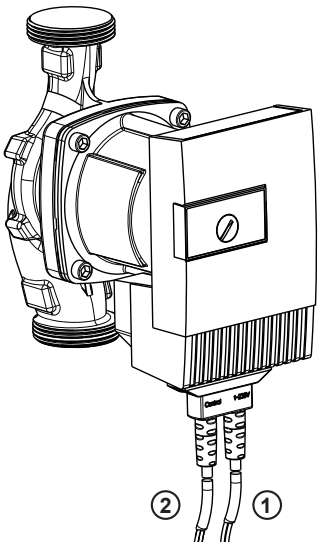

Electrical connection cable firmly wired to the pump

① **Power cable** for control mode

② **Connection cable** for control signals 0-10 V, PWM 1 (heating), PWM 2 (solar)

[1] Type plate identification T

T2	=	0-10 V
T22/T10	=	PWM 1 (heating)
T24	=	PWM 2 (solar)

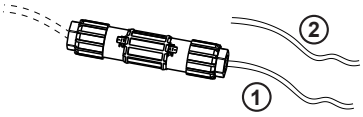

① Cable connector (included in the scope of delivery) for power cable connection
② Control signal cable for interface with pump control

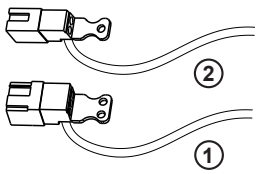

Connection cable
for TopTronic® T and TopTronic® E for new installations and exchange.
① Power cable (Rast-5 plug included in the scope of delivery)
② Control signal (Rast-5 plug included in the scope of delivery)

All other circulating pumps are equipped with the connector or with terminal connections.

General information

Electrical connection possibilities for Hoval HSP

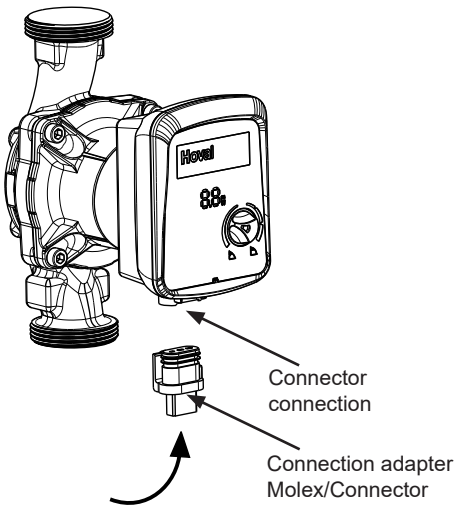

Connector/Molex connection with connection adapter
(included in the scope of delivery)

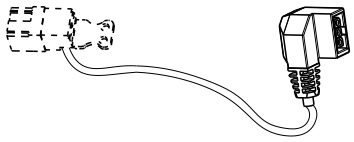

Molex connection system (SMO)
for direct connection to TopTronic® T or TopTronic® E
(with SPS-A included in the scope of delivery)

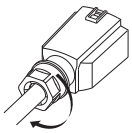

Connector connection
for new installations and exchange (included in the scope of delivery)

Notice
Hoval system components such as circulating pumps and heating armature groups have been equipped with Molex connectors since 2007.

General information

Molex/Connector connector systems

The connection adapter is used as a transition piece between a Connector and a Molex connection.

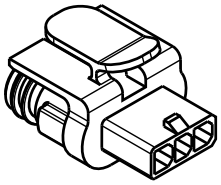

Molex/Connector connection adapter

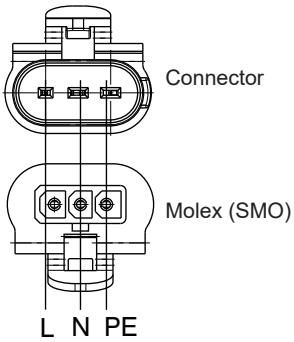

Cable connector - function

The cable connector permits straightforward connection of the pump cable if there is no suitable connection system available.

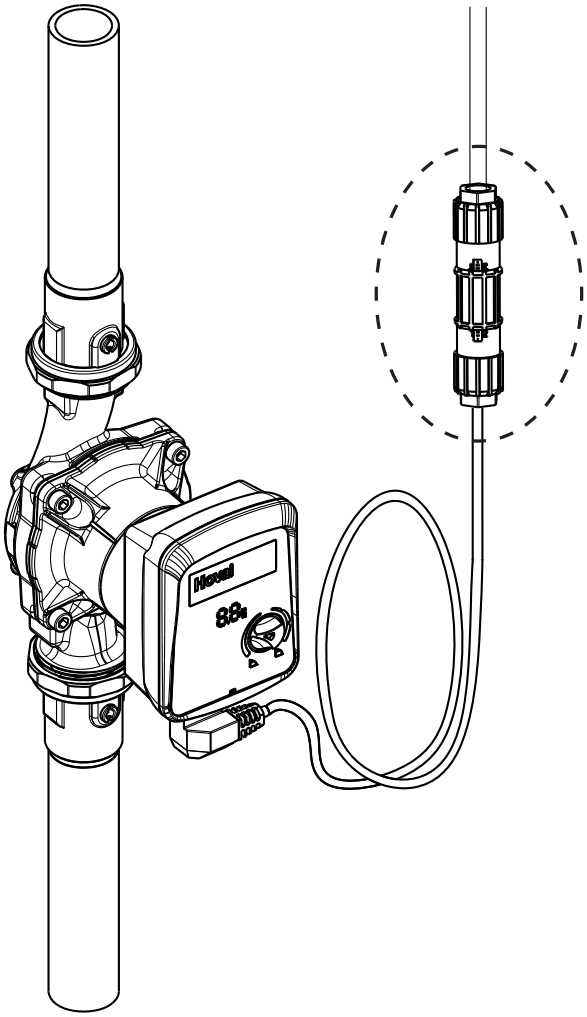

General information

Electrical connection Connector

The Connector is the ideal solution if there is no Molex connection available. Following installation without tools, the electrical connection can be made easily by plugging the Connector onto the pump.

1

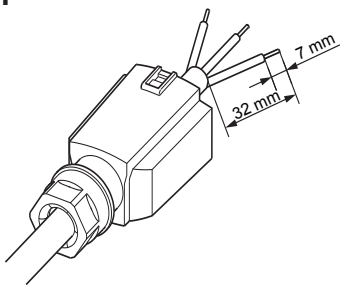

2

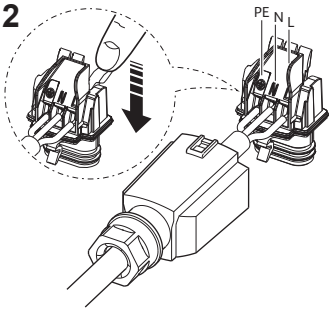

3

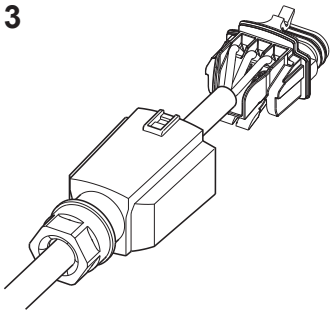

4

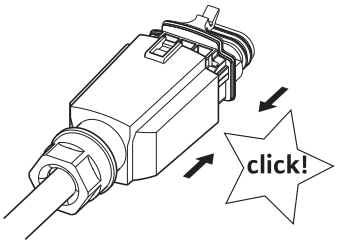

5

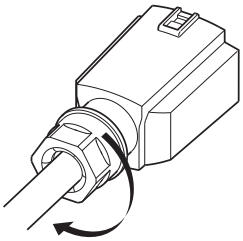

6

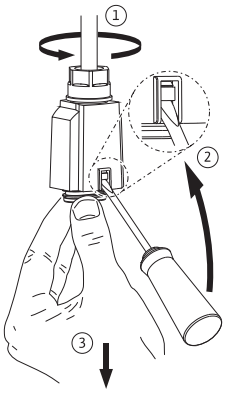

General information

RCCB protection
All pumps can be used without restrictions even
in existing installations with and without RCCB circuit breakers.

Attention:
For high-efficiency pumps with AC current connection (Yonos PICO, Stratos PICO plus, Stratos PICO-Z, Stratos, Stratos-D, Stratos-Z), operation on residual-current operated protection devices is permitted in accordance with SN EN 61008-1 without any impairment of the operation of the residual-current device (SN EN 50178). For energy-saving pumps with three-phase connection (series IP-E/DP-E, IL-E/DL-E), the residual-current-operated protection circuits must be implemented as selective universal current-sensitive (trigger current 300 mA).

Suitable RCCB circuit breakers can be identified by:

Electronic output regulation
Heating pumps are, due to their high annual operating hours, among the largest power-consuming appliances in buildings. Automatic pump performance control helps drastically to reduce power consumption in heating pumps. Reductions of up to 50 % can thus be achieved. Compared to standard pumps, high-efficiency pumps can even save up to 80 % electricity costs.

All operating states, in particular in the partial load range that is typical for heating systems, can be optimised hydraulically by means of automatic pump performance control.
A further significant effect connected with the prevention of a rise in pump pressure is the avoidance of flow noise in thermostatic valves.

General information

Standards/Directives
- CE marking (all Wilo pumps placed on the market in the EU)
- CE certification acc. to:
  - EN ISO 9001
  - EN ISO 14001

Characteristic curves
The pump curves apply to water at +20°C and a kinematic viscosity of 1 mm^2/s.
The pump curves take the European voltages of 230 V and 400 V into account.

Open/closed-loop pump control
The electrical operating conditions according to EN 50178 must be complied with when operating the pumps with control units or module accessories.
When operating glandless and glanded pumps with brands of frequency converters other than those supplied by Wilo, output filters for reducing motor noise and for preventing harmful voltage peaks are to be used and the following limit values are to be complied with:
- Glandless pumps with $P_2 \leq 2.2$ kW
  and glanded pumps with $P_2 \leq 1.1$ kW
  Speed of voltage rise du/dt < 500 V/µs
  Voltage peaks û < 650 V
  For the noise reduction of glandless pump motors, it is recommended that sine filters (LC filters) be used rather than du/dt filters (RC filters).
- Glanded pumps with $P_2 \leq 1.1$ kW
  Speed of voltage rise du/dt < 500 V/µs
  Voltage peaks û < 850 V

Installations with long cable lengths (l > 10 m) between the converter and motor can increase the du/dt and û levels (resonance). The same applies to operation with more than 4 units at one power supply source. The output filters must be selected as recommended by the converter manufacturer or filter supplier. The pumps are to be operated at max. 95 % of their rated speed if the frequency converter causes motor losses.

Minimum volume flow
Larger pumps require a minimum flow rate to ensure trouble-free operation. Operating against a closed slide valve, volume flow Q = 0 m^3/h, can lead to overheating inside the pump.
- Limiting conditions for pump operation at Q = 0 m^3/h:
  harmless up to P2 = 1 kW if the medium temperature is 10 K lower than the maximum permissible medium temperature
- Above P_2 > 1 kW continuous duty,
  a minimum volume flow of Q = 10 % Q_{nom} is required
  Consultation is required regarding the limit ranges.

Motor protection
The service life and operational reliability of a circulating pump depend to a great extent on the correct motor protection being chosen. Motor protection switches are no longer suitable for multi-speed pumps, since their motors have different rated currents in the different stages and therefore require different fuses.

All circulating pumps are either:
- Blocking current-proof
- With internal protection against unacceptably high winding temperatures
- With full motor protection by an integrated tripping mechanism

For the exact equipment, see the "Motor data" table.

No other motor protection is required by the customer, unless demanded by the regional electricity supply company.

General information

Sound pressure level
Glandless pumps are low-noise due to their design. Their air-borne noise values with measuring-surface sound pressure level Lp (A) [dB] depend on the motor power output. These values were determined under normal operating conditions.

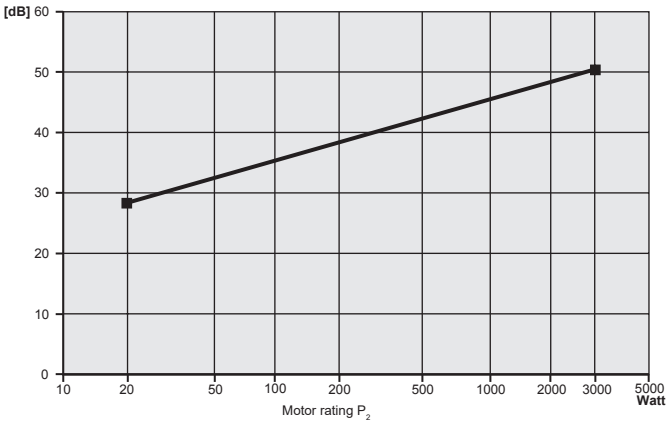

Lp (A) [dB], 2-pol. standard pumps (max. 2900 rpm) and Stratos series

Thermal insulation in heating applications
All HSP, Stratos/Stratos-Z and Stratos PICO plus single pumps are standard-equipped with insulating shells to prevent heat losses from the pump housing.

Material: EPP, polypropylene foam, thermal conductivity: 0.04 W/m K acc. to SN EN ISO 22007, flammability: class B2 acc. to SN EN 13501; FMVSS 302. When insulating the pump on-site, care must be taken to cover the pump up to the top edge of the pump housing only (the motor must be left uncovered).

Insulation for air-conditioning/cooling applications
If pumps from the series
- HSP, Stratos, Stratos-D, Stratos-Z

are used in air-conditioning/cooling applications, no diffusion-proof insulation is permitted to cover the drain labyrinth between the pump housing and the motor. That ensures that any condensate having possibly accumulated in the motor can drain off freely through the condensate drain openings in the motor housing.

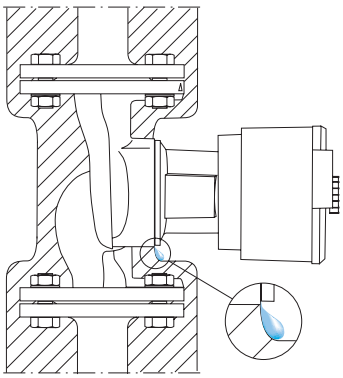

General information

The glandless circulating pump
With this design, all rotating components inside the canned motor run in the pumped fluid. The required shaft seal in conventional pump types achieved by the use of stuffing boxes or mechanical seals is omitted. The pumped fluid lubricates the shaft bearings and cools the components of the electric motor.

The electrical part of the pump motor (stator with winding) is separated from the encapsulated rotor compartment by a sealing tube sealed off with O-rings.

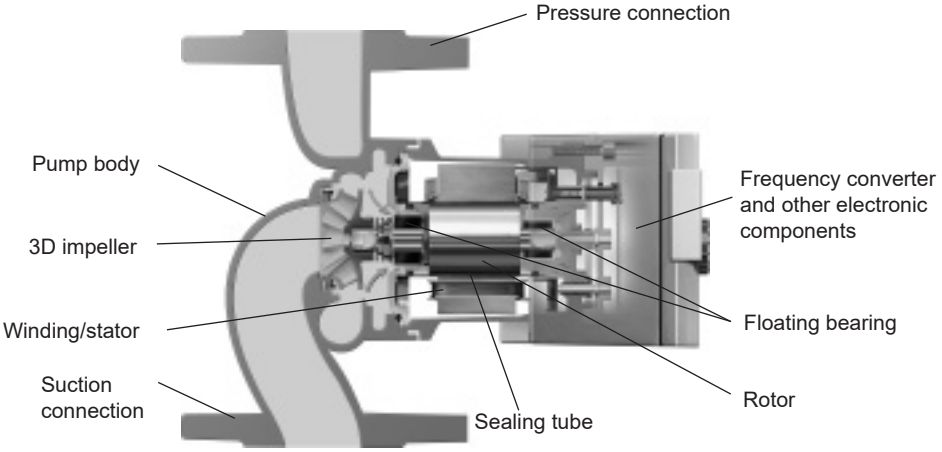

Permissible installation positions

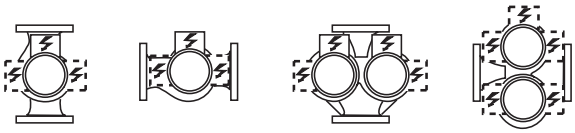

Permitted without restriction
All standard and domestic hot water circulating pumps, 1 or 3 speed stages

Installation positions not permitted

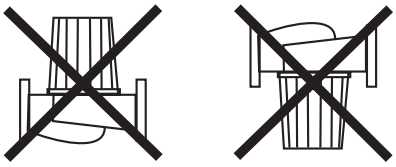

The Wilo pumps must be installed in the pipeline, however it is routed, without stress (in all operating conditions) with a horizontal shaft, with the terminal box at the top or to the side. The permitted installation positions are listed specifically in the corresponding installation and operating instructions of the pump.

Electrical connection of a three-phase pump 1~230V on the three-phase system 3~400V

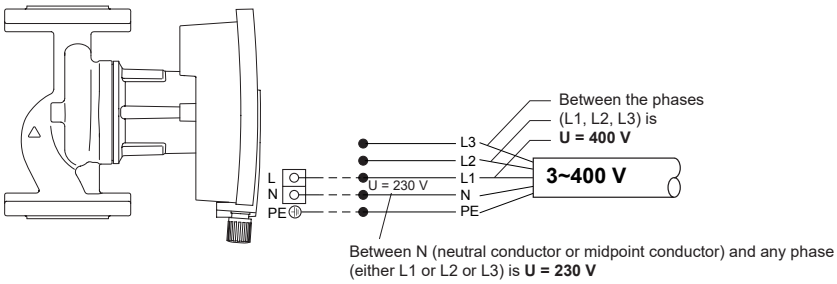

The voltage between any phase (L1, L2 or L3) and the neutral conductor N is U = 230 V. If there is no neutral conductor N then a new cable with neutral conductor must be laid. For special cases where no neutral conductor is feasible, we provide a Wilo transformer for connection of a 230-volt 1 ~ high-efficiency pump to an existing 400-volt 3 ~ connection cable.

General information

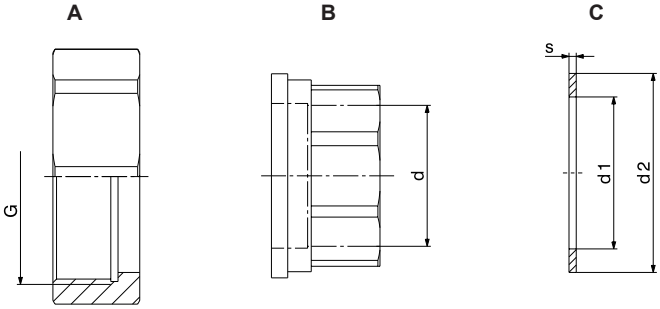

Pipe screw connections

DN	A	B	C
	G	*d*	*d1 / d2 x s*
15	G 1	Rp ½ Rp ¾	ø 21 / 30 x 2
20	G 1¼	Rp ¾	ø 27 / 38 x 2
25	G 1½	Rp 1	ø 32 / 44 x 2
30	G 2	Rp 1¼	ø 42 / 55 x 2

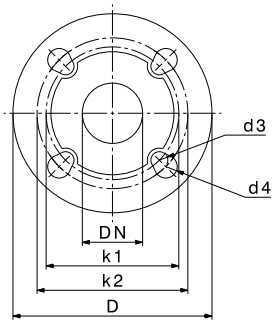

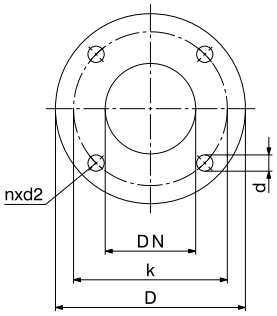

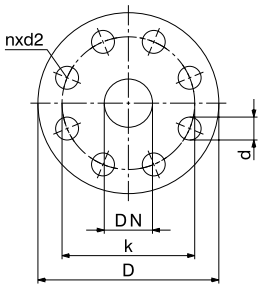

Combination flange
PN 6/10

DN	D	k1	k2	d3	d4
32	140	90	100	14	19
40	150	100	110	14	19
50	165	110	125	14	19
65	185	130	145	14	19

Flange
PN 6

DN	D	k	d	n x d2
32	120	90	14	4x M12
40	130	100	14	4x M12
50	140	110	14	4x M12
65	160	130	14	4x M12
80	190	150	19	4x M16
100	210	170	19	4x M16

Flange
PN 10/16

DN	D	k	d	n x d2
32	140	100	19	4x M16
40	150	110	19	4x M16
50	165	125	19	4x M16
65	185	145	19	4x M16
80	200	160	19	8x M16
100	220	180	19	8x M16

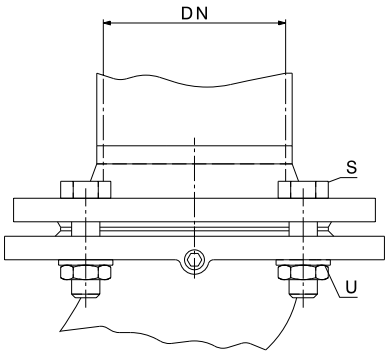

Up to nominal diameter DN 65, all pumps are equipped with combination flanges PN 6/10.
For a secure attachment (S), the supplied washers (U) must be mounted on the pump side.

Seal sets including the fastening elements (screws, nuts) are available for exchanging flange pumps.

General information

Information on the dangers associated with permanent magnetic motors with high-efficiency pumps
The interior of the glanded and glandless motors always generate a strong magnetic field that can cause injury and damage to property if dismantled incorrectly.

- The highly-magnetic components can cause fatal injury to people with medical implants during dismantling.
- In principle, motor components should be disassembled only by authorized personnel.
- It is vital that you follow the instructions and safety information in the installation and operating instructions for the respective pump.
- In assembled condition, the rotor's magnetic field is guided in the motor’s iron core. There is therefore no harmful magnetic field outside the machine.

Notice
According to **W3** (guidelines for creating DHW installations), only circulating pumps with corrosion-resistant pump housings made of stainless steel, red brass (CC 499 K) or brass (DZR or CR) are to be used for domestic hot water circulation systems.

Recirculation pumps
We recommend that recirculation pumps in hot water systems should be equipped with automatic switching on/off.

Heat protection for pipes
When heat distribution or warm water pipes/fittings are installed or replaced in a building, we recommend they should be insulated in order to save energy.

Pump replacement
Detailed information on the subject of “Replacing heating pumps” can be found in the type comparison for heating pumps.

IF modules / building automation for Stratos, Stratos-D, Stratos-Z

Building automation (BA)
Automatically controlled processes have become essential in modern buildings. This applies in particular to all building and technical systems in the fields of:
- Heating systems
- Refrigeration plants
- Air-conditioning systems
- Heat pumps
- Combined heat and power plants
- Water supply
- Sewage disposal, etc.

The BA is responsible for controlling the dependencies between the various sections involved in the technical building equipment (TGA). It is in particular facility management that requires the intersectional exchange of information and data in order to run the building or estates with optimum efficiency and economy. As field devices, pumps are to be seen as components with high power consumption that are indispensable for operations in the TGA. The operational reliability and economic efficiency of pumps and pump systems are ensured by their central availability and monitoring.
Due to technical progress in the fields of electrical engineering/electronics, potential-free contacts and analog unit signals are being successively replaced by bus systems.

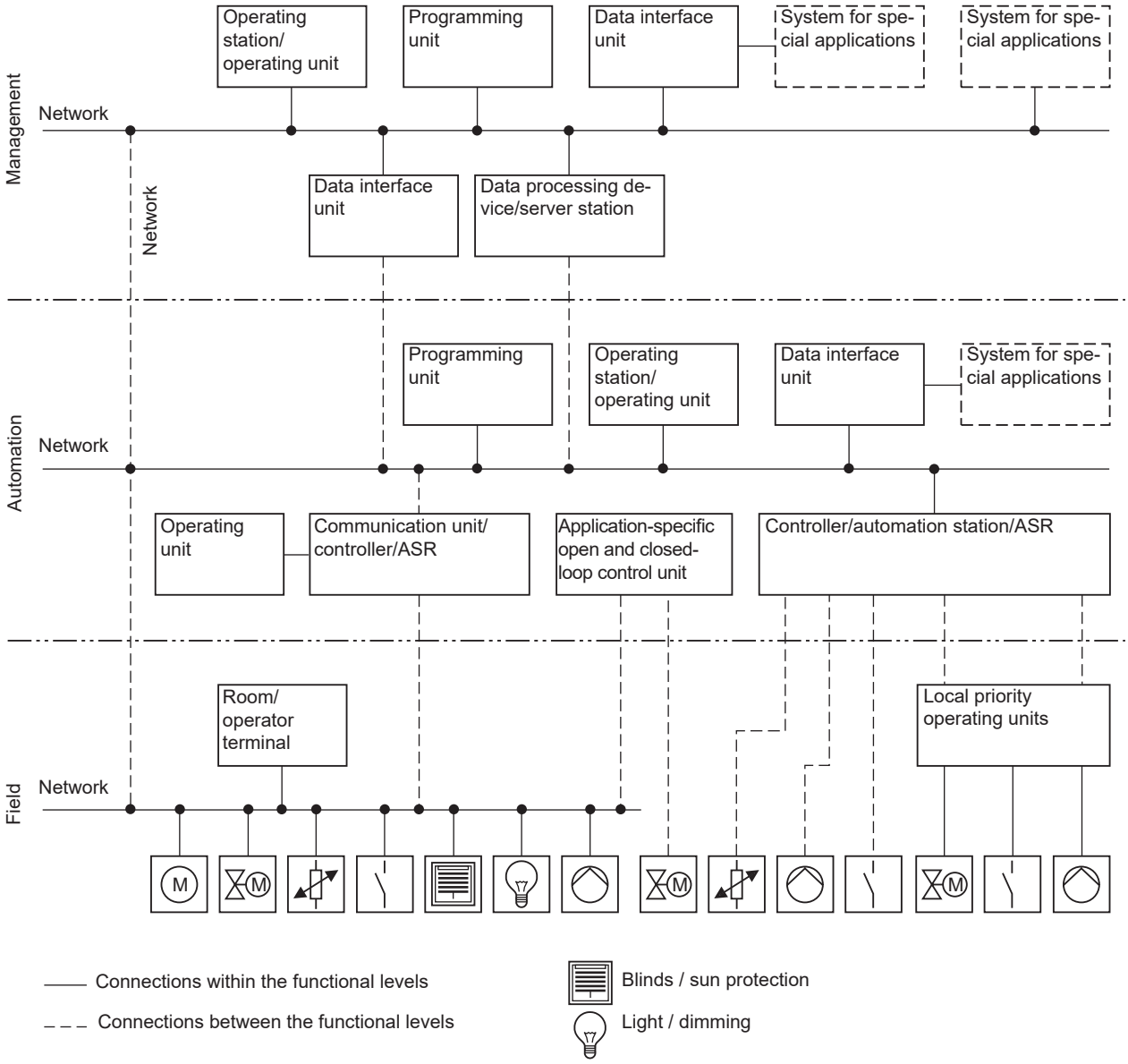

Building automation - diagram

IF modules / building automation for Stratos, Stratos-D, Stratos-Z

Integration into building automation
Depending on the nature and extent of a BA system, different communications connections are required to transfer the signals, control commands and data to the pump system to be monitored.
The design and functions of BA a system are defined precisely in VDI 3814. The scope of communication is decisive for determining whether potential-free contacts or analog signals (2 control cables are required for each piece of information) or bus systems (all data via one bus line) are used for data transmission.
Wilo pumps as well as their optional accessories are equipped with control terminals at which internal relay signals are available in accordance with VDI 3814 requirements.

Operating principle of a collective fault/run signal *:

Opener	Closer	Changeover switch
		
Alarm message acc. to VDI 3814	Operating message acc. to VDI 3814	Option of connection
Representation: deenergised idle status (relay not active)		

Mains voltage	Collective fault signal CFS		Collective operating message COM	
	Relay	Contact	Relay	Contact
Off [1]	0	closed	0	opened
On	0	closed	1	closed
On, pump faulty	1	opened	0	opened

Mains voltage	With control input “Ext. off”	Collective fault signal CFS		Collective operating message COM	
		Relay	Contact	Relay	Contact
Off [1]	closed opened	0 0	closed closed	0 0	opened opened
On	closed opened	0 0	closed closed	1 0	closed opened
On, pump faulty	closed opened	1 1	opened	0 0	opened opened

0 = relay not active (without current)
1 = relay active
SBM = collective run signal
SSM = collective fault signal
[1] Failure of the control electronics is equivalent to the “Mains off” state
* Functional principle according to works setting

It is also possible to implement external control functions such as Overriding Off and Overriding Min. via potential-free contacts provided by the customer.
For this, there are the following combination options:
- Priority Off
  - Stratos/Stratos-Z/Stratos-D with IF modules
  - Stratos GIGA with IF modules
  - CronoLine-IL-E/CronoTwin-DL-E
  - CronoBloc-BL-E with IF modules PLR
  - VeroLine-IP-E/VeroTwin-DP-E
- Priority Min:
  - Stratos/Stratos-Z/Stratos-D with IF modules
  - Stratos GIGA with IF modules
- Priority Off, Priority Max and Priority Min:
  - Stratos/Stratos-Z/Stratos-D with IF modules Stratos PLR
  - Stratos GIGA with IF module PLR
  - VeroLine-IP-E/Vero-Twin-DP-E with IF module PLR
  - CronoLine-IL-E/CronoTwin-DL-E with IF modules PLR
  - CronoBloc-BL-E with IF modules PLR

In addition to these functions, the pumps with communication capabilities feature the option of specifying an extensive number of actual physical values. The latest sensor technology records hydraulic and electrical pump data and provides it via a serial digital interface of the BA. This entire information can be exchanged between a pump with communication capability (accessory modules required) and another BA unit via a 2-wire cable.
Pumps with communication capability are:
- Stratos/Stratos-Z/Stratos-D with IF modules
- Stratos GIGA with IF modules
- CronoLine-IL-E/CronoTwin DL-E with IF modules
- VeroLine-IP-E/VeroTwin-DP-E with IF modules
- CronoBloc-BL-E with IF modules

IF modules / building automation for Stratos, Stratos-D, Stratos-Z

System integration
The demands in terms of communication capabilities and functions are guided through ever more complex hierarchies of building automation as a result of the rising demands for technical building equipment (TGA). This leads to a situation where components at the field level are becoming increasingly technically sophisticated, because - among other things - they also fulfil functional requirements at the automation level. In order to reduce installation costs and thus investment costs of technical building equipment, and thus also those associated with pump systems while at the same time increasing their economic efficiency and reliability, it is necessary to use systems with “open communication” and “distributed intelligence”.

The Wilo-Control automation and control system offers:
- Monitoring and control in accordance with VDI 3814 with
  - Potential-free contacts
  - Analog signals
- Serial bus-capable **Modbus interface slave** for connection to an RS485 BUS system. The protocol meets the “Standard Modbus over Serial Line” V 1.02 of Modbus-IDA. The data items are compatible with the Wilo DigiCon-Modbus.
  - **Communication options with Modbus-RTU bus-capable third-party products**
- The following aspects are to be observed when designing and installing an RS485 bus line:
  - A maximum of 255 consumers can be addressed on one RS485 bus line. In the event of mixed use with third-party products, repeaters might be necessary for more than 32 consumers.
  - A shielded bus cable with 120 Ω characteristic impedance is used for wiring. The required terminating resistors for the line ends are already integrated in the IF module and can be activated as required. This shield is to be applied carefully to both sides in order to avoid communication disruptions on the bus. This is done at the pumps with EMC screwed connections which are enclosed with the IF module. Clamps that enclose the braided shield are to be used in the switch cabinet.
  - Pure line structure is required as BUS topology.
- Repeaters can be used to extend the bus length. The maximum possible length is 1000 metres. However, the length depends on the cable type and the transmission speed used as well as external interference.

- Serial bus-capable **BACnet MS/TP interface** slave for connection to an RS485 BUS system. The protocol meets the ISO 16484-5 standard (BACnet MS/TP).
  - Communication options with BACnet MS/TP-capable third-party products and via router with BACnet/IP and BACnet Ethernet
- The following aspects are to be observed when designing and installing an RS485 bus line:
  - A maximum of 255 consumers can be addressed on one RS485 bus line. In the event of mixed use with third-party products, repeaters might be necessary for more than 32 consumers.
  - A shielded bus cable with 120 ohm characteristic impedance is used for wiring. The required terminating resistors for the line ends are already integrated in the IF module and can be activated as required. This shield is to be applied carefully to both sides in order to avoid communication disruptions on the bus. This is done at the pumps with EMC screwed connections which are enclosed with the IF module. Clamps that enclose the braided shield are to be used in the switch cabinet.
  - Pure line structure is required as BUS topology.
- Repeaters can be used to extend the bus length. The maximum possible length is 1000 metres. However, the length depends on the cable type and the transmission speed used as well as external interference.

Notes

Interfaces to TopTronic® E
Ext. Off/SBM interface
Ext. Off interface (0-10 V)
SBM interface (0-10 V)
Ext. Min interface (0-10 V)

Interfaces for control technology
Modbus RTU interface
LON interface
CANopen interface
BACnet MS/TP interface
PLR interface

Double pump management (Modbus, BACnet, CANopen)
DP interface

IF modules / building automation for Stratos, Stratos-D, Stratos-Z

- Serial bus-capable **CANopen interface** as new Wilo standard for connection to a CAN BUS system. The protocol meets the CANopen standard (EN 50325-4). Compared to the data items of the LONTalk protocol, the CAN protocol uses newly defined data items, such as e.g.
  - Times for pump kick, pump cycling, fault shutdown delay
  - Adjustment of the SSM/SBM performance, pump management for up to 127 pumps
  - Histogram (statistics), and much more: The complete list of parameters can be downloaded from the Wilo website: http://www.wilo.de/automation
- The data items of these two bus protocols are nevertheless comparable at the functional level (selection of control mode, setpoint specification, etc.). With its high transmission speed (125 kBit/s) however, CAN does offer a few advantages compared to the LON field bus system:
  - Integration into any CAN BUS system, since the protocol complies with the CANopen standard (EN 50325-4).
  - Communication options with CAN bus-capable third-party products
  - Communication options with Wilo I/O modules and Wilo gateways; due to the line structure of the CAN BUS system, the amount of cable required is reduced to a minimum.

- The following aspects are to be observed when designing and installing a CAN bus line:
  - A maximum of 127 consumers can be connected to and addressed on a CAN bus line.
  - With 64 pumps and 32 I/O modules, simplified addressing and connection options are possible.
  - When there are more than 64 pumps on a CAN bus line, the pumps must be configured with a commercially available CANopen configuration program.
  - A special shielded CAN bus cable is used for wiring. This shield is to be applied carefully to both sides in order to avoid communication disruptions on the bus. This is done at the pumps with EMC screwed connections which are enclosed with the IF module Stratos CANopen. Clamps that enclose the braided shield are to be used in the switch cabinet.
- Nodes may be structural elements and components
- (including ones from third-party sources) such as:
  - Single pumps, double pumps, pump systems with CAN interface
  - Pressure sensors, differential pressure sensors, temperature sensors
  - External controllers
  - Routers, repeaters, gateways
  - I/O modules
- The bus must be sealed off at the last node of the bus line with appropriate resistances. The Stratos CANopen IF module with two DIP switches is possible with the pumps.
- The use of CAN bridges with interface in accordance with ISO11898-2 is recommended for extending the bus length. The use of repeaters is not recommended.
- Serial bus-capable **LON interface** with LONTalk protocol and FTT10A transceiver type for connecting electronically controlled LON-capable Wilo pumps with infrared interfaces to LONWorks networks. The LONWorks technology offers installation advantages such as:
  - Twisting protection
  - Resistance to interference
  - Small cross-sections (0.75 mm^2)
  - EMC protection at both ends
  - Galvanically isolated
  - Interference voltage resistance up to 250 VAC
  - Freely selectable topology.

LON is an open, non-manufacturer-specific system which enables open, intersectional communication between different components and systems of the technical building equipment. It thus offers advantages to consultants, installers and operators, such as:
- Intersectional integration
- Is non-manufacturer-specific
- Creation of functional added value
- Avoidance of installation and dimensioning errors due to standardised data interface (prerequisite: no varying transmission media)
- Reduction of installation expenses compared to stand-alone systems
- Reduction of investment costs due to multiple use of sensors
- No expensive gateway solutions are required for data exchange between stand-alone systems
- Flexibility in the event of modifications and subsequent installations
- Reduced operating costs due to intelligent energy management
- Efficiency and operational reliability due to hydraulic load management in heating/ventilation/air-conditioning systems
- Overall building transparency due to centralised displays, interventions and monitoring
- Standardised and transparent operation of equipment and technical systems

Notice:
The CANopen interface is not compatible with the Hoval CAN bus.

IF modules / building automation for Stratos, Stratos-D, Stratos-Z

- LONWorks enables 2 directions of communication:
  - Vertical communication between components at the field level and automation stations at the automation level
  - Horizontal communication between components at the field level.

Horizontal communication in particular allows decentralised structures to be established, which operate without a higher-level automation station. It has thus become possible to implement previously expensive control tasks with significantly lower installation expenses, e.g. a controlled pump with communication capability can exchange data directly via LON with a valve, a differential-pressure sensor or a boiler control system and conduct control tasks. At the same time, the pump is able to send electrical and hydraulic operating data for statistical evaluation and, if necessary, any fault and run signals to the higher-level primary control unit or receive overriding commands from this primary control unit. Communication takes place according to the standardised LONTalk protocol and uses the defined network variables of the LONMark functional profile: “Pump Controller Object for HVAC Applications” (8120_10.pdf).

- Serial digital **PLR interface** (Wilo-specific hardware and protocol) of pumps with communication capability is connected in a star shape via a 2-wire cable to a Wilo interface converter or a company-specific coupling module (I/O module). This connection permits transmission lines of up to 1000 m. Additional advantages are:
  - Twisting protection
  - Resistance to interference
  - Small cross-sections (0.75 mm^2)
  - EMC protection at both ends
  - Galvanically isolated
  - Interference voltage resistance up to 250 VAC

- Serial bus-capable **RS 485 interface** (standard hardware, Wilo-specific protocol) with digital interface converter for communication with digital monitoring units. The data protocol is to be coordinated with the respective BA manufacturer.

Operating data management by BA
Operating data management by the BA system allows the recording and storage of cyclic and event-specific data, e.g.:
- Maximum output data for Δp and Q
- Minimum output data for Δp and Q
- Current power consumption P_1
- Operating hours
- Cumulative energy consumption
- Status messages
- Fault signals with specification of date, time and cause.

The multitude of listed information and functions enables specific energy and maintenance management and thus contributes to reducing costs. Overall efficiency values and performance figures can thus be determined, e.g. by performance and work values in relation to the heating load to be measured.

IF modules / building automation for Stratos, Stratos-D, Stratos-Z

Interfaces to TopTronic® E

Technical data				
Model	**IF module Stratos Ext. Off/SBM**	**IF module Stratos Ext. Off**	**IF module Stratos SBM**	**IF module Stratos Ext. Min**
Terminal cross-section *mm²*	1.5	1.5	1.5	1.5
Cable length	100 m	100 m	100 m	100 m
Bus cable	Shielded cable	Shielded cable	-	Shielded cable
Contact input, no-load voltage	max. 10 V	max. 10 V	-	max. 10 V
Contact input, loop current	10 mA	10 mA	-	10 mA
Contact output load capacity	30 V AC / 60 V DC: 1A AC1/DC1	-	30 V AC / 60 V DC: 1A AC1/DC1	-
Contact output, min. load	12 V DC, 10 mA	-	12 V DC, 10 mA	-
Dielectric strength	250V AC	250V AC	-	250V AC
Control input 0-10 V				
Cable length	-	25 m	25 m	25 m
Cable type	-	Control cable: shielded cable	Control cable: shielded cable	Control cable: shielded cable
Dielectric strengthening	-	24 V =	24 V =	24 V =
Input resistance of voltage input	-	> 100 kohm	> 100 kohm	> 100 kohm
Accuracy	-	± 5 %	± 5 %	± 5 %

Interfaces for control technology

Technical data					
Model	**IF module Stratos Modbus**	**IF module Stratos LON**	**IF module Stratos CANopen**	**IF module Stratos BACnet**	**IF module Stratos PLR**
Cable type	Bus cable, twisted in pairs, shielded, 1 x 2 x 0.5 mm² / 120 Ω characteristic impedance (line type B in accordance with TIA 485-A)	twisted pair, shielded	CAN bus cable, twisted in pairs, shielded, 1 x 2 x 0.5 mm² / 120 Ω characteristic impedance (line type B in accordance with TIA 485-A)	Bus cable, twisted in pairs, shielded, 1 x 2 x 0.5 mm² / 120 Ω characteristic impedance (line type B in accordance with TIA 485-A)	twisted pair, shielded
Cable length	1000 m	1000 m (bus topology with max. 3 m spur line); 500 m (free topology, max. 400 m between communicating consumers	200 m	1000 m	1000 m
Spur line	not permissible	-	max. 10 m, total max. 50 m	not permissible	-
Terminal cross-section *mm²*	1.5	1.5	1.5	1.5	1.5
Interface	RS485 (TIA-485A), optically isolated	FTT 10A	CAN acc. to ISO 11898-2, optically isolated	RS485 (TIA-485A), optically isolated	Wilo-specific
Velocity	2400, 9600,19200, 38400, 115200 kbit/s	78 kbit/s, fixed	125 kbit/s, fixed	9600,19200, 38400, 76800 kbit/s	-
Format	8 data bits, no/even/odd parity, 1 stop bit (2 only without parity)	-	-	-	-
Protocol	Modbus RTU	LonMark Layers 1-6 Interoperability Guidelines 3.2; LonMark Application Layer Interoperability Guidelines 3.2	CANopen acc. to CiA DS301 V 4.02	BACnet MS/TP Version 1 Revision 4	PLR
Profile	compatible with Wilo DigiCon-Modbus	LonMark pump controller 8210_10	-	BACnet Smart Sensor, Smart Actor (B-SS, B-SA)	-

IF modules / building automation for Stratos, Stratos-D, Stratos-Z

Double pump management (Modbus, BACnet, CANopen)

Technical data	
Model	**IF module Stratos DP**
Cable type	2 x 2-wire, twisted in pairs, shielded (scope of delivery: 2 x 0.24 mm² + 2 x 0.4 mm²)
Cable length	3 m (scope of delivery: 700 mm)
Spur line	-
Terminal cross-section *mm²*	1.5
Interface	Wilo-specific, sustained short circuit protection, twist-proof
Velocity	-
Format	-
Protocol	-
Profile	-

IF modules / building automation for Stratos, Stratos-D, Stratos-Z

Function table Stratos/Stratos-Z/Stratos-D	
Manual function	
Pump on/off	•
Control mode setting (Δp-c, Δp-v, Δp-T*), controller)	•
Differential pressure setpoint setting	•
Speed setting (manual control mode)	•
Automatic function	
Infinitely variable performance control Δp-c	•
Infinitely variable performance control Δp-v	•
Infinitely variable performance control Δp-T	•
Automatic setback during low-load periods (e.g. at night)	•
Full motor protection with fault trip	•
External control function	
Control input Priority Off	IF module Stratos Ext. Off IF module Stratos Ext. Off/SBM
Control input Priority Min	IF module Stratos Ext. Min
Control input 0-10 V (remote speed adjustment)	IF module Stratos Ext. Off IF module Stratos Ext. Min IF module Stratos SBM
Control input 0-10 V (remote setpoint adjustment)	IF module Stratos Ext. Off IF module Stratos Ext. Min IF module Stratos SBM
Signal and display function	
Collective fault signal (potential-free NC contact) Function, see Wilo-Control	•
Run signal (potential-free NO contact) Function, see Wilo-Control	IF module Stratos SBM IF module Stratos Ext. Off/SBM
Fault signal light	•
IR communication run signal light	•
Error code	•
LCD screen for display of pump data	•
Data exchange	
Infrared interface for wireless data exchange with the operating and service unit, IR-Module/IR-Stick/IR-Monitor	Functions, see function table, IR-Module/IR-Stick/IR Monitor
Serial digital Modbus interface for connection to an RS485 BUS system	IF module Stratos Modbus
Serial digital BACnet MS/TP interface for connection to an RS485 BUS system	IF module BACnet status
Serial digital CANopen interface for connection to a CAN BUS system	IF module Stratos CANopen
Serial digital LON interface for connection to a LONWorks network	IF module Stratos LON
Serial digital PLR interface for connection to BA via Wilo interface converter or company-specific coupling modules	IF module Stratos PLR
Dual pump management (2 x single or 1x double pump)	
Main/standby mode (automatic. fault-actuated switchover/time-dependent pump cycling)	Various combinations with Stratos IF modules possible
Parallel operation (efficiency-optimised peak-load activation and deactivation)	•1)2)

• = available, - = not available
*) programmable via IR-Stick, IR-Monitor, LON or CANopen
1) Various combinations with Stratos IF modules possible
2) Dual pump management with 2 single pumps is only possible if the equivalent double pump is also listed in the catalog

Dual pump management that can be integrated for 1 x Stratos-D or 2 x Stratos/Stratos-Z

Functions of the dual pump management system that can be integrated:
- Main/standby mode
- Parallel operation (efficiency-optimised peak-load activation and deactivation)
- Base-load pump cycling after 24 hours of cumulative operating time
- Automatic fault-actuated switchover

IF modules / building automation for Stratos, Stratos-D, Stratos-Z

Combination options of the Stratos IF modules for integrated dual pump management[1)]

	IF module Stratos Modbus	IF module Stratos BACnet	IF module Stratos CANopen	IF module Stratos LON	IF module Stratos PLR	IF module Stratos DP	IF module Stratos Ext. Off	IF module Stratos Ext. Min	IF module Stratos SBM	IF module Stratos Ext. Off/SBM
Serial digital Modbus interface for connection to an RS485 BUS system	1 x MA	-	-	-	-	1 x SL	-	-	-	-
Serial digital BACnet MS/TP interface for connection to an RS485 BUS system	-	1 x MA	-	-	-	1 x SL	-	-	-	-
Serial digital CANopen interface for connection to a CAN BUS system	-	-	1 x MA	-	-	1 x SL	-	-	-	-
Serial digital LON interface for connection to a LONWORKS network	-	-	-	1 x MA	1 x SL	-	-	-	-	-
Serial digital PLR interface for connection to BA via Wilo interface converter or company-specific coupling modules	-	-	-	-	1 x MA 1 x SL	-	-	-	-	-
Input for potential-free NC contact with the **Ext. Off** function [3)] **0 - 10 V control input** for remote speed adjustment or remote setpoint adjustment [4)]	-	-	-	-	1 x SL	-	1 x MA	-	-	-
Input for potential-free NC contact with the **Ext. Min** function [5)] **0 - 10 V control input** for remote speed adjustment or remote setpoint adjustment [4)]	-	-	-	-	1 x SL	-	-	1 x MA	-	-
SBM run signal as potential-free NO contact [6)] **0 - 10 V control input** for remote speed adjustment or remote setpoint adjustment [4)]	-	-	-	-	-	-	-	-	1 x MA 1 xSL	-
Input for potential-free NC contact with **Ext. Off** function [3)] and **SBM run signal** as potential-free NO contact [6)]	-	-	-	-	-	-	-	-	-	1 x MA 1 xSL
SSM fault signal as potential-free NC contact integrated in the pump [7)]	-	-	-	-	-	-	-	-	-	-

MA = Master, SL = Slave

1) All Stratos IF modules can be combined as desired for integrated dual pump management.
The table shows the most economic combinations without the omission of any functional properties.
2) The control function is applied to the MA of the double pump; it is effective for the entire double pump.
The SL of the double pump receives the relevant command from the MA via the DP interface of the IF modules (2-wire connection cable).
The control functions (inputs) on the SL are not active.
The PLR interface on the SL is not active.
The IR interface on the SL is not active.
The signal outputs (SSM, SBM) on the SL are active.
3) Both drives are stationary.
4) The 0 - 10 V control input has various additional functions, see “Function of the analog input, 0 - 10 V, in the integrated dual pump management” table and “High-efficiency pumps consulting guide”
5) The base-load pump runs at minimum speed, the other drive is stationary.
6) The run signal indicates the rotation of the respective drive (separate individual run signals for MA and SL).
7) The SSM on the MA can be set as individual fault signal (for the MA) or collective fault signal (for MA and SL) with the IR-Module/IR-Stick/IR-Monitor.

Function of the 0-10 V analog input in the integrated dual pump management system

Function 0-10 V	Double pump operating mode	
	Main/standby mode H / H	Parallel operation H + H
Remote speed adjustment (DDC) **0 - 2 V: Off** [1)] **2 - 3 V: Min speed** [1)] **3 - 10 V: n_{min}…n_{max}**	Speed of base-load pump follows the voltage signal Base-load pump cycling after 24 operating hours	Both pumps follow the voltage signal at the same speed
Remote setpoint adjustment **0 - 2 V: Off** [1)] **2 - 3 V: H_{min}** [1)] **3 - 10 V: H_{min}…H_{max}**	Base-load pump controls the differential pressure Base-load pump cycling after 24 operating hours	Efficiency-optimised peak-load activation and deactivation Base-load pump cycling after 24 operating hours

1) Observe On/Off switching hysteresis, see “High-efficiency pumps consulting guide”

IF modules / interfaces to TopTronic® E
Stratos, Stratos-D, Stratos-Z

IF modules for single pumps and double pumps

	IF module Stratos Ext. Off/SBM	2 x IF module Stratos Ext. Off/SBM
Product photo		
		
Terminal diagram	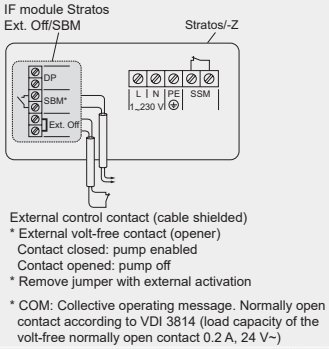	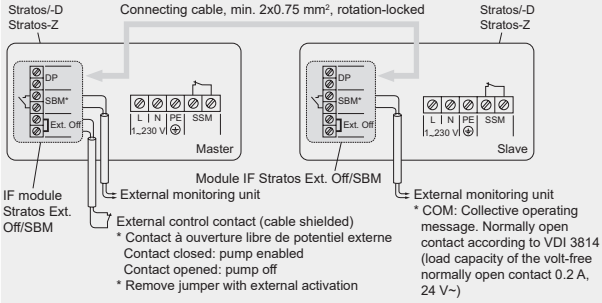
Description	**Additional functions** • Input for potential-free NC contact with **Ext. Off function** - Contact closed: pump operates under auto control - Contact opened: pump stopped • Collective operating message SBM as potential-free NO contact - Contact closed: pump operates in the specified operating mode - Contact opened: pump stopped **Double pump DP interface** (see details alongside) **Scope of delivery** - IF module Ext. Off/SBM - EMC union connection Pg 9 **Delivery condition** The terminals of the Ext. Off control input are bridged.	Functions as described at left, plus: **Double pump DP interface** for the optional integration of a dual pump management system of 1 x double pump or 2 x single pumps, optionally with the following functions: • Main/standby operation for automatic fault-actuated • switchover to the standby pump and automatic pump • alteration after 24 hrs running time • Parallel operation for efficiency-optimised activation • and deactivation of the peak-load pump and automatic fault-actuated switchover to the standby pump A connecting cable is to be provided by the customer: min. 2 x 0.75 mm² The SBM contact acts as an individual run signal for each pump.

IF modules / interfaces to TopTronic® E
Stratos, Stratos-D, Stratos-Z

IF modules for single pumps and double pumps

	IF module Stratos Ext. Off	**IF module Stratos Ext. Off (master pump)** **IF module Stratos PLR (slave pump)**
Product photo		
		
Terminal diagram	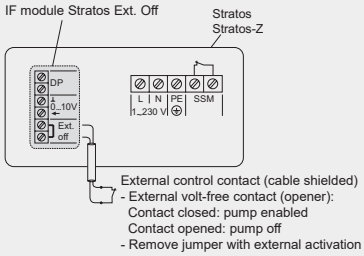	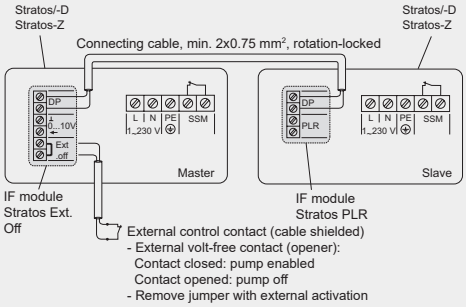
Description	**Additional functions** • Input for potential-free NC contact with **Ext. Off function** - Contact closed: pump operates under auto control - Contact opened: pump stopped • **Control input 0-10 V** for remote setpoint adjustment or remote speed adjustment (shielded cable) - Remote setpoint adjustment: The setpoint for the integrated differential pressure control is pre-set for the pump via an analog signal 0-10 V (see “High-efficiency pumps consulting guide”). - Remote speed adjustment: An external controller provides an actuating signal for remote speed adjustment (DDC operation) (see “High-efficiency pumps consulting guide”). The desired function must be activated at the pump. **Double pump DP interface** (see details alongside) **Scope of delivery** - IF module Stratos Ext. Off - EMC union connection Pg 9 **Delivery condition** The terminals of the Ext. Off control input are bridged.	Functions as described at left, plus: **Double pump DP interface** for the optional integration of a dual pump management system of 1 x double pump or 2 x single pumps, optionally with the following functions: • Main/standby operation for automatic fault-actuated switchover to the standby pump and automatic pump alteration after 24 hrs running time • Parallel operation for efficiency-optimised activation and deactivation of the peak-load pump and automatic fault-actuated switchover to the standby pump (in the scope of delivery of the Stratos IF module PLR: 2-core connecting cable, 670 mm long; longer connecting cables must be provided by the customer: min. 2 x 0.75 mm²) The functions Ext. Off and the control input 0 – 10 V act on both pumps.

IF modules / interfaces to TopTronic® E
Stratos, Stratos-D, Stratos-Z

IF modules for single pumps and double pumps

	IF module Stratos SBM	2 x IF module Stratos SBM
Product photo		
		
Terminal diagram	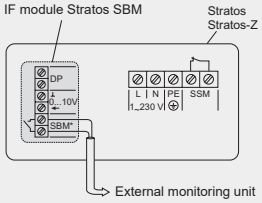 * COM: Collective operating message. Normally open contact according to VDI 3814 (load capacity of the volt-free normally open contact 0.2 A, 24 V~) Function see Wilo-Control	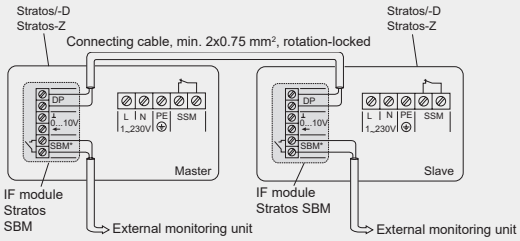 * COM: Collective operating message. Normally open contact according to VDI 3814 (load capacity of the volt-free normally open contact 0.2 A, 24 V~) Function see EBM-Control
Description	**Additional functions** • Collective operating message **SBM** as potential-free NO contact - Contact closed: pump operates in the specified operating mode - Contact opened: pump stopped • **Control input 0-10 V** for remote setpoint adjustment or remote speed adjustment (shielded cable) - Remote setpoint adjustment: The setpoint for the integrated differential pressure control is pre-set for the pump via an analog signal 0-10 V (see “High-efficiency pumps consulting guide”). - Remote speed adjustment: An external controller provides an actuating signal for remote speed adjustment (DDC operation) (see “High-efficiency pumps consulting guide”). - The desired function must be activated at the pump. **Double pump DP interface** (see details alongside) **Scope of delivery** - IF module Stratos SBM - EMC union connection Pg 7 - EMC union connection Pg 9	Functions as described at left, plus: **Double pump DP interface** for the optional integration of a dual pump management system of 1 x double pump or 2 x single pumps, optionally with the following functions: • Main/standby operation for automatic fault-actuated switchover to the standby pump and automatic pump alteration after 24 hrs running time • Parallel operation for efficiency-optimised activation and deactivation of the peak-load pump and automatic fault-actuated switchover to the standby pump A connecting cable is to be provided by the customer: min. 2 x 0.75 mm² The control input 0 – 10 V acts on both pumps. The SBM contact functions as an individual run signal for each pump.

IF modules / interfaces to TopTronic® E
Stratos, Stratos-D, Stratos-Z

IF modules for single pumps and double pumps

	IF module Stratos Ext. Min	IF module Stratos 1 x Ext. Min (master pump) IF module Stratos PLR (slave pump)
Product photo		
		
Terminal diagram	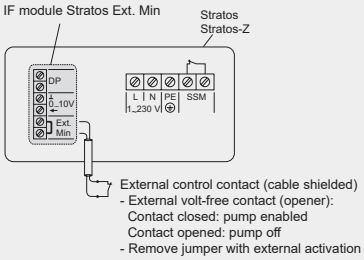	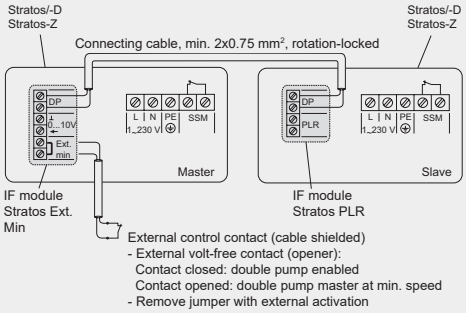
Description	**Additional functions** • Input for potential-free NC contact with **Ext. Min function** (setback operation without Autopilot) - Contact closed: pump operates under auto control - Contact opened: pump running at fixed min. speed • **Control input 0 - 10 V** for remote setpoint adjustment or remote speed adjustment (shielded cable) - Remote setpoint adjustment: The setpoint for the integrated differential pressure control is pre-set for the pump via an analog signal 0-10 V (see “High-efficiency pumps consulting guide”). - Remote speed adjustment: An external controller provides an actuating signal for remote speed adjustment (DDC operation) (see “High-efficiency pumps consulting guide”). - The desired function must be activated at the pump. **Double pump DP interface** (see details alongside) **Scope of delivery** - IF module Stratos Ext. Min - EMC union connection Pg 9 **Delivery condition** The terminals of the Ext. Min control input are bridged.	Functions as described at left, plus: **Double pump DP interface** for the optional integration of a dual pump management system of 1 x double pump or 2 x single pumps, optionally with the following functions: • Main/standby operation for automatic fault-actuated switchover to the standby pump and automatic pump alteration after 24 hrs running time • Parallel operation for efficiency-optimised activation and deactivation of the peak-load pump and automatic fault-actuated switchover to the standby pump (in the scope of delivery of the Stratos IF module PLR: 2-core connecting cable, 670 mm long; longer connecting cables must be provided by the customer: min. 2 x 0.75 mm²) The functions Ext. Min and the control input 0 – 10 V act on both pumps.

IF modules / interfaces to I&C technology
Stratos, Stratos-D, Stratos-Z

IF modules for single pumps and double pumps

	IF module Stratos Modbus	IF module Stratos Modbus (master pump) IF module Stratos DP (slave pump)
Product photo		
		
Terminal diagram	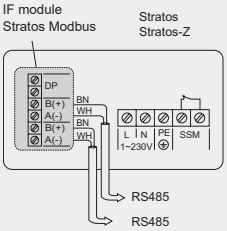	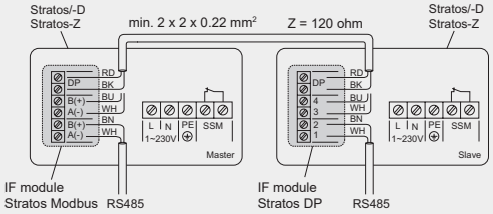
Description	**Additional functions** Serial digital **Modbus RTU interface** for connection to building automation BA via RS485. • Transfer of the following data items as control commands to the pump: - Type of regulation - Delivery head/speed setpoint - Pump on/off - Lowering operation • Transfer of the following data items as messages from the pump: - Actual value delivery head - Actual value volume flow - Actual value consumption - Actual value output - Actual value motor current - Operating hours - Actual value speed of rotation - Detailed error messages - Status messages **Double pump DP interface** (see details alongside) **Documentation for download** • Modbus specification for IF module http://www.wilo.de/automation **Scope of delivery** - IF module Stratos Modbus - EMC union connection Pg 7 and Pg 9 - Sticker for BUS address	Functions as described at left, plus: **Double pump DP interface** for the optional integration of a dual pump management system of 1 x double pump or 2 x single pumps, optionally with the following functions: • Main/standby operation for automatic fault-actuated • switchover to the standby pump and automatic pump • alteration after 24 hrs running time • Parallel operation for efficiency-optimised activation and deactivation of the peak-load pump and automatic fault-actuated switchover to the standby pump (in the scope of delivery of the Stratos DP IF module PLR: EMC union connection and 2-core connecting cable, 0.7 m long, a longer connecting cable must be provided by the customer: min. 2 x2 x 0.25 mm², shielded pair)

IF modules / interfaces to I&C technology
Stratos, Stratos-D, Stratos-Z

IF modules for single pumps and double pumps

	IF module Stratos LON	IF module Stratos LON (master pump) IF module Stratos PLR (slave pump)
Product photo		
		
Terminal diagram	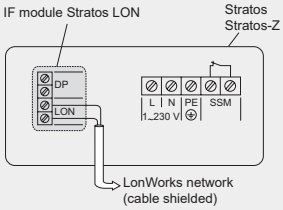	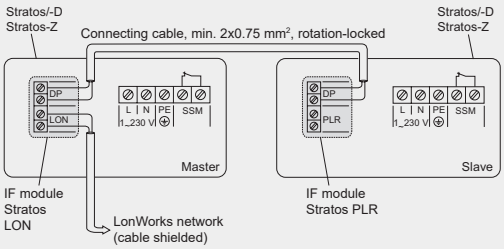
Description	**Additional functions** Serial digital **LON interface** for connection to a LONWORKS networks. • Transfer of the following data items as control commands to the pump: - Type of regulation - Delivery head/speed setpoint - Pump on/off - Lowering operation - Data external sensors • Transfer of the following data items as messages from the pump: - Actual value delivery head - Actual value volume flow - Actual value consumption - Actual value output - Actual value motor current - Operating hours - Actual value speed of rotation - Detailed error messages - Status messages **Double pump DP interface** (see details alongside) **Documentation for download** • LON support files: - Download Application over Network: *.NXE /*.APB - External Interface Files: *.XIF /*.XFB - Device Resource Files: *.ENU /*.FMT /*.FPT /*.TYP http://www.wilo.de/automation **Scope of delivery** - IF module Stratos LON - EMC union connection Pg 7 and Pg 9 - Sticker with neuron ID for pulling off - **Delivery condition** The LON IF module is supplied as “Application unconfigured” in accordance with the LONMark Application Layer Interoperability Guidelines.	Functions as described at left, plus: **Double pump DP interface** for the optional integration of a dual pump management system of 1 x double pump or 2 x single pumps, optionally with the following functions: • Main/standby operation for automatic fault-actuated switchover to the standby pump and automatic pump alteration after 24 hrs running time • Parallel operation for efficiency-optimised activation and deactivation of the peak-load pump and automatic fault-actuated switchover to the standby pump (in the scope of delivery of the Stratos IF module PLR: 2-core connecting cable, 670 mm long; longer connecting cables must be provided by the customer: min. 2 x 0.75 mm²) In the LONWorks network, data items are transmitted for the double pump as a complete unit; there is no differentiation between master and slave.

IF modules / interfaces to I&C technology
Stratos, Stratos-D, Stratos-Z

IF modules for single pumps and double pumps

	IF module Stratos CANopen	IF module Stratos CANopen (master pump) IF module Stratos DP (slave pump)
Product photo		
		
Terminal diagram	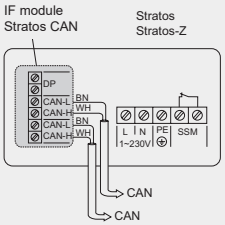	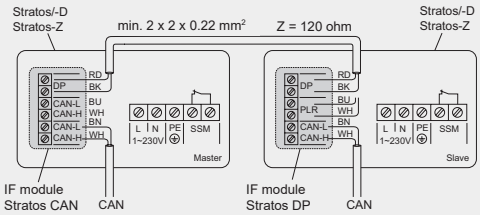
Description	**Additional functions** Serial digital **CANopen interface** for connection to a CAN BUS system. • Transfer of the following data items as control commands to the pump: - Type of regulation - Delivery head/speed setpoint - Pump on/off - Lowering operation • Transfer of the following data items as messages from the pump: - Actual value delivery head - Actual value volume flow - Actual value consumption - Actual value output - Actual value motor current - Operating hours - Actual value speed of rotation - Detailed error messages - Status messages **Double pump DP interface** (see details alongside) **Documentation for download** - **CANopen** specification for IF module - **CANopen** .eds file http://www.wilo.de/automation **Scope of delivery** - IF module Stratos CANopen - EMC union connection Pg 7 and Pg 9 - Sticker for BUS address	Functions as described at left, plus: **Double pump DP interface** for the optional integration of a dual pump management system of 1 x double pump or 2 x single pumps, optionally with the following functions: • Main/standby operation for automatic fault-actuated switchover to the standby pump and automatic pump alteration after 24 hrs running time • Parallel operation for efficiency-optimised activation and deactivation of the peak-load pump and automatic fault-actuated switchover to the standby pump (in the scope of delivery of the Stratos DP IF module PLR: EMC union connection and 2-core connecting cable, 0.7 m long, a longer connecting cable must be provided by the customer: min. 2 x 2 x 0.25 mm², shielded pair)

IF modules / interfaces to I&C technology
Stratos, Stratos-D, Stratos-Z

IF modules for single pumps and double pumps

	IF module Stratos BACnet	**IF module BACnet (master pump)** **IF module Stratos DP (slave pump)**
Product photo		
		
Terminal diagram	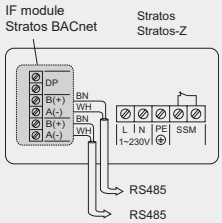	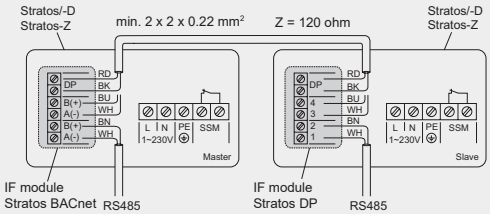
Description	**Additional functions** Serial digital **BACnet MS/TP interface** for connection to building automation BA via RS485. • Transfer of the following data items as control commands to the pump: - Type of regulation - Delivery head/speed setpoint - Pump on/off - Lowering operation • Transfer of the following data items as messages from the pump: - Actual value delivery head - Actual value volume flow - Actual value consumption - Actual value output - Actual value motor current - Operating hours - Actual value speed of rotation - Detailed error messages - Status messages **Double pump DP interface** (see details alongside) **Documentation for download** BACnet PICS and data point list http://www.wilo.de/automation **Scope of delivery** - IF module Stratos BACnet - EMC union connection Pg 7 and Pg 9 - Sticker for BUS address	Functions as described at left, plus: **Double pump DP interface** for the optional integration of a dual pump management system of 1 x double pump or 2 x single pumps, optionally with the following functions: • Main/standby operation for automatic fault-actuated switchover to the standby pump and automatic pump alteration after 24 hrs running time • Parallel operation for efficiency-optimised activation and deactivation of the peak-load pump and automatic fault-actuated switchover to the standby pump (in the scope of delivery of the Stratos DP IF module PLR: EMC union connection and 2-core connecting cable, 0.7 m long, a longer connecting cable must be provided by the customer: min. 2 x 2 x 0.25 mm², shielded pair)

IF modules / interfaces to I&C technology
Stratos, Stratos-D, Stratos-Z

IF modules for single pumps and double pumps

	IF module Stratos PLR	2 x IF module Stratos PLR
Product photo		
		
Terminal diagram	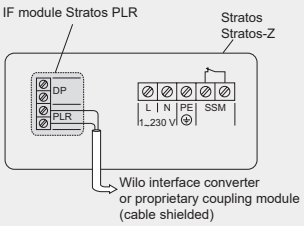	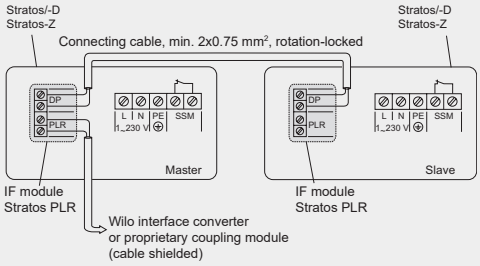
Description	**Additional functions** Serial digital **PLR interface** for connection to building automation BA via: • Wilo interface converter or • Proprietary coupling modules • Transfer of the following data items as control commands to the pump: - Type of regulation - Delivery head/speed setpoint - Pump on/off - Lowering operation • Transfer of the following data items as messages from the pump: - Actual value delivery head - Actual value volume flow - Actual value consumption - Actual value output - Actual value motor current - Operating hours - Actual value speed of rotation - Detailed error messages - Status messages **Double pump DP interface** (see details alongside) **Documentation for download** - LON support files: - PLR specification for Wilo-DigiCon - http://www.wilo.de/automation **Scope of delivery** - IF module Stratos PLR - Connecting line 670 mm - EMC union connection Pg 7 and Pg 9	Functions as described at left, plus: **Double pump DP interface** for the optional integration of a dual pump management system of 1 x double pump or 2 x single pumps, optionally with the following functions: • Main/standby operation for automatic fault-actuated switchover to the standby pump and automatic pump alteration after 24 hrs running time • Parallel operation for efficiency-optimised activation and deactivation of the peak-load pump and automatic fault-actuated switchover to the standby pump (in the scope of delivery of the Stratos IF module PLR: 2-core connecting cable, 670 mm long; longer connecting cables must be provided by the customer: min. 2 x 0.75 mm²)

■ **Dimensioning aid**

Source: Energie Schweiz: www.Leistungsgarantie.ch

1 GENERAL INFORMATION

Small and medium-sized installations designed for utilities management use wet-running circulation pumps almost without exception. The Energy Efficiency Index, or EEI for short, is a tool for determining how efficiently these pumps operate: the lower the EEI value, the more efficient the pump.
Since 2013, the Swiss Energy Ordinance has dictated that wet-running circulation pumps with a hydraulic output of up to 2500 watts may only be placed on the market if they have an EEI value of ≤ 0.27 (with the exception of special solar and heat source pumps, as well as drinking water circulation pumps). From 1st August 2015, this EEI requirement is being given a more stringent revision to a value of ≤ 0.23, and the energy labels that circulation pumps have been using are being withdrawn. There was a time when even pumps that were moderately energy-efficient were able to achieve a class A rating. In the case of high-output circulation pumps (i.e. those with an electrical output of around 800 watts and up), the dry-running variety also needs to be considered.
EEI values below 0.27 can only be achieved by using high-efficiency pumps with permanent magnet motors or EC (electronically commutated) motors; these are as much as three times more efficient than conventional pumps that use asynchronous motors. They are electronically speed-controlled and automatically adapt the output in line with fluctuations in the flow rate. The right characteristic for the system has to be set, however, and the pump must not be heavily overdimensioned as this will have a negative effect on its efficiency range. The per-thousand rule, illustrated in Section 6, is an easy way of checking whether a pump within a heating zone is correctly dimensioned.
To find a selection of highly efficient circulating pumps, visit www.topten.ch.

2 ROUGH DIMENSIONING FOR EXISTING SYSTEMS

The most important parameters for dimensioning a circulating pump are the flow rate $\dot{V}$ and the pump head H, both of which can be calculated roughly using simple methods.

2.1 CALCULATING THE FLOW RATE

The required maximum heat output (standard heat load Φ_{HL}) can be calculated on the basis of the annual energy consumption of a heating system (fuel; district heating). Below is a method for carrying out a rough calculation of the standard heat load; the "Ermittlung der Wärmeerzeugerleistung" ("Calculating heat generator output") document, part of the "Leistungsgarantie Haustechnik" ("Building services performance guarantee") service provided by Switzerland's SwissEnergy programme, is a more accurate resource for doing this. Entering the standard heat load Φ_{HL}, the type of heat output and the temperature difference Δ_T (flow/return) in the formula below produces the heating water flow rate $\dot{V}$.

System energy consumption in kWh

Heating without water heating	Heating plus water heating
System energy consumption in kWh/2200 = standard heat load Φ_{HL} in kW	System energy consumption in kWh/2600[1)] = standard heat load Φ_{HL} in kW

Standard heat load Φ_{HL} in kW [2)]

Underfloor heating	Low-temperature radiators	Normal/older radiators (max. flow emperature over 60°C)
(ΔT = 10 K) $\dot{V}$ in m³/h = Φ_{HL} in kW/12	(ΔT = 15 K) $\dot{V}$ in m³/h = Φ_{HL} in kW/18	(Δ_T = 20 K) $\dot{V}$ in m³/h = Φ_{HL} in kW/24

Flow rate $\dot{V}$ in m³/h

1) In newer buildings with combined water heating, 3000 must be used instead of 2600. If there is good thermal insulation in the building, the proportion of hot water will be higher.
2) If the standard heat load Φ_{HL} is distributed among multiple heating zones, the energy reference areas (heated gross floor areas) for the zones may be used as an allocation formula.

energieschweiz
Unser Engagement: unsere Zukunft.

MINERGIE®

suissetec

■ **Dimensioning aid**

2.2 CALCULATING THE PUMP HEAD

There are some simple reference values that can be used to calculate the correct pump head for heating zone pumps. The data is specified in water column metres (mWs). One mWs is equivalent to ten kilopascals (kPa).

Underfloor heating	1.5 mWs to 3 mWs
Normal radiator heating	1 mWs
Very large radiator heating zones	Up to 2 mWs

There are no reference values for other applications or heating zones with heat meters in a circuit. Calculations in these cases must be carried out in the same way as when planning a new system.

3 DIMENSIONING FOR NEW SYSTEMS

3.1 CALCULATING THE FLOW RATE

The standard heat load Φ_{HL} according to planner calculations in line with SIA 384.201 is used in the formula below. If a planning value is not available, the reference values for existing buildings are applied to the design temperature differences Δ_T. This enables the required flow rate $\dot{V}$ to be determined for rough dimensioning purposes.

Standard heat load Φ_{HL} in kW [1)]

Underfloor heating [2)]	Low-temperature radiators	Normal/older radiators (max. flow temperature over 60°C)
(ΔT = 10 K)	(ΔT = 15 K)	(Δ_T = 20 K)
$\dot{V}$ in m³/h =	$\dot{V}$ in m³/h =	$\dot{V}$ in m³/h =
Φ_{HL} in kW/12	Φ_{HL} in kW/18	Φ_{HL} in kW/24

Flow rate $\dot{V}$ in m³/h

1) If the standard heat load Φ_{HL} is distributed among multiple heating zones, the energy reference areas (heated gross floor areas) for the zones may be used as an allocation formula.
2) In the case of TABS and a flow temperature below 30°C (systems with a self-regulating effect), Δ_T may be 5 K or lower.

3.2 CALCULATING THE PUMP HEAD

The required pump head H is determined using the pipe system calculations and the individual resistance levels. If the pipe system is generously dimensioned, it is possible to make an estimate using reference values. If a pump head of more than 2 mWs is calculated for the heating zone pump (in the case of underfloor heating or very large systems), or 1.5 mWs for radiator heating, check the calculation. The system will need to be adjusted in such cases (larger nominal diameters, heat meters and fittings with low pressure losses, etc.). The values should not be any higher than the reference values.

If there is a pressure level of more than 1.5 mWs to 2 mWs at thermostatic valves, this will present a risk of whistling or flowing noises occurring during operation. Under no circumstances should you select or set an excessively high pump head, even if you believe you are doing so as a precaution.

4 SELECTING PUMPS

The reference values for the flow rate $\dot{V}$ and the pump head H can be used to identify an appropriate pump for the heating zone in a pump catalogue or with the aid of a pump search tool. You should never select replacement pumps solely on the basis of the connection dimensions in a replacement guide, as the connection dimensions of correctly dimensioned pumps will often be smaller than those of the existing pipe system. It is worth making even these small installation adjustments that reduce nominal diameters.

4.1 OPERATING POINT AND PUMP CHARACTERISTIC

Finding exactly the right pump requires some knowledge of how pumps behave in heating systems. Getting this selection right will make adjustment easier, prevent noise-related issues and achieve significant savings in electricity costs. A pump diagram is the best way to explain how circulating pumps behave both with and without speed control.

Pump head calculation example

Underfloor heating circuits (0.2 mWs to 0.6 mWs)	0.5
Heating circuit manifolds/(thermostatic) valves	0.2
Pipe system: longest length x 0.005 mWs per metre for 50 m	0.25
Flow temperature control valve	0.3
Heat meter, heating boiler: according to data sheet	0.25
Total	**1.5 mWs**

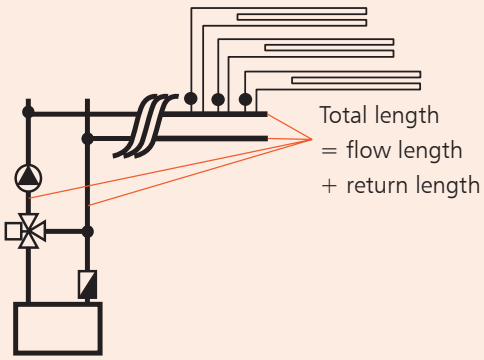

Dimensioning aid

The point at which the flow rate $\dot{V}$ and the pump characteristic intersect is operating point A. The operating point should be at approximately two thirds of the maximum pump flow rate. If the flow rate is throttled – by thermostatic valves or by radiator valves closing, for instance – the operating point moves to the left according to how and whether the pump is controlled.

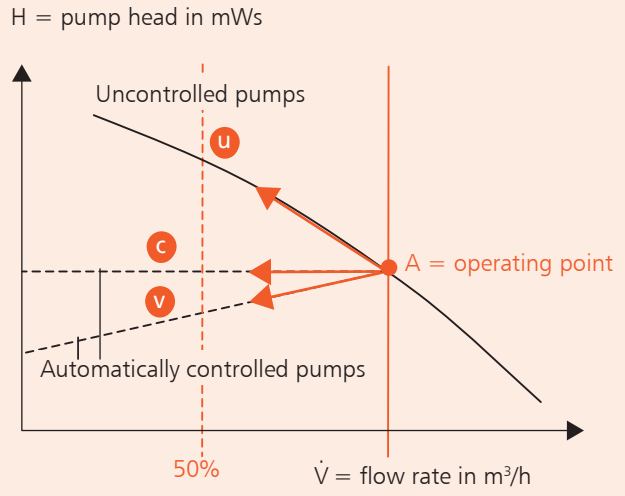

u Uncontrolled pumps

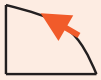

The pump head H increases. In the case of heating zones, uncontrolled pumps should only be used if they have a flat characteristic. If the pump head demonstrates an increasing trend, there is the risk of valve noises occurring. At a 50% flow rate, H should not exceed 2 mWs.

c Automatically controlled pumps: constant pump head setting

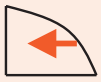

Speed-controlled pumps with this control method can be used in all types of applications. The required pump head must be known in order to make the right setting.

v Automatically controlled pumps: variable or proportional pump head setting

This control method is particularly beneficial in systems with high levels of flow resistance, as the pump head will fall when throttling occurs. If the control characteristic demonstrates a steeply declining trend, however, there is the risk of consumers that are further away receiving an insufficient supply.

4.2 WHICH CHARACTERISTIC SETTING FOR WHICH APPLICATION?

- Proportional pressure characteristics are suitable for heating zones with thermostatic or zone valves, as well as for radiators and underfloor heating. Constant pressure characteristics may provide a remedy in cases that are experiencing valve noise issues or radiators with poor through-flow.
- Setting a constant pump head makes sense in applications with a flow rate that is normally constant (heat generator, heat source and solar circuit pumps as well as hot water circulation and storage tank charging pumps), as it is easy to adjust the output in these cases.
- When working with compact heating units, be sure to install pumps with a low energy efficiency index value and that the pumps are dimensioned to suit the heat output system. From 1st August 2015, pumps that are installed will also have to comply with the EEI limit value. A setting that is appropriate for the system is required for pumps in units as well.

5 COMMISSIONING AND SETTING

Making the right setting is key to ensuring that speed-controlled, multi-stage pumps operate as they are supposed to. The setting value should be specified on a label, ideally attached to the pump. This will prevent the maximum from being set as a "precaution" the next time servicing work is performed.
It is possible to set the control type as well as a characteristic or pump head (for the characteristic maximum) in the case of most speed-controlled pumps:

- Constant characteristic ("c") for most applications.
- Variable characteristic ("v" or "p") for systems with high levels of flow resistance.
- Characteristic value or pump head as calculated (see "Calculating the pump head"). **Caution**: The set value usually applies to the characteristic's maximum flow rate. The automatically controlled flow rate will be lower than this in most cases.

If uncontrolled pumps with speed stages are being used, the pump diagram in the data sheet will need be consulted and the stage selected with the information in Section 4 taken into consideration.

Pump:	**ABX 30**
Setting value:	**C, item 1.5**
Set on:	**7.11.2015**
By:	**J. Bloggs**

Heat+Pump Ltd, Comfort Town, AB1 XY2
Tel. 022 222 22 22

■ **Dimensioning aid**

What should you do if some radiators are still cold?

1. Flush: The circuit will need to be flushed after installation (and you may need to repeat this process).
2. Bleed: After refilling, bleeding (carried out correctly) will often need to be carried out again after a few days.
3. Balance: Any hydraulic balancing that is carried out must be performed carefully using line regulators.
4. Check: Check the presetting of thermostatic valves and adjustable lockshield valves, and adjust them if necessary. Radiators near the pump are usually somewhat throttled.
5. If all else fails: Set the pump to a higher stage or characteristic.

6 CHECKING THE DIMENSIONING

6.1 THE PER-THOUSAND RULE

The electrical power consumption of the pump is around one per thousand (1‰) of the required thermal heating output.

The per-thousand rule applies to efficient heating zone pumps in detached and semi-detached homes. In multiple-family homes, the power consumption may be significantly lower than one per thousand (1‰). In the case of new pumps with automatic speed control, the effective working point in the system (at the maximum flow rate with all the valves open) must be used for the purposes of checking the dimensioning, as these pumps are able to cover a more extensive flow rate range while maintaining a good efficiency level. If it is not possible to show the electrical power consumption on the display, the pump data sheet will need to be consulted for the purpose of checking the dimensioning.

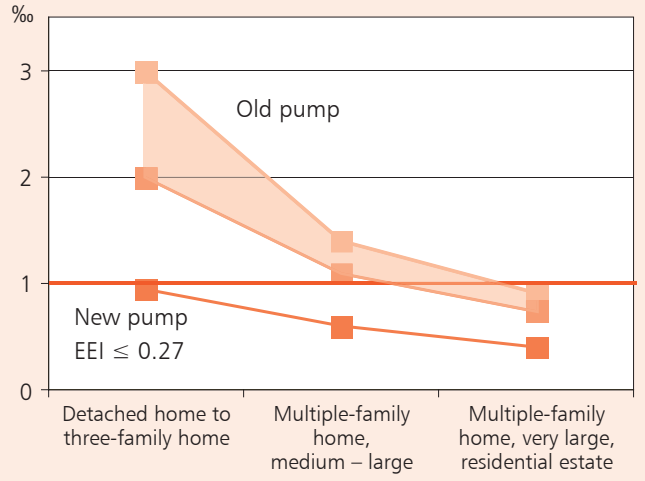

Relationship between the electrical pump output and the maximum thermal heating output required (standard heat load Φ_{HL}): per-thousand rule, 1‰ = 0.001. Moves downwards in the case of very cold climates (around 1/3 lower) and upwards in the case of warm ones. Moves up to 1/2 of the value upwards in the case of underfloor heating.

6.2 CHECKING PUMPS IN OPERATION ON THE BASIS OF THE TEMPERATURE DIFFERENCE

A temperature difference between the flow and return in the heating zone should be determined using the graphic. If it is much lower, the pump is overdimensioned or has too high a setting. Lower the pump setting.

Temperature difference between flow and return in K

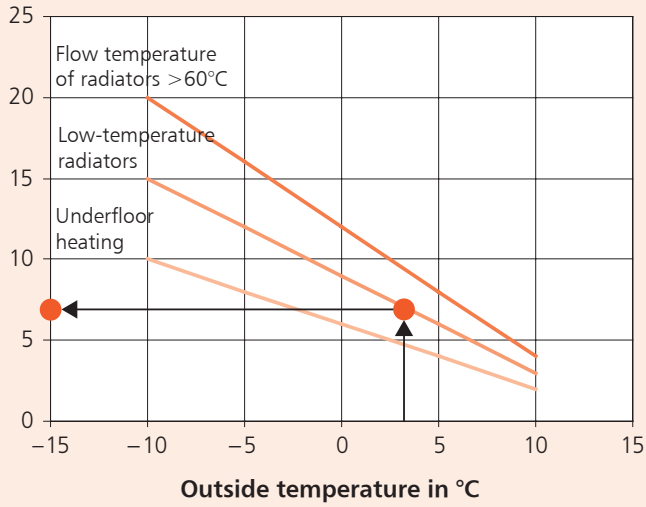

Example: Heating with low-temperature radiators, outside temperature + 3°C, ideal temperature difference 7 K.

SwissEnergy
Swiss Federal Office of Energy SFOE
Mühlestrasse 4, 3063 Ittigen, Switzerland
Postal address: 3003 Bern, Switzerland
Tel. +41 (0) 31 322 56 11, fax +41 (0) 31 323 25 00
energieschweiz@bfe.admin.ch, www.energieschweiz.ch

Version 2015

■ ErP directive (2009/125/EC)

ErP directive (2009/125/EC)
In the year 2005 the European Union passed the directive 2005/32/EC with requirements for the environmentally sound design of energy-using products. It has been known since then as the EuP or Ecodesign Directive. The abbreviation EuP stands for “energy using products”, and it means that the directive covers all products which consume energy (apart from motor vehicles and public means of transport). On 20 November 2009 it was replaced by the new directive 2009/125/EC. The most important change is that the area of application was widened from “energy-driven products” to “energy-related products”. It is usually abbreviated as “ErP Directive” or referred to as the Ecodesign Directive. The Ecodesign Directive is an outline directive with basic requirements for the environmentally-friendly design of products. Specific regulations for product categories within the framework of this directive apply to devices such as circulating pumps in glandless pumps, electric motors of glanded pumps and the glanded pumps themselves. The EU Commission has defined minimum efficiency requirements for the corresponding products in these three sets of regulations. In some areas, they go far beyond the requirements of the earlier energy efficiency class A for glandless circulating pumps. A separate regulation covers not only the drives for glanded pumps, but also the efficiency of the parts in contact with fluid within the pump. These regulations will be implemented in several steps or in the coming years.

Glandless circulating pumps:
This will significantly change the market for glandless circulating pumps. Because almost entirely uncontrolled versions are used in many EU countries.
These have an enormous energy consumption, however. In contrast, considerable potential savings and greenhouse gas reductions can be achieved with high-efficiency pumps due to their particularly low electricity consumption. According to the European Commission, the directive could save about half the energy consumption of glandless circulating pumps throughout Europe by 2020. This amounts to the giant quantity of **23 terawatt hours of energy per year** – the energy production of approx. six medium-sized coal-fired power stations. This corresponds to a reduction of **CO_2 emissions in Europe of about 11 million tonnes per year**.

The yardstick for determining which pump models will be allowed to be used in the future is referred to as the energy efficiency index (EEI). This is calculated using a process defined in the directives (EC) 641/2009 and (EC) 622/2012. Here, the electrical power of the pump in question, which is measured using a load profile, is compared to that of a reference pump, i.e. an average pump with the same hydraulic output.

Three stages are planned:
1. Since January 1, 2013, the Energy Efficiency Index (EEI) limit value was specified as 0.27 for glandless circulating pumps brought into circulation that are installed outside the heat generator (standalone pumps). The previously specified energy efficiency classes then no longer exist. This step makes circulating pumps more efficient than the minimum requirements for the previous class A. The energy efficiency classes are then obsolete.
2. From August 2015, the EEI limit value will be reduced further to 0.23. This will also apply to glandless circulating pumps, designed to operate in newly installed heat generators or solar thermal systems (integrated pumps).
3. In the final implementation stage, the specifications starting from 2020 will also apply for the replacement of integrated pumps in existing heat generators. All glandless circulating pumps in the heating, air-conditioning and solar sectors will be affected. Domestic hot water circulating pumps are an exception to this.

In this way, the highly efficient single pump series Stratos, Stratos PICO plus and Yonos PICO already satisfy the very stringent requirements which come into effect in 2015 under the second stage of the regulations for glandless circulating pumps (the reference value for the most efficient circulating pumps is EEI ≤ 0.20). This means you can immediately start contributing to more energy efficiency in heating systems!

The ErP Directive for glandless circulating pumps (Regulation (EC) 641/2009 and (EU) 622/2012) imposes ever stricter efficiency limit values. With Wilo, you meet all these in one go.

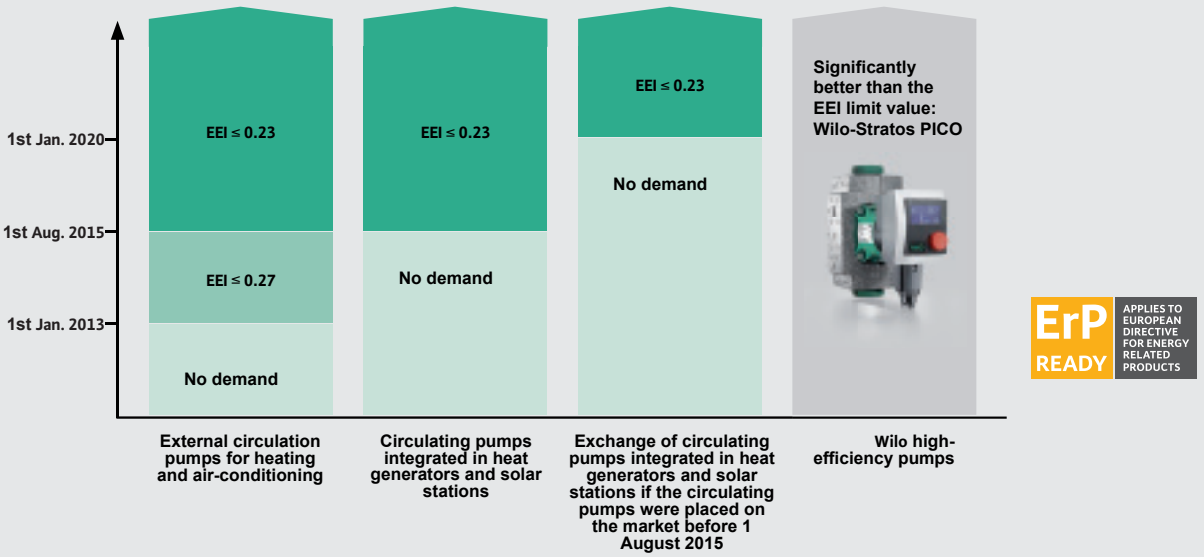

EEI = Energy efficiency index according to Regulation (EC) 641/2009 and (EU) 622/2012 by the EU Commission (calculated for various power consumption values within a load profile by comparison with an average reference pump).

General information / selection criteria

- The Hoval type comparison offers you optimum solution options in order to exchange older or defective pumps as easily as possible.
- The exchange proposals are worked out based on
  - Nominal diameter / installation length
  - Hydraulic output
  - Electrical connection (Three-phase current / single-phase)
- The proposed pumps are in accordance with the latest regulations, and with their energy efficiency index (EEI) they meet the strict limit values of the ErP Directive 2009/125/EC.

- **Selection criteria**
  - The installation length / nominal diameter of the pumps correspond where possible to the dimensions of the pump to be replaced.
  - Various adapters are available for compensating for differences in installation dimensions. These are listed in the “AGS” columns, and must also be ordered if necessary.
  - In flange pumps with a nominal diameter up to and including DN 65, the dimensions of the mating flanges must be checked when exchanging (different flange sizes between PN6 and PN 10)
  - Combination flanges PN6/10 are not allowed to be connected to other combination flanges.

- Take advantage of exchanging the pump as an opportunity to check the delivery rate and optimise the system.
  - Take account of any pump stages that are set for this purpose
  - In addition, checking based on the temperature difference may be helpful (see dimensioning assistance)
  - Take account of the electrical connection, voltage, control unit, etc.
  - The motor with terminal box can be rotated through 90° if required
  - Hoval system pump sets (SPS) contain appropriate accessories for rapid exchange and the easiest possible electrical connection

- **Procedure for making the right choice**

Search for:	- Existing nominal diameter
	- Pump type to be replaced
Select:	- New pump
Note:	- “AGS” and “Rem.” column
	- Electrical connection

Electrical connection in pump replacement

Molex connection system (SMO)

- The Molex connection system makes it possible to achieve a rapid electrical connection when exchanging.

  Plug connections of existing pumps as well as heating armature groups (from 2007 onwards) are compatible with the new Hoval system pump sets (SPS).

- The Molex connection system saves space and installation time during pump replacement and new installation!

  The following Hoval system components are equipped with the Molex connection system:
  - Hoval system pump sets
  - Hoval heating armature groups

Notice
See “Engineering” for detailed electrical connection possibilities for system pump sets and HSP pump.

Existing circulating pump:
(Connection system from 2007 onwards)

New circulating pump:

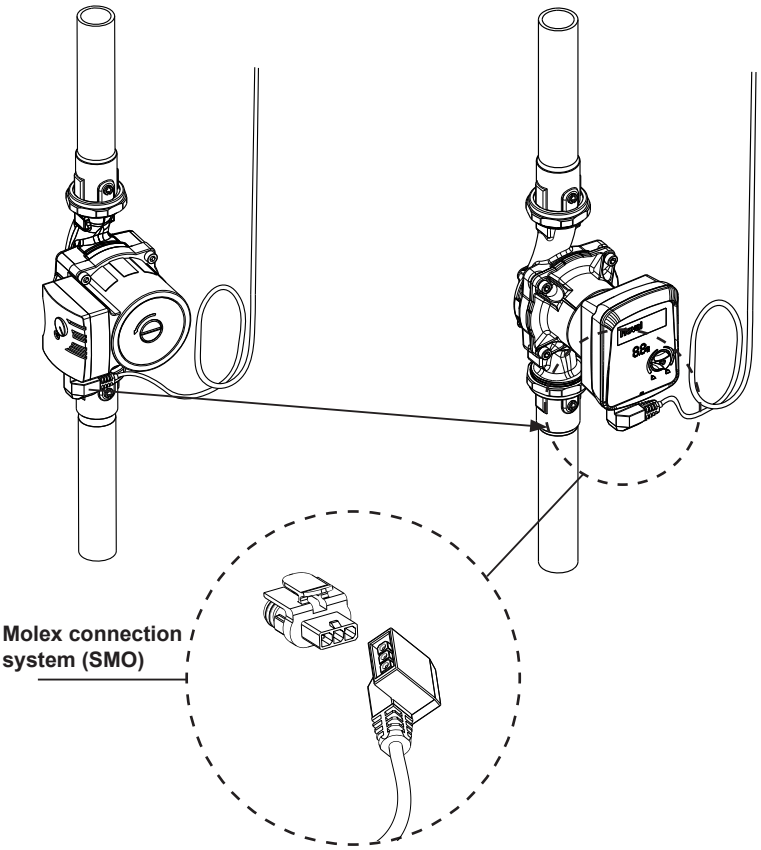

General information

Technical instructions for the exchange

Installation position
The pump must be installed in the pipeline, however it is routed, without stress (in all operating conditions) with a horizontal shaft, with the terminal box at the top or to the side.

Exception:
Up to nominal diameter DN 65, all pumps are equipped with combination flanges PN 6/10. The supplied washers must be used. Mounting a combination flange against a combination flange is not permitted.

RCCB protection
The pumps can be used without restrictions even in existing installations with and without RCCB circuit breakers.

Attention:
For high-efficiency pumps with alternating current connection (HSP, Yonos, Stratos), operation is permitted on RCCB devices according to DIN EN 61008-1 without any functional impairment of the RCCB device (DIN VDE 0160). Suitable RCCB circuit breakers can be identified by

Stratos modules

Stratos single pumps
IF module for Stratos single pumps.
With digital interface for data exchange
of control commands and messages.

Stratos-D double pumps

Stratos-D pump with 2 IF modules
For connection and data exchange between the two IF modules (accessories), the connecting cable (approx. 0.7 m, 2-core) supplied with the IF module (only with IF module Stratos PLR and IF module Stratos DP) must be connected to the terminal boxes of the pumps.

Electrical connection
Connection of a three-phase pump
1 ~ 230 V on the three-phase system 3 ~ 400 V
The voltage between any phase (L1, L2 or L3)
and the neutral conductor N is U = 230 V.
If there is no neutral conductor N then a new cable
with neutral conductor must be laid.

Pump operation
Open/closed-loop pump control
- The electrical operating conditions according to VDE 0160 must be complied with when operating the pumps with control units or module accessories.
- In frequency inverter operation, output filters must be used for noise reduction on the motor and to avoid damaging voltage peaks, and the following limit values must be complied with:

Glandless pumps P2 ≤ 2.2 kW

- Voltage peaks û < 650 V
- Speed of voltage rise du/dt < 500 V/µs

For the noise reduction of glandless pump motors, it is recommended that sine filters (LC filters) be used rather than du/dt filters (RC filters).

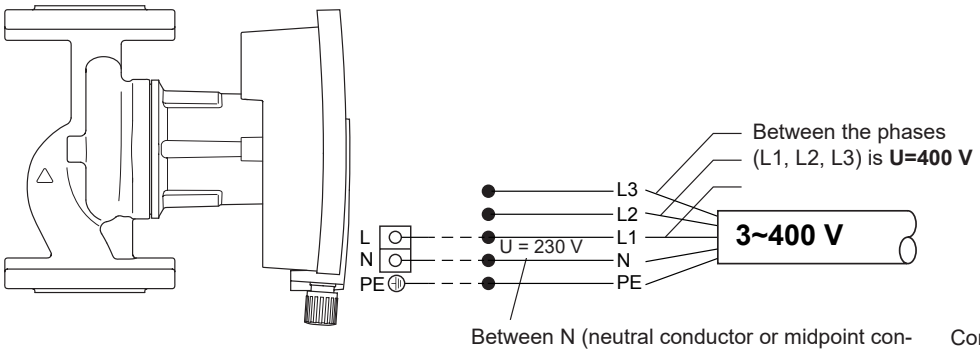

Between N (neutral conductor or midpoint conductor) and any phase (either L1 or L2 or L3) is **U = 230 V**

Connection of a three-phase pump 1~230V on the three-phase system 3~400V

Stratos motor protection
Motor protection is assured with Stratos pumps as follows.
- Pumps with blocking-current proof motors:
  No motor protection required. The motors are designed in such a way that the windings are not damaged in the event of an overload.

Part No.

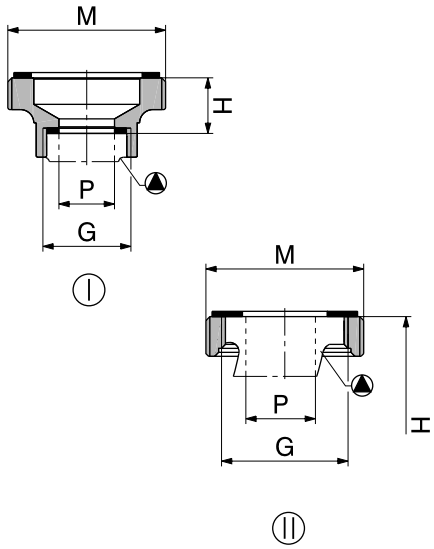

Pump adapter set		2 adapters and 2 or 4 seals					Part No.
Type		Pump		Pipeline			
		P	G	R	M	H	
		DN		*DN*		*mm*	
PAS11*	I	15	G 1	20	G 1¼	20	6040 846
PAS12*	II	15	G 1	25	G 1½	0	6040 847
PAS13*	I	15	G 1	25	G 1½	20	6040 848
PAS14*	I	15	G 1	25	G 1½	50	6040 849
PAS15*	I	15	G 1	30	G 2	40	6040 850
PAS16*	II	15	G 1½	25	G 2	0	6040 851
PAS17*	I	15	G 1	30	G 2	50	6047 972

* made of brass CW612N, approved for domestic hot water circulation systems

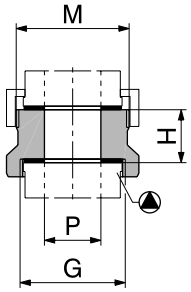

Adapter	1 adapter and 2 seals					
Type	Pump		Pipeline			
	P	G	R	M	H	
	DN		*DN*		*mm*	
R01	25	G 1½	25	G 1½	30	6043 623
R02	25	G 1½	25	G 1½	40	6043 624
R05*	25	G 1½	32	G 2	5	6041 025
R07	25	G 1½	32	G 2	20	6041 026
R12*	25	G 1½	40	G 2¼	5	6041 027
R08	32	G 2	32	G 2	20	6041 028
R09	32	G 2	32	G 2	25	6043 626
R10	32	G 2	32	G 2	30	6041 029
R14	32	G 2	32	G 2	40	6043 625
R22*	32	G 2	32	G 2	40	6041 030

* made of brass CW612N, approved for domestic hot water circulation systems

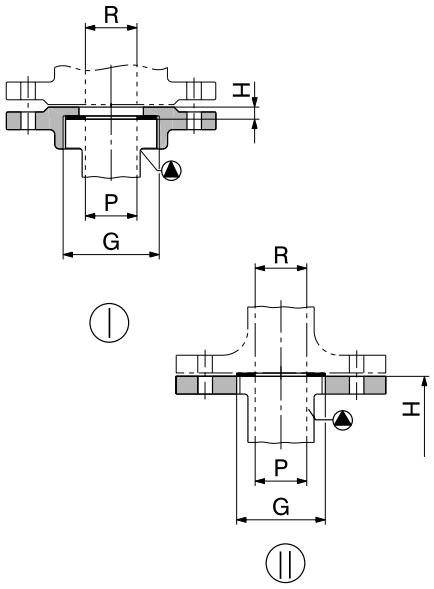

Threaded flange			1 flange, 2 seals and screws				
Type			Pump		Pipeline		
			P	G	R	H	
	PN		*DN*		*DN*	*mm*	
RF01	6	II	32	G 2	32	0	6041 113
RF03	6	I	32	G 2	32	20	6041 114
RF04	6	I	32	G 2	32	35	6041 085
RF04	10/16	I	32	G 2	32	35	6041 086
RF12	6	I	32	G 2	40	10	6041 115
RF05	6	I	32	G 2	50	20	6041 116
RF05	10/16	I	32	G 2	50	20	6041 117
RF06	6	I	32	G 2	50	35	6041 118
RF06	10/16	I	32	G 2	50	35	6041 119

Hoval

Part No.

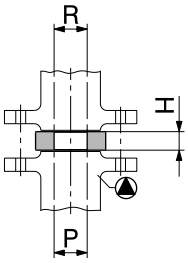

Intermediate unit	1 intermediate unit, 2 seals and screws				Part No.
Type		Pump	Pipeline		
		P	R	H	
	PN	*DN*	*DN*	*mm*	
F00	6	40	40	15	6041 120
F00	10/16	40	40	15	6041 121
F01	6	40	40	30	6041 122
F01	10/16	40	40	30	6041 123
F01-MS*	6	40	40	30	6041 124
F01-MS*	10/16	40	40	30	6041 125
F26	6	40	40	50	6041 126
F26	10/16	40	40	50	6041 127
F02	6	50	50	10	6041 031
F02	10/16	50	50	10	6041 032
F03	6	50	50	20	6041 128
F03	10/16	50	50	20	6041 129
F04	6	50	50	30	6041 130
F04	10/16	50	50	30	6041 131
F40	10/16	50	50	160	6043 627
F09	6	65	65	10	6041 083
F09	10/16	65	65	10	6041 084
F10	6	65	65	20	6041 132
F10	10/16	65	65	20	6041 133
F11	6	65	65	30	6041 181
F11	10/16	65	65	30	6041 182
F28	6	65	65	40	6041 087
F28	10/16	65	65	40	6041 088
F29	6	65	65	45	6041 089
F29	10/16	65	65	45	6041 090
F41	10/16	65	65	135	6043 628
F16	6	80	80	10	6041 134
F17	6	80	80	20	6041 135
F30	6	80	80	25	6041 136
F30	10/16	80	80	25	6041 137
F18	6	80	80	40	6041 138
F42	10/16	80	80	140	6043 629
F34	6	100	100	35	6041 139
F34	10/16	100	100	35	6041 140
F35	6	100	100	55	6041 141
F35	10/16	100	100	55	6041 142

* made of brass CW612N, approved for domestic hot water circulation systems

Technical data

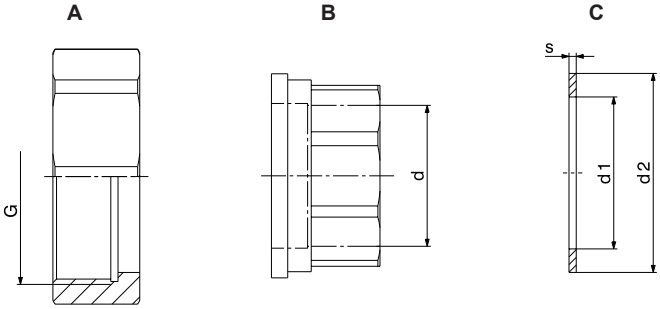

Pipe screw connections

DN	A	B	C
	G	*d*	*d1 / d2 x s*
15	G 1	Rp ½ Rp ¾	ø 21 / 30 x 2
20	G 1¼	Rp ¾	ø 27 / 38 x 2
25	G 1½	Rp 1	ø 32 / 44 x 2
30	G 2	Rp 1¼	ø 42 / 55 x 2

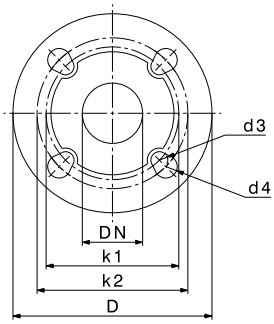

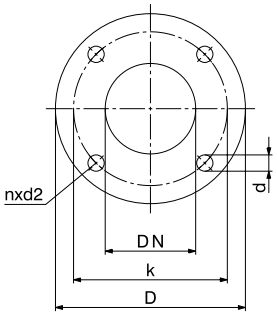

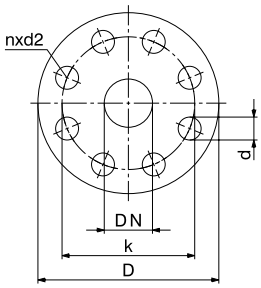

Combination flange
PN 6/10

DN	D	k1	k2	d3	d4
32	140	90	100	14	19
40	150	100	110	14	19
50	165	110	125	14	19
65	185	130	145	14	19

Flange
PN 6

DN	D	k	d	n x d2
32	120	90	14	4x M12
40	130	100	14	4x M12
50	140	110	14	4x M12
65	160	130	14	4x M12
80	190	150	19	4x M16
100	210	170	19	4x M16

Flange
PN 10/16

DN	D	k	d	n x d2
32	140	100	19	4x M16
40	150	110	19	4x M16
50	165	125	19	4x M16
65	185	145	19	4x M16
80	200	160	19	8x M16
100	220	180	19	8x M16

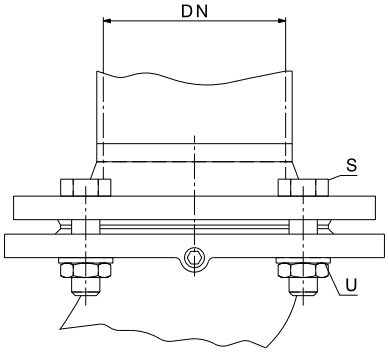

Up to nominal diameter DN 65, all pumps are equipped with combination flanges PN 6/10. For a secure attachment (S), the supplied washers (U) must be mounted on the pump side.

Seal sets including the fastening elements (screws, nuts) are available for exchanging flange pumps.

Abbreviations and remarks

Type	Pump name
SMO	**Molex connection system** (See “Electrical connection in pump replacement”)
PN	**Nominal pressure (bar)**
	Note the connection dimensions of flange pumps.
M	**Motor**
1	1x230 V, 50 Hz
3	3x400 V, 50 Hz
3/1	3x400 V, 1x230 V
G/DN	**Nominal diameter**
G	Thread on pump housing
L	**Installation length (mm)**
AGS	**Compensation pieces**
01-99	AGS no.
-	No AGS necessary
RA	Adapt pipeline
Rem.	**Remarks**
7	without venting
9	Old pump 3x400 V, new 1x230 V
14	Note control signal Analog 0-10 V PWM1 / PM1 PWM2 / PM2 or with Stratos IF modules

Biral				Hoval													
Type	PN	M	L	Type	PN	M	G/DN	L	AGS	Rem.	Type	PN	M	G/DN	L	AGS	Rem.
Heating circulating pumps																	
G 1 (Rp ½)																	
AX12-4	10	1	130	HSP 15/4 130 SMO	6	1	G1	130	-		Stratos Pico 15/4 130	10	1	G1	130	-	
AX13-4	10	1	130	HSP 15/6 130 SMO	6	1	G1	130	-		Stratos Pico 15/6 130	10	1	G1	130	-	
AX15-4 Red	10	1	130	HSP 15/4 130 SMO	6	1	G1	130	-		Stratos Pico 15/4 130	10	1	G1	130	-	
AX15-6 Red	10	1	130	HSP 15/6 130 SMO	6	1	G1	130	-		Stratos Pico 15/6 130	10	1	G1	130	-	
M10-4	10	1	130	HSP 15/4 130 SMO	6	1	G1	130	-		Stratos Pico 15/4 130	10	1	G1	130	-	
M12-4	10	1	130	HSP 15/4 130 SMO	6	1	G1	130	-		Stratos Pico 15/4 130	10	1	G1	130	-	
M13-4	10	1	130	HSP 15/6 130 SMO	6	1	G1	130	-		Stratos Pico 15/6 130	10	1	G1	130	-	
MX10-4	10	1	130	HSP 15/4 130 SMO	6	1	G1	130	-		Stratos Pico 15/4 130	10	1	G1	130	-	
MX12-4	10	1	130	HSP 15/4 130 SMO	6	1	G1	130	-		Stratos Pico 15/4 130	10	1	G1	130	-	
MX13-4	10	1	130	HSP 15/6 130 SMO	6	1	G1	130	-		Stratos Pico 15/6 130	10	1	G1	130	-	
Primax 15-3 130 Red	10	1	130	HSP 15/4 130 SMO	6	1	G1	130	-		Stratos Pico 15/4 130	10	1	G1	130	-	
Primax 15-4 130 Red	10	1	130	HSP 15/4 130 SMO	6	1	G1	130	-		Stratos Pico 15/4 130	10	1	G1	130	-	
Primax 15-6 130 Red	10	1	130	HSP 15/6 130 SMO	6	1	G1	130	-		Stratos Pico 15/6 130	10	1	G1	130	-	
Primax 15-8 130 Red	10	1	130	SPS-S 15/7.5 130SMO	6	1	G1	130	-								
Yonos Pico 15/4 130	6	1	130	HSP 15/4 130 SMO	6	1	G1	130	-		Stratos Pico 15/4 130	10	1	G1	130	-	
Yonos Pico 15/6 130	6	1	130	HSP 15/6 130 SMO	6	1	G1	130	-		Stratos Pico 15/6 130	10	1	G1	130	-	
G 1½ (Rp 1)																	
A12-1	10	1	180	HSP 25/6 180 SMO	6	1	G1½	180	-		Stratos 25/4 180	10	1	G1½	180	-	14
A13-1	10	1	180	SPS-S 25/7.5 180SMO	6	1	G1½	180	-		Stratos 25/6 180	10	1	G1½	180	-	14
A14-1	10	1	180	SPS-I 25/8 180	10	1	G1½	180	-	14	Stratos 25/8 180	10	1	G1½	180	-	14
A15-1	10	1	180	SPS-I 25/8 180	10	1	G1½	180	-	14	Stratos 25/8 180	10	1	G1½	180	-	14
A16-1	10	1	180	SPS-I 25/12 180	10	1	G1½	180	-	14	Stratos 25/10 180	10	1	G1½	180	-	14
AX10-1	10	1	180	HSP 25/4 180 SMO	6	1	G1½	180	-		Stratos Pico 25/4 180	10	1	G1½	180	-	
AX12-1	10	1	180	HSP 25/4 180 SMO	6	1	G1½	180	-		Stratos Pico 25/4 180	10	1	G1½	180	-	
AX12-3	10	1	130	HSP 15/4 130 SMO	6	1	G1	130	1x PAS12		Stratos Pico 25/4 130	10	1	G1½	130	-	
AX13-1	10	1	180	HSP 25/6 180 SMO	6	1	G1½	180	-		Stratos Pico 25/6 180	10	1	G1½	180	-	
AX13-3	10	1	130	HSP 15/6 130 SMO	6	1	G1	130	1x PAS12		Stratos Pico 25/6 130	10	1	G1½	130	-	
AX25-3 180 Red	10	1	180	HSP 25/4 180 SMO	6	1	G1½	180	-		Stratos Pico 25/4 180	10	1	G1½	180	-	
AX25-4 130 Red	10	1	130	HSP 15/4 130 SMO	6	1	G1	130	1x PAS12		Stratos Pico 25/4 130	10	1	G1½	130	-	
AX25-4 180 Red	10	1	180	HSP 25/4 180 SMO	6	1	G1½	180	-		Stratos Pico 25/4 180	10	1	G1½	180	-	
AX25-6 130 Red	10	1	130	HSP 15/6 130 SMO	6	1	G1	130	1x PAS12		Stratos Pico 25/6 130	10	1	G1½	130	-	
AX25-6 180 Red	10	1	180	HSP 25/6 180 SMO	6	1	G1½	180	-		Stratos Pico 25/6 180	10	1	G1½	180	-	
HX301-1	10	3	180	SPS-I 25/8 180	10	1	G1½	180	-	9	Stratos 25/6 180	10	1	G1½	180	-	9
HX302-1	10	3	180	SPS-I 25/8 180	10	1	G1½	180	-	9	Stratos 25/8 180	10	1	G1½	180	-	9
L321-1	10	3/1	180	HSP 25/4 180 SMO	6	1	G1½	180	-	9	Stratos Pico 25/4 180	10	1	G1½	180	-	
L322-1	10	3/1	180	HSP 25/6 180 SMO	6	1	G1½	180	-	9	Stratos Pico 25/6 180	10	1	G1½	180	-	
L323-1	10	3/1	180	HSP 25/6 180 SMO	6	1	G1½	180	-	9	Stratos Pico 25/6 180	10	1	G1½	180	-	
LX321-1	10	3/1	180	HSP 25/4 180 SMO	6	1	G1½	180	-	9	Stratos Pico 25/4 180	10	1	G1½	180	-	
LX322-1	10	3/1	180	SPS-I 25/8 180	10	1	G1½	180	-	9	Stratos 25/4 180	10	1	G1½	180	-	9
LX323-1	10	3/1	180	SPS-I 25/8 180	10	1	G1½	180	-	9	Stratos 25/4 180	10	1	G1½	180	-	9
M10-1	10	1	180	HSP 25/4 180 SMO	6	1	G1½	180	-		Stratos Pico 25/4 180	10	1	G1½	180	-	
M10-3	10	1	130	HSP 15/4 130 SMO	6	1	G1	130	1x PAS12		Stratos Pico 25/4 130	10	1	G1½	130	-	
M12-1	10	1	180	HSP 25/4 180 SMO	6	1	G1½	180	-		Stratos Pico 25/4 180	10	1	G1½	180	-	
M12-3	10	1	130	HSP 15/4 130 SMO	6	1	G1	130	1x PAS12		Stratos Pico 25/4 130	10	1	G1½	130	-	
M13-1	10	1	180	HSP 25/6 180 SMO	6	1	G1½	180	-		Stratos Pico 25/4 180	10	1	G1½	180	-	
M13-3	10	1	130	HSP 15/6 130 SMO	6	1	G1	130	1x PAS12		Stratos Pico 25/6 130	10	1	G1½	130	-	
M14-1	10	1	180	SPS-I 25/8 180	10	1	G1½	180	-								
M15-1	10	1	180	SPS-I 25/8 180	10	1	G1½	180	-		Stratos 25/8 180	10	1	G1½	180	-	
MC10-1	10	1	180	HSP 25/4 180 SMO	6	1	G1½	180	-		Stratos Pico 25/4 180	10	1	G1½	180	-	
MC12-1	10	1	180	HSP 25/4 180 SMO	6	1	G1½	180	-		Stratos Pico 25/4 180	10	1	G1½	180	-	
ME12-1	10	1	180	HSP 25/4 180 SMO	6	1	G1½	180	-		Stratos Pico 25/4 180	10	1	G1½	180	-	
ME12-3	10	1	130	HSP 15/4 130 SMO	6	1	G1	130	1x PAS12		Stratos Pico 25/4 130	10	1	G1½	130	-	
ME13-1	10	1	180	HSP 25/6 180 SMO	6	1	G1½	180	-		Stratos Pico 25/6 180	10	1	G1½	180	-	
ME13-3	10	1	130	HSP 15/6 130 SMO	6	1	G1	130	1x PAS12		Stratos Pico 25/6 130	10	1	G1½	130	-	
ME14-1	10	1	180	SPS-I 25/8 180	10	1	G1½	180	-								
ME15-1	10	1	180	SPS-I 25/8 180	10	1	G1½	180	-								
ModulA 25-4 180 Red	10	1	180	SPS-I 25/8 180	10	1	G1½	180	-	14	Stratos 25/4 180	10	1	G1½	180	-	14
ModulA 25-6 180 Red	10	1	180	SPS-I 25/8 180	10	1	G1½	180	-	14	Stratos 25/6 180	10	1	G1½	180	-	14
ModulA 25-8 180 Red	10	1	180	SPS-I 25/8 180	10	1	G1½	180	-	14	Stratos 25/8 180	10	1	G1½	180	-	14
ModulA 25-10 180 Red	10	1	180	SPS-I 25/12 180	10	1	G1½	180	-	14	Stratos 25/10 180	10	1	G1½	180	-	14
ModulA 25-12 180 Red	10	1	180	SPS-I 25/12 180	10	1	G1½	180	-	14	Stratos 25/12 180	10	1	G1½	180	-	14
MX10-1	10	1	180	HSP 25/4 180 SMO	6	1	G1½	180	-		Stratos Pico 25/4 180	10	1	G1½	180	-	
MX10-3	10	1	130	HSP 15/4 130 SMO	6	1	G1	130	1x PAS12		Stratos Pico 25/4 130	10	1	G1½	130	-	
MX12-1	10	1	180	HSP 25/4 180 SMO	6	1	G1½	180	-		Stratos Pico 25/4 180	10	1	G1½	180	-	
MX12-3	10	1	130	HSP 15/4 130 SMO	6	1	G1	130	1x PAS12		Stratos Pico 25/4 130	10	1	G1½	130	-	
MX13-1	10	1	180	HSP 25/6 180 SMO	6	1	G1½	180	-		Stratos Pico 25/6 180	10	1	G1½	180	-	
MX13-3	10	1	130	HSP 15/6 130 SMO	6	1	G1	130	1x PAS12		Stratos Pico 25/6 130	10	1	G1½	130	-	
MXE12-1	10	1	180	HSP 25/4 180 SMO	6	1	G1½	180	-		Stratos Pico 25/4 180	10	1	G1½	180	-	
MXE12-3	10	1	130	HSP 15/4 130 SMO	6	1	G1	130	1x PAS12		Stratos Pico 25/4 130	10	1	G1½	130	-	
MXE13-1	10	1	180	HSP 25/6 180 SMO	6	1	G1½	180	-		Stratos Pico 25/6 180	10	1	G1½	180	-	
MXE13-3	10	1	130	HSP 15/6 130 SMO	6	1	G1	130	1x PAS12		Stratos Pico 25/6 130	10	1	G1½	130	-	
MXE14-1	10	1	180	SPS-I 25/8 180	10	1	G1½	180	-								
MXE15-1	10	1	180	SPS-I 25/8 180	10	1	G1½	180	-								
NRB10 S-1	10	1	180	HSP 25/4 180 SMO	6	1	G1½	180	-		Stratos Pico 25/4 180	10	1	G1½	180	-	
NRB11 S-1	10	1	180	HSP 25/4 180 SMO	6	1	G1½	180	-		Stratos Pico 25/4 180	10	1	G1½	180	-	
NRB11 S-3	10	1	130	HSP 15/4 130 SMO	6	1	G1	130	1x PAS12		Stratos Pico 25/4 130	10	1	G1½	130	-	
NRB11 SZ-1	10	1	180	HSP 25/4 180 SMO	6	1	G1½	180	-		Stratos Pico 25/4 180	10	1	G1½	180	-	

Biral				Hoval													
Type	PN	M	L	Type	PN	M	G/DN	L	AGS	Rem.	Type	PN	M	G/DN	L	AGS	Rem.
NRB11-1	10	1	180	HSP 25/4 180 SMO	6	1	G1½	180	-		Stratos Pico 25/4 180	10	1	G1½	180	-	
NRB11-3	10	1	130	HSP 15/4 130 SMO	6	1	G1	130	1x PAS12		Stratos Pico 25/4 130	10	1	G1½	130	-	
NRB12 S-1	10	1	180	HSP 25/4 180 SMO	6	1	G1½	180	-		Stratos Pico 25/4 180	10	1	G1½	180	-	
NRB12 S-3	10	1	130	HSP 15/4 130 SMO	6	1	G1	130	1x PAS12		Stratos Pico 25/4 130	10	1	G1½	130	-	
NRB12 SZ-1	10	1	180	HSP 25/4 180 SMO	6	1	G1½	180	-		Stratos Pico 25/4 180	10	1	G1½	180	-	
NRB12 T-1	10	1	180	HSP 25/4 180 SMO	6	1	G1½	180	-		Stratos Pico 25/4 180	10	1	G1½	180	-	
NRB12 T-3	10	1	130	HSP 15/4 130 SMO	6	1	G1	130	1x PAS12		Stratos Pico 25/4 130	10	1	G1½	130	-	
NRB12-1	10	1	180	HSP 25/4 180 SMO	6	1	G1½	180	-		Stratos Pico 25/4 180	10	1	G1½	180	-	
NRB13 S-1	10	1	180	HSP 25/6 180 SMO	6	1	G1½	180	-		Stratos Pico 25/6 180	10	1	G1½	180	-	
NRB13 S-3	10	1	130	HSP 15/6 130 SMO	6	1	G1	130	1x PAS12		Stratos Pico 25/6 130	10	1	G1½	130	-	
NRB13 T-1	10	1	180	HSP 25/6 180 SMO	6	1	G1½	180	-		Stratos Pico 25/6 180	10	1	G1½	180	-	
NRB13 T-3	10	1	130	HSP 15/6 130 SMO	6	1	G1	130	1x PAS12		Stratos Pico 25/6 130	10	1	G1½	130	-	
NRB13 TE-1	10	1	180	HSP 25/6 180 SMO	6	1	G1½	180	-		Stratos Pico 25/6 180	10	1	G1½	180	-	
NRB13 TE-3	10	1	130	HSP 15/6 130 SMO	6	1	G1	130	1x PAS12		Stratos Pico 25/6 130	10	1	G1½	130	-	
NRB14 S-1	10	1	180	SPS-I 25/8 180	10	1	G1½	180	-		Stratos 25/6 180	10	1	G1½	180	-	
NRB14 T-1	10	1	180	SPS-I 25/8 180	10	1	G1½	180	-		Stratos 25/6 180	10	1	G1½	180	-	
NRB15 S-1	10	1	180	SPS-I 25/8 180	10	1	G1½	180	-		Stratos 25/8 180	10	1	G1½	180	-	
NRB15 T-1	10	1	180	SPS-I 25/8 180	10	1	G1½	180	-		Stratos 25/8 180	10	1	G1½	180	-	
NRB15 TE-1	10	1	180	SPS-I 25/8 180	10	1	G1½	180	-		Stratos 25/8 180	10	1	G1½	180	-	
NRZ25 S-1	10	3	180	SPS-I 25/8 180	10	1	G1½	180	-	9	Stratos 25/4 180	10	1	G1½	180	-	9
NRZ25-1	10	3	180	SPS-I 25/8 180	10	1	G1½	180	-	9	Stratos 25/4 180	10	1	G1½	180	-	9
NRZ30 S-1	10	3	180	SPS-I 25/8 180	10	1	G1½	180	-	9	Stratos 25/4 180	10	1	G1½	180	-	9
NRZ30-1	10	3	180	SPS-I 25/8 180	10	1	G1½	180	-	9	Stratos 25/4 180	10	1	G1½	180	-	9
NRZ35 S-1	10	3	180	SPS-I 25/8 180	10	1	G1½	180	-	9	Stratos 25/4 180	10	1	G1½	180	-	9
NRZ35-1	10	3	180	SPS-I 25/8 180	10	1	G1½	180	-	9	Stratos 25/4 180	10	1	G1½	180	-	9
Primax 25-3 130 Red	10	1	130	HSP 15/4 130 SMO	6	1	G1	130	1x PAS12		Stratos Pico 25/4 130	10	1	G1½	130	-	
Primax 25-4 130 Red	10	1	130	HSP 15/4 130 SMO	6	1	G1	130	1x PAS12		Stratos Pico 25/4 130	10	1	G1½	130	-	
Primax 25-6 130 Red	10	1	130	HSP 15/6 130 SMO	6	1	G1	130	1x PAS12		Stratos Pico 25/6 130	10	1	G1½	130	-	
Primax 25-8 130 Red	10	1	130	SPS-S 15/7.5 130	6	1	G1	130	1x PAS12								
Primax 25-3 180 Red	10	1	180	HSP 25/4 180 SMO	6	1	G1½	180	-		Stratos Pico 25/4 180	10	1	G1½	180	-	
Primax 25-4 180 Red	10	1	180	HSP 25/4 180 SMO	6	1	G1½	180	-		Stratos Pico 25/4 180	10	1	G1½	180	-	
Primax 25-6 180 Red	10	1	180	HSP 25/6 180 SMO	6	1	G1½	180	-		Stratos Pico 25/6 180	10	1	G1½	180	-	
Primax 25-8 180 Red	10	1	180	SPS-S 25/7.5 180	6	1	G1½	180	-								
RB010-1	10	1	180	HSP 25/4 180 SMO	6	1	G1½	180	-		Stratos Pico 25/4 180	10	1	G1½	180	-	
RB10-1	10	1	180	HSP 25/4 180 SMO	6	1	G1½	180	-		Stratos Pico 25/4 180	10	1	G1½	180	-	
RB11-1	10	1	180	HSP 25/4 180 SMO	6	1	G1½	180	-		Stratos Pico 25/4 180	10	1	G1½	180	-	
RB12 S-1	10	1	180	HSP 25/4 180 SMO	6	1	G1½	180	-		Stratos Pico 25/4 180	10	1	G1½	180	-	
RB12-1	10	1	180	HSP 25/4 180 SMO	6	1	G1½	180	-		Stratos Pico 25/4 180	10	1	G1½	180	-	
RB13-1	10	1	180	HSP 25/6 180 SMO	6	1	G1½	180	-		Stratos Pico 25/6 180	10	1	G1½	180	-	
RB14-1	10	1	180	SPS-I 25/8 180	10	1	G1½	180	-		Stratos 25/6 180	10	1	G1½	180	-	
RB15 S-1	10	1	180	SPS-I 25/8 180	10	1	G1½	180	-		Stratos 25/8 180	10	1	G1½	180	-	
RB15-1	10	1	180	SPS-I 25/8 180	10	1	G1½	180	-		Stratos 25/8 180	10	1	G1½	180	-	
Yonos Pico 25/4 130	10	1	130	HSP 15/4 130 SMO	6	1	G1	130	1x PAS12		Stratos Pico 25/4 130	10	1	G1½	130	-	
Yonos Pico 25/6 130	10	1	130	HSP 15/4 130 SMO	6	1	G1	130	1x PAS12		Stratos Pico 25/4 130	10	1	G1½	130	-	
Yonos Pico 25/4 180	10	1	180	HSP 25/4 180 SMO	6	1	G1½	180	-		Stratos Pico 25/4 180	10	1	G1½	180	-	
Yonos Pico 25/6 180	10	1	180	HSP 25/6 180 SMO	6	1	G1½	180	-		Stratos Pico 25/6 180	10	1	G1½	180	-	
Yonos Pico 25/8 180	10	1	180	SPS-S 25/7.5 180	6	1	G1½	180	-								
Z24	10	1	190	HSP 25/4 180 SMO	6	1	G1½	180	RA		Stratos Pico 25/4 180	10	1	G1½	180	RA	
Z33	10	1	160	HSP 25/4 180 SMO	6	1	G1½	180	RA		Stratos Pico 25/4 180	10	1	G1½	180	RA	
1"-2" Oval flange																	
M10F	10	1	158	HSP 15/4 130 SMO	6	1	G1	130	RA		Stratos Pico 15/4 130	10	1	G1	130	RA	
M12F	10	1	158	HSP 15/4 130 SMO	6	1	G1	130	RA		Stratos Pico 15/4 130	10	1	G1	130	RA	
M13F	10	1	158	HSP 15/6 130 SMO	6	1	G1	130	RA		Stratos Pico 15/6 130	10	1	G1	130	RA	
MX10F	10	1	158	HSP 15/4 130 SMO	6	1	G1	130	RA		Stratos Pico 15/4 130	10	1	G1	130	RA	
MX12F	10	1	158	HSP 15/4 130 SMO	6	1	G1	130	RA		Stratos Pico 15/4 130	10	1	G1	130	RA	
MX13F	10	1	158	HSP 15/6 130 SMO	6	1	G1	130	RA		Stratos Pico 15/6 130	10	1	G1	130	RA	
NRF10S	10	1	158	HSP 15/4 130 SMO	6	1	G1	130	RA		Stratos Pico 15/4 130	10	1	G1	130	RA	
NRF11S	10	1	158	HSP 15/4 130 SMO	6	1	G1	130	RA		Stratos Pico 15/4 130	10	1	G1	130	RA	
NRF11SZ	10	1	158	HSP 15/4 130 SMO	6	1	G1	130	RA		Stratos Pico 15/4 130	10	1	G1	130	RA	
NRF12S	10	1	158	HSP 15/4 130 SMO	6	1	G1	130	RA		Stratos Pico 15/4 130	10	1	G1	130	RA	
NRF12SZ	10	1	158	HSP 15/4 130 SMO	6	1	G1	130	RA		Stratos Pico 15/4 130	10	1	G1	130	RA	
NRF12T	10	1	158	HSP 15/4 130 SMO	6	1	G1	130	RA		Stratos Pico 15/4 130	10	1	G1	130	RA	
NRF13S	10	1	158	HSP 15/6 130 SMO	6	1	G1	130	RA		Stratos Pico 15/6 130	10	1	G1	130	RA	
NRF13T	10	1	158	HSP 15/6 130 SMO	6	1	G1	130	RA		Stratos Pico 15/6 130	10	1	G1	130	RA	
NRF14S	10	1	158	SPS-I 25/8 180	10	1	G1½	180	RA		Stratos 25/6 180	10	1	G1½	180	RA	
NRF14T	10	1	158	SPS-I 25/8 180	10	1	G1½	180	RA		Stratos 25/8 180	10	1	G1½	180	RA	
NRF15S	10	1	158	SPS-I 25/8 180	10	1	G1½	180	RA		Stratos 25/8 180	10	1	G1½	180	RA	
NRF15T	10	1	158	SPS-I 25/8 180	10	1	G1½	180	RA		Stratos 25/8 180	10	1	G1½	180	RA	
RF0	10	1	158	HSP 15/4 130 SMO	6	1	G1	130	RA		Stratos Pico 15/4 130	10	1	G1	130	RA	
RF010	10	1	158	HSP 15/4 130 SMO	6	1	G1	130	RA		Stratos Pico 15/4 130	10	1	G1	130	RA	
RF1	10	1	158	HSP 15/4 130 SMO	6	1	G1	130	RA		Stratos Pico 15/4 130	10	1	G1	130	RA	
RF2	10	1	158	HSP 15/4 130 SMO	6	1	G1	130	RA		Stratos Pico 15/4 130	10	1	G1	130	RA	
RF3	10	1	158	HSP 15/6 130 SMO	6	1	G1	130	RA		Stratos Pico 15/6 130	10	1	G1	130	RA	
RF10	10	1	158	HSP 15/4 130 SMO	6	1	G1	130	RA		Stratos Pico 15/4 130	10	1	G1	130	RA	
RF11	10	1	158	HSP 15/4 130 SMO	6	1	G1	130	RA		Stratos Pico 15/4 130	10	1	G1	130	RA	
RF12	10	1	158	HSP 15/4 130 SMO	6	1	G1	130	RA		Stratos Pico 15/4 130	10	1	G1	130	RA	
RF12S	10	1	158	HSP 15/4 130 SMO	6	1	G1	130	RA		Stratos Pico 15/4 130	10	1	G1	130	RA	
RF13	10	1	158	HSP 15/6 130 SMO	6	1	G1	130	RA		Stratos Pico 15/6 130	10	1	G1	130	RA	
RF14	10	1	158	SPS-I 25/8 180	10	1	G1½	180	RA		Stratos 25/6 180	10	1	G1½	180	RA	

Biral				Hoval													
Type	PN	M	L	Type	PN	M	G/DN	L	AGS	Rem.	Type	PN	M	G/DN	L	AGS	Rem.
RF15	10	1	158	SPS-I 25/8 180	10	1	G1½	180	RA		Stratos 25/8 180	10	1	G1½	180	RA	
RF15S	10	1	158	SPS-I 25/8 180	10	1	G1½	180	RA		Stratos 25/8 180	10	1	G1½	180	RA	
G 2 (Rp 1¼)																	
A12	10	1	170	HSP 15/6 130 SMO	6	1	G1	130	1x PAS15		Stratos Pico 15/6 130	6	1	G1	130	1x PAS15	
A12-2	10	1	180	HSP 30/6 180 SMO	6	1	G2	180	-		Stratos 30/4 180	10	1	G2	180	-	
A13	10	1	170	SPS-S 15/7.5 130SMO	6	1	G1	130	1x PAS15		Stratos Pico 15/6 130	6	1	G1	130	1x PAS15	
A13-2	10	1	180	SPS-S 30/7.5 180SMO	6	1	G2	180	-		Stratos 30/6 180	10	1	G2	180	-	
A14	10	1	170	SPS-I 25/8 130	10	1	G1½	130	2x R07	14							
A14-2	10	1	180	SPS-I 30/8 180	10	1	G2	180	-	14							
A15	10	1	170	SPS-I 25/8 130	10	1	G1½	130	2x R07	14	Stratos 30/8 180	10	1	G2	180	RA	14
A15-2	10	1	180	SPS-I 30/8 180	10	1	G2	180	-	14	Stratos 30/8 180	10	1	G2	180	-	14
A16-2	10	1	180	SPS-I 30/12 180	10	1	G2	180	-	14	Stratos 30/10 180	10	1	G2	180	-	14
AX10	10	1	170	HSP 15/4 130 SMO	6	1	G1	130	1x PAS15		Stratos Pico 15/4 130	6	1	G1	130	1x PAS15	
AX12	10	1	170	HSP 15/4 130 SMO	6	1	G1	130	1x PAS15		Stratos Pico 15/4 130	6	1	G1	130	1x PAS15	
AX12-2	10	1	180	HSP 30/4180SMO	6	1	G2	180	-		Stratos Pico 30/4 180	6	1	G2	180	-	
AX13	10	1	170	HSP 15/6 130 SMO	6	1	G1	130	1x PAS15		Stratos Pico 15/6 130	6	1	G1	130	1x PAS15	
AX13-2	10	1	180	HSP 30/6 180SMO	6	1	G2	180	-		Stratos Pico 30/6 180	6	1	G2	180	-	
H321	10	3	190	SPS-I 25/8 180	10	1	G1½	180	2x R05	9	Stratos 25/8 180	10	1	G1½	180	2x R05	9
H321	10	1	190	SPS-I 25/8 180	10	1	G1½	180	2x R05		Stratos 25/8 180	10	1	G1½	180	2x R05	
H321-2	10	3	180	SPS-I 30/8 180	10	1	G2	180	-	9	Stratos 30/8 180	10	1	G2	180	-	9
H321-2	10	1	180	SPS-I 30/8 180	10	1	G2	180	-		Stratos 30/8 180	10	1	G2	180	-	
H322	10	3/1	190	SPS-I 25/12 180	10	1	G1½	180	2x R05	9	Stratos 25/10 180	10	1	G1½	180	2x R05	9
H322-2	10	3/1	180	SPS-I 30/12 180	10	1	G2	180	-	9	Stratos 30/10 180	10	1	G2	180	-	9
HX301	10	3	190	SPS-I 25/8 180	10	1	G1½	180	2x R05	9	Stratos 25/6 180	10	1	G1½	180	2x R05	9
HX301-2	10	3	180	SPS-I 30/8 180	10	1	G2	180	-	9	Stratos 30/6 180	10	1	G2	180	-	9
HX302	10	3	190	SPS-I 25/8 180	10	1	G1½	180	2x R05	9	Stratos 25/8 180	10	1	G1½	180	2x R05	9
HX302-2	10	3	180	SPS-I 30/8 180	10	1	G2	180	-	9	Stratos 30/8 180	10	1	G2	180	-	9
HX321	10	3	190	SPS-I 25/8 180	10	1	G1½	180	2x R05	9	Stratos 25/8 180	10	1	G1½	180	2x R05	9
HX321	10	1	190	SPS-I 25/8 180	10	1	G1½	180	2x R05		Stratos 25/8 180	10	1	G1½	180	2x R05	
HX321-2	10	3	180	SPS-I 30/8 180	10	1	G2	180	-	9	Stratos 30/8 180	10	1	G2	180	-	9
HX321-2	10	1	180	SPS-I 30/8 180	10	1	G2	180	-		Stratos 30/8 180	10	1	G2	180	-	
HX322	10	3/1	190	SPS-I 25/12 180	10	1	G1½	180	2x R05	9	Stratos 25/10 180	10	1	G1½	180	2x R05	9
HX322-2	10	3/1	180	SPS-I 30/12 180	10	1	G2	180	-	9	Stratos 30/10 180	10	1	G2	180	-	9
AX32-3 170 Red	10	1	170	HSP 15/4 130 SMO	6	1	G1	130	1x PAS15		Stratos Pico 15/4 130	6	1	G1	130	1x PAS15	
AX32-4 170 Red	10	1	170	HSP 15/4 130 SMO	6	1	G1	130	1x PAS15		Stratos Pico 15/4 130	6	1	G1	130	1x PAS15	
AX32-4 180 Red	10	1	180	HSP 30/4 180SMO	6	1	G2	180	-		Stratos Pico 30/4 180	6	1	G2	180	-	
AX32-6 170 Red	10	1	170	HSP 15/6 130 SMO	6	1	G1	130	1x PAS15		Stratos Pico 15/6 130	6	1	G1	130	1x PAS15	
AX32-6 180 Red	10	1	180	HSP 30/6 180SMO	6	1	G2	180	-		Stratos Pico 30/6 180	6	1	G2	180	-	
L321	10	3/1	190	HSP 25/4 180 SMO	6	1	G1½	180	2x R05	9	Stratos Pico 25/4 180	6	1	G1½	180	2x R05	9
L321-2	10	3/1	180	HSP 30/4 180 SMO	6	1	G2	180	-	9	Stratos Pico 30/4 180	6	1	G2	180	-	9
L322	10	3/1	190	HSP 25/4 180 SMO	6	1	G1½	180	2x R05	9	Stratos Pico 25/4 180	6	1	G1½	180	2x R05	9
L322-2	10	3/1	180	HSP 30/4 180 SMO	6	1	G2	180	-	9	Stratos Pico 30/4 180	6	1	G2	180	-	9
L323	10	3/1	190	HSP 25/6 180 SMO	6	1	G1½	180	2x R05	9	Stratos Pico 25/6 180	6	1	G1½	180	2x R05	9
L323	10	3/1	210	HSP 30/6 180 SMO	6	1	G2	180	1x R10	9	Stratos Pico 30/6 180	6	1	G2	180	1x R10	9
L323-2	10	3/1	180	HSP 30/6 180 SMO	6	1	G2	180	-	9	Stratos Pico 30/6 180	6	1	G2	180	-	9
L325	10	3/1	190	SPS-I 25/8 180	10	1	G1½	180	2x R05	9	Stratos 25/8 180	10	1	G1½	180	2x R05	9
L325	10	3/1	210	SPS-I 30/8 180	10	1	G2	180	1x R10	9	Stratos 30/8 180	10	1	G2	180	1x R10	9
L326	10	3/1	190	SPS-I 25/12 180	10	1	G1½	180	2x R05	9	Stratos 25/10 180	10	1	G1½	180	2x R05	9
L326	10	3/1	210	SPS-I 30/12 180	10	1	G2	180	1x R10	9	Stratos 30/10 180	10	1	G2	180	1x R10	9
LE326	10	1	190	SPS-I 25/12 180	10	1	G1½	180	2x R05	9	Stratos 25/10 180	10	1	G1½	180	2x R05	9
LX321	10	3/1	190	HSP 25/6 180 SMO	6	1	G1½	180	2x R05	9	Stratos Pico 25/6 180	6	1	G1½	180	2x R05	9
LX321-2	10	3/1	180	HSP 30/6 180 SMO	6	1	G2	180	-	9	Stratos Pico 30/6 180	6	1	G2	180	-	9
LX322	10	3/1	190	HSP 25/6 180 SMO	6	1	G1½	180	2x R05	9	Stratos Pico 25/6 180	6	1	G1½	180	2x R05	9
LX322-2	10	3/1	180	HSP 30/6 180 SMO	6	1	G2	180	-	9	Stratos Pico 30/6 180	6	1	G2	180	-	9
LX323	10	3/1	190	SPS-I 25/8 180	10	1	G1½	180	2x R05	9	Stratos 25/4 180	10	1	G1½	180	2x R05	9
LX323-2	10	3/1	180	SPS-I 30/8 180	10	1	G2	180	-	9	Stratos 30/4 180	10	1	G2	180	-	9
LX325	10	3/1	190	SPS-I 25/8 180	10	1	G1½	180	2x R05	9	Stratos 25/8 180	10	1	G1½	180	2x R05	9
LX326	10	3/1	190	SPS-I 25/12 180	10	1	G1½	180	2x R05	9	Stratos 25/10 180	10	1	G1½	180	2x R05	9
LXE326	10	1	190	SPS-I 25/12 180	10	1	G1½	180	2x R05		Stratos 25/10 180	10	1	G1½	180	2x R05	
LXP326	10	1	190	SPS-I 25/12 180	10	1	G1½	180	2x R05		Stratos 25/10 180	10	1	G1½	180	2x R05	
M10	10	1	170	HSP 15/4 130 SMO	6	1	G1	130	1x PAS15		Stratos Pico 15/4 130	6	1	G1	130	1x PAS15	
M10-2	10	1	180	HSP 30/4 180SMO	6	1	G2	180	-		Stratos Pico 30/4 180	6	1	G2	180	-	
M12	10	1	170	HSP 15/4 130 SMO	6	1	G1	130	1x PAS15		Stratos Pico 15/4 130	6	1	G1	130	1x PAS15	
M12-2	10	1	180	HSP 30/4 180SMO	6	1	G2	180	-		Stratos Pico 30/4 180	6	1	G2	180	-	
M13	10	1	170	HSP 15/6 130 SMO	6	1	G1	130	1x PAS15		Stratos Pico 15/6 130	6	1	G1	130	1x PAS15	
M13-2	10	1	180	HSP 30/6 180SMO	6	1	G2	180	-		Stratos Pico 30/6 180	6	1	G2	180	-	
M14	10	1	170	SPS-I 25/8 130	10	1	G1½	130	2x R07	14							
M14-2	10	1	180	SPS-I 30/8 180	10	1	G2	180	-	14							
M15	10	1	170	SPS-I 25/8 130	10	1	G1½	130	2x R07	14	Stratos 30/8 180	10	1	G2	180	RA	
M15-2	10	1	180	SPS-I 30/8 180	10	1	G2	180	-	14	Stratos 30/8 180	10	1	G2	180	-	
MC10	10	1	170	HSP 15/4 130 SMO	6	1	G1	130	1x PAS15		Stratos Pico 15/4 130	6	1	G1	130	1x PAS15	
MC12	10	1	170	HSP 15/4 130 SMO	6	1	G1	130	1x PAS15		Stratos Pico 15/4 130	6	1	G1	130	1x PAS15	
ME12	10	1	170	HSP 15/4 130 SMO	6	1	G1	130	1x PAS15		Stratos Pico 15/4 130	6	1	G1	130	1x PAS15	
ME12-2	10	1	180	HSP 30/4 180SMO	6	1	G2	180	-		Stratos Pico 30/4 180	6	1	G2	180	-	
ME13	10	1	170	HSP 15/6 130 SMO	6	1	G1	130	1x PAS15		Stratos Pico 15/6 130	6	1	G1	130	1x PAS15	
ME13-2	10	1	180	HSP 30/6 180SMO	6	1	G2	180	-		Stratos Pico 30/6 180	6	1	G2	180	-	
ME14	10	1	170	SPS-I 25/8 130	10	1	G1½	130	2x R07	14							
ME14-2	10	1	180	SPS-I 30/8 180	10	1	G2	180	-	14							
ME15	10	1	170	SPS-I 25/8 130	10	1	G1½	130	2x R07	14	Stratos 30/8 180	10	1	G2	180	RA	

Biral				Hoval														
Type	PN	M	L	Type	PN	M	G/DN	L	AGS	Rem.	Type	PN	M	G/DN	L	AGS	Rem.
ME15-2	10	1	180	SPS-I 30/8 180	10	1	G2	180	-	14	Stratos 30/8 180	10	1	G2	180	-	
ModulA 32-4 170 Red	10	1	170	SPS-S 15/6 170 SMO	6	1	G1	130	1x PAS15	14	Stratos 30/6 180	10	1	G2	180	RA	14
ModulA 32-6 170 Red	10	1	170	SPS-S 15/7.5 170SMO	6	1	G1	130	1x PAS15	14	Stratos 30/6 180	10	1	G2	180	RA	14
ModulA 32-8 170 Red	10	1	170	SPS-I 25/8 130	10	1	G1½	130	2x R07	14	Stratos 30/8 180	10	1	G2	180	RA	14
ModulA 32-10 170 Red	10	1	170	SPS-I 30/12 180	10	1	G2	180	RA	14	Stratos 30/10 180	10	1	G2	180	RA	14
ModulA 32-12 170 Red	10	1	170	SPS-I 30/12 180	10	1	G2	180	RA	14	Stratos 30/12 180	10	1	G2	180	RA	14
ModulA 32-4 180 Red	10	1	180	SPS-S 30/6 180 SMO	6	1	G2	180	-	14	Stratos 30/6 180	10	1	G2	180	-	14
ModulA 32-6 180 Red	10	1	180	SPS-S 30/7.5 180SMO	6	1	G2	180	-	14	Stratos 30/6 180	10	1	G2	180	-	14
ModulA 32-8 180 Red	10	1	180	SPS-I 30/8 180	10	1	G2	180	-	14	Stratos 30/8 180	10	1	G2	180	-	14
ModulA 32-10 180 Red	10	1	180	SPS-I 30/12 180	10	1	G2	180	-	14	Stratos 30/10 180	10	1	G2	180	-	14
ModulA 32-12 180 Red	10	1	180	SPS-I 30/12 180	10	1	G2	180	-	14	Stratos 30/12 180	10	1	G2	180	-	14
MX10	10	1	170	HSP 15/4 130 SMO	6	1	G1	130	1x PAS15		Stratos Pico 15/4 130	6	1	G1	130	1x PAS15	
MX10-2	10	1	180	HSP 30/4 180 SMO	6	1	G2	180	-		Stratos Pico 30/4 180	6	1	G2	180	-	
MX12	10	1	170	HSP 15/4 130 SMO	6	1	G1	130	1x PAS15		Stratos Pico 15/4 130	6	1	G1	130	1x PAS15	
MX12-2	10	1	180	HSP 30/4 180 SMO	6	1	G2	180	-		Stratos Pico 30/4 180	6	1	G2	180	-	
MX13	10	1	170	HSP 15/6 130 SMO	6	1	G1	130	1x PAS15		Stratos Pico 15/6 130	6	1	G1	130	1x PAS15	
MX13-2	10	1	180	HSP 30/6 180SMO	6	1	G2	180	-		Stratos Pico 30/6 180	6	1	G2	180	-	
MXE12	10	1	170	HSP 15/4 130 SMO	6	1	G1	130	1x PAS15		Stratos Pico 15/4 130	6	1	G1	130	1x PAS15	
MXE12-2	10	1	180	HSP 30/4 180 SMO	6	1	G2	180	-		Stratos Pico 30/4 180	6	1	G2	180	-	
MXE13	10	1	170	HSP 15/6 130 SMO	6	1	G1	130	1x PAS15		Stratos Pico 15/6 130	6	1	G1	130	1x PAS15	
MXE13-2	10	1	180	HSP 30/6 180 SMO	6	1	G2	180	-		Stratos Pico 30/6 180	6	1	G2	180	-	
MXE14	10	1	170	SPS-I 25/8 130	10	1	G1½	130	2x R07								
MXE14-2	10	1	180	SPS-I 30/8 180	10	1	G2	180	-								
MXE15	10	1	170	SPS-I 25/8 130	10	1	G1½	130	2x R07		Stratos 30/8 180	10	1	G2	180	RA	
MXE15-2	10	1	180	SPS-I 30/8 180	10	1	G2	180	-		Stratos 30/8 180	10	1	G2	180	-	
NRB10S	10	1	170	HSP 15/4 130 SMO	6	1	G1	130	1x PAS15		Stratos Pico 15/4 130	6	1	G1	130	1x PAS15	
NRB10S-2	10	1	180	HSP 30/4 180 SMO	6	1	G2	180	-		Stratos Pico 30/4 180	6	1	G2	180	-	
NRB11	10	1	170	HSP 15/4 130 SMO	6	1	G1	130	1x PAS15		Stratos Pico 15/4 130	6	1	G1	130	1x PAS15	
NRB11S	10	1	170	HSP 15/4 130 SMO	6	1	G1	130	1x PAS15		Stratos Pico 15/4 130	6	1	G1	130	1x PAS15	
NRB11S-2	10	1	180	HSP 30/4 180 SMO	6	1	G2	180	-		Stratos Pico 30/4 180	6	1	G2	180	-	
NRB11SZ	10	1	170	HSP 15/4 130 SMO	6	1	G1	130	1x PAS15		Stratos Pico 15/4 130	6	1	G1	130	1x PAS15	
NRB11SZ-2	10	1	180	HSP 30/4 180 SMO	6	1	G2	180	-		Stratos Pico 30/4 180	6	1	G2	180	-	
NRB11-2	10	1	180	HSP 30/4 180 SMO	6	1	G2	180	-		Stratos Pico 30/4 180	6	1	G2	180	-	
NRB12	10	1	170	HSP 15/4 130 SMO	6	1	G1	130	1x PAS15		Stratos Pico 15/4 130	6	1	G1	130	1x PAS15	
NRB12S	10	1	170	HSP 15/4 130 SMO	6	1	G1	130	1x PAS15		Stratos Pico 15/4 130	6	1	G1	130	1x PAS15	
NRB12S-2	10	1	180	HSP 30/4 180 SMO	6	1	G2	180	-		Stratos Pico 30/4 180	6	1	G2	180	-	
NRB12SZ	10	1	170	HSP 15/4 130 SMO	6	1	G1	130	1x PAS15		Stratos Pico 15/4 130	6	1	G1	130	1x PAS15	
NRB12SZ-2	10	1	180	HSP 30/4 180 SMO	6	1	G2	180	-		Stratos Pico 30/4 180	6	1	G2	180	-	
NRB12T	10	1	170	HSP 15/4 130 SMO	6	1	G1	130	1x PAS15		Stratos Pico 15/4 130	6	1	G1	130	1x PAS15	
NRB12T-2	10	1	180	HSP 30/4 180 SMO	6	1	G2	180	-		Stratos Pico 30/4 180	6	1	G2	180	-	
NRB12-2	10	1	180	HSP 30/4 180 SMO	6	1	G2	180	-		Stratos Pico 30/4 180	6	1	G2	180	-	
NRB13S	10	1	170	HSP 15/6 130 SMO	6	1	G1	130	1x PAS15		Stratos Pico 15/6 130	6	1	G1	130	1x PAS15	
NRB13S-2	10	1	180	HSP 30/6 180 SMO	6	1	G2	180	-		Stratos Pico 30/6 180	6	1	G2	180	-	
NRB13T	10	1	170	HSP 15/6 130 SMO	6	1	G1	130	1x PAS15		Stratos Pico 15/6 130	6	1	G1	130	1x PAS15	
NRB13T-2	10	1	180	HSP 30/6 180 SMO	6	1	G2	180	-		Stratos Pico 30/6 180	6	1	G2	180	-	
NRB13TE	10	1	170	HSP 15/6 130 SMO	6	1	G1	130	1x PAS15		Stratos Pico 15/6 130	6	1	G1	130	1x PAS15	
NRB13TE	10	1	170	SPS-I 25/8 130	10	1	G1½	130	2x R07		Stratos 30/4 180	10	1	G2	180	RA	
NRB13TE-2	10	1	180	HSP 30/6 180 SMO	6	1	G2	180	-		Stratos Pico 30/6 180	6	1	G2	180	-	
NRB13TE-2	10	1	180	SPS-I 30/8 180	10	1	G2	180	-		Stratos 30/4 180	10	1	G2	180	-	
NRB14S	10	1	170	SPS-I 25/8 130	10	1	G1½	130	2x R07		Stratos 30/6 180	10	1	G2	180	RA	
NRB14S-2	10	1	180	SPS-I 30/8 180	10	1	G2	180	-		Stratos 30/6 180	10	1	G2	180	-	
NRB14T	10	1	170	SPS-I 25/8 130	10	1	G1½	130	2x R07		Stratos 30/6 180	10	1	G2	180	RA	
NRB14T-2	10	1	180	SPS-I 30/8 180	10	1	G2	180	-		Stratos 30/6 180	10	1	G2	180	-	
NRB15S	10	1	170	SPS-I 25/8 130	10	1	G1½	130	2x R07		Stratos 30/8 180	10	1	G2	180	RA	
NRB15S-2	10	1	180	SPS-I 30/8 180	10	1	G2	180	-		Stratos 30/8 180	10	1	G2	180	-	
NRB15T	10	1	170	SPS-I 25/8 130	10	1	G1½	130	2x R07		Stratos 30/8 180	10	1	G2	180	RA	
NRB15T-2	10	1	180	SPS-I 30/8 180	10	1	G2	180	-		Stratos 30/8 180	10	1	G2	180	-	
NRB15TE	10	1	170	SPS-I 25/8 130	10	1	G1½	130	2x R07		Stratos 30/8 180	10	1	G2	180	RA	
NRB15TE-2	10	1	180	SPS-I 30/8 180	10	1	G2	180	-		Stratos 30/8 180	10	1	G2	180	-	
NRP30	10	3/1	190	SPS-I 25/8 180	10	1	G1½	180	2x R05	9	Stratos 25/4 180	10	1	G1½	180	2x R05	9
NRP30S	10	3	190	SPS-I 25/8 180	10	1	G1½	180	2x R05	9	Stratos 25/4 180	10	1	G1½	180	2x R05	9
NRZ25	10	3/1	190	SPS-I 25/8 180	10	1	G1½	180	2x R05	9	Stratos 25/4 180	10	1	G1½	180	2x R05	9
NRZ25S	10	3	190	SPS-I 25/8 180	10	1	G1½	180	2x R05	9	Stratos 25/4 180	10	1	G1½	180	2x R05	9
NRZ25S-2	10	3	180	SPS-I 30/8 180	10	1	G2	180	-	9	Stratos 30/4 180	10	1	G2	180	-	9
NRZ25-2	10	3/1	180	SPS-I 30/8 180	10	1	G2	180	-	9	Stratos 30/4 180	10	1	G2	180	-	9
NRZ30	10	3/1	190	SPS-I 25/8 180	10	1	G1½	180	2x R05	9	Stratos 25/4 180	10	1	G1½	180	2x R05	9
NRZ30S	10	3	190	SPS-I 25/8 180	10	1	G1½	180	2x R05	9	Stratos 25/4 180	10	1	G1½	180	2x R05	9
NRZ30S-2	10	3	180	SPS-I 30/8 180	10	1	G2	180	-	9	Stratos 30/4 180	10	1	G2	180	-	9
NRZ30-2	10	3/1	180	SPS-I 30/8 180	10	1	G2	180	-	9	Stratos 30/4 180	10	1	G2	180	-	9
NRZ35	10	3/1	210	SPS-I 30/8 180	10	1	G2	180	1x R10	9	Stratos 30/4 180	10	1	G2	180	1x R10	9
NRZ35S	10	3	210	SPS-I 30/8 180	10	1	G2	180	1x R10	9	Stratos 30/4 180	10	1	G2	180	1x R10	9
NRZ35-2	10	3/1	180	SPS-I 30/8 180	10	1	G2	180	-	9	Stratos 30/4 180	10	1	G2	180	-	9
NRZ35-2S	10	3	180	SPS-I 30/8 180	10	1	G2	180	-	9	Stratos 30/4 180	10	1	G2	180	-	9
NRZ39-1S	10	3	210	SPS-I 30/8 180	10	1	G2	180	1x R10	9	Stratos 30/8 180	10	1	G2	180	1x R10	9
NRZ39-2S	10	3	210	SPS-I 30/8 180	10	1	G2	180	1x R10	9	Stratos 30/8 180	10	1	G2	180	1x R10	9
NRZ39-3S	10	3	210	SPS-I 30/8 180	10	1	G2	180	1x R10	9	Stratos 30/4 180	10	1	G2	180	1x R10	9
NRZ44-1S	10	3	210	SPS-I 30/12 180	10	1	G2	180	1x R10	9	Stratos 30/10 180	10	1	G2	180	1x R10	9
P30-1	10	3/1	190	SPS-I 25/8 180	10	1	G1½	180	2x R05	9	Stratos 25/4 180	10	1	G1½	180	2x R05	9
P30-2	10	3/1	190	SPS-I 25/8 180	10	1	G1½	180	2x R05	9	Stratos 25/4 180	10	1	G1½	180	2x R05	9
Primax 32-3 170 Red	10	1	170	HSP 15/4 130 SMO	6	1	G1	130	1x PAS15		Stratos Pico 15/4 130	10	1	G1	130	1x PAS15	

Biral				Hoval													
Type	PN	M	L	Type	PN	M	G/DN	L	AGS	Rem.	Type	PN	M	G/DN	L	AGS	Rem.
Primax 32-4 170 Red	10	1	170	HSP 15/4 130 SMO	6	1	G1	130	1x PAS15		Stratos Pico 15/4 130	10	1	G1	130	1x PAS15	
Primax 32-6 170 Red	10	1	170	HSP 15/6 130 SMO	6	1	G1	130	1x PAS15		Stratos Pico 15/6 130	10	1	G1	130	1x PAS15	
Primax 32-8 170 Red	10	1	170	SPS-S 15/7.5 130SMO	6	1	G1	130	1x PAS15								
Primax 32-3 180 Red	10	1	180	HSP 30/4 180 SMO	6	1	G2	180	-		Stratos Pico 30/4 180	10	1	G2	180	-	
Primax 32-4 180 Red	10	1	180	HSP 30/4 180 SMO	6	1	G2	180	-		Stratos Pico 30/4 180	10	1	G2	180	-	
Primax 32-6 180 Red	10	1	180	HSP 30/6 180 SMO	6	1	G2	180	-		Stratos Pico 30/6 180	10	1	G2	180	-	
Primax 32-8 180 Red	10	1	180	SPS-S 30/7.5 180SMO	6	1	G2	180	-								
RB0	10	1	170	HSP 15/4 130 SMO	6	1	G1	130	1x PAS15		Stratos Pico 15/4 130	6	1	G1	130	1x PAS15	
RB010	10	1	170	HSP 15/4 130 SMO	6	1	G1	130	1x PAS15		Stratos Pico 15/4 130	6	1	G1	130	1x PAS15	
RB010-2	10	1	180	HSP 30/4 180 SMO	6	1	G2	180	-		Stratos Pico 30/4 180	6	1	G2	180	-	
RB1	10	1	170	HSP 15/4 130 SMO	6	1	G1	130	1x PAS15		Stratos Pico 15/4 130	6	1	G1	130	1x PAS15	
RB10	10	1	170	HSP 15/4 130 SMO	6	1	G1	130	1x PAS15		Stratos Pico 15/4 130	6	1	G1	130	1x PAS15	
RB10-2	10	1	180	HSP 30/4 180 SMO	6	1	G2	180	-		Stratos Pico 30/4 180	6	1	G2	180	-	
RB11	10	1	170	HSP 15/4 130 SMO	6	1	G1	130	1x PAS15		Stratos Pico 15/4 130	6	1	G1	130	1x PAS15	
RB11-2	10	1	180	HSP 30/4 180 SMO	6	1	G2	180	-		Stratos Pico 30/4 180	6	1	G2	180	-	
RB12	10	1	170	HSP 15/4 130 SMO	6	1	G1	130	1x PAS15		Stratos Pico 15/4 130	6	1	G1	130	1x PAS15	
RB12S	10	1	170	HSP 15/4 130 SMO	6	1	G1	130	1x PAS15		Stratos Pico 15/4 130	6	1	G1	130	1x PAS15	
RB12S-2	10	1	180	HSP 30/4 180 SMO	6	1	G2	180	-		Stratos Pico 30/4 180	6	1	G2	180	-	
RB12-2	10	1	180	HSP 30/4 180 SMO	6	1	G2	180	-		Stratos Pico 30/4 180	6	1	G2	180	-	
RB13	10	1	170	HSP 15/6 130 SMO	6	1	G1	130	1x PAS15		Stratos Pico 15/6 130	6	1	G1	130	1x PAS15	
RB13-2	10	1	180	HSP 30/6 180 SMO	6	1	G2	180	-		Stratos Pico 30/6 180	6	1	G2	180	-	
RB14	10	1	170	SPS-I 25/8 130	10	1	G1½	130	2x R07		Stratos 30/6 180	10	1	G2	180	RA	
RB14-2	10	1	180	SPS-I 30/8 180	10	1	G2	180	-		Stratos 30/6 180	10	1	G2	180	-	
RB15	10	1	170	SPS-I 25/8 130	10	1	G1½	130	2x R07		Stratos 30/8 180	10	1	G2	180	RA	
RB15S	10	1	170	SPS-I 25/8 130	10	1	G1½	130	2x R07		Stratos 30/8 180	10	1	G2	180	RA	
RB15S-2	10	1	180	SPS-I 30/8 180	10	1	G2	180	-		Stratos 30/8 180	10	1	G2	180	-	
RB15-2	10	1	180	SPS-I 30/8 180	10	1	G2	180	-		Stratos 30/8 180	10	1	G2	180	-	
RB2	10	1	170	HSP 15/4 130 SMO	6	1	G1	130	1x PAS15		Stratos Pico 15/4 130	6	1	G1	130	1x PAS15	
RB3	10	1	170	HSP 15/6 130 SMO	6	1	G1	130	1x PAS15		Stratos Pico 15/6 130	6	1	G1	130	1x PAS15	
REGULA0	10	1	170	HSP 15/4 130 SMO	6	1	G1	130	1x PAS15		Stratos Pico 15/4 130	6	1	G1	130	1x PAS15	
REGULA04	10	1	170	HSP 15/4 130 SMO	6	1	G1	130	1x PAS15		Stratos Pico 15/4 130	6	1	G1	130	1x PAS15	
REGULA1	10	1	170	HSP 15/4 130 SMO	6	1	G1	130	1x PAS15		Stratos Pico 15/4 130	6	1	G1	130	1x PAS15	
REGULA2	10	1	170	HSP 15/4 130 SMO	6	1	G1	130	1x PAS15		Stratos Pico 15/4 130	6	1	G1	130	1x PAS15	
REGULA3	10	1	170	HSP 15/6 130 SMO	6	1	G1	130	1x PAS15		Stratos Pico 15/6 130	6	1	G1	130	1x PAS15	
REGULA4	10	1	170	SPS-I 25/8 130	10	1	G1½	130	2x R07		Stratos 30/6 180	10	1	G2	180	RA	
RP30	10	3/1	190	SPS-I 25/8 180	10	1	G1½	180	2x R05	9	Stratos 25/4 180	10	1	G1½	180	2x R05	9
RZ25	10	3/1	190	SPS-I 25/8 180	10	1	G1½	180	2x R05	9	Stratos 25/4 180	10	1	G1½	180	2x R05	9
RZ30	10	3/1	190	SPS-I 25/8 180	10	1	G1½	180	2x R05	9	Stratos 25/4 180	10	1	G1½	180	2x R05	9
RZ35	10	3/1	210	SPS-I 30/8 180	10	1	G2	180	1x R10	9	Stratos 30/4 180	10	1	G2	180	1x R10	9
Yonos Pico 30/4 180	6	1	180	HSP 30/4 180 SMO	6	1	G2	180	-		Stratos Pico 30/4 180	6	1	G2	180	-	
Yonos Pico 30/6 180	6	1	180	HSP 30/6 180 SMO	6	1	G2	180	-		Stratos Pico 30/6 180	6	1	G2	180	-	
Yonos Pico 30/8 180	6	1	180	SPS-S 30/7.5 180SMO	6	1	G2	180	-								
Z25-0	10	3/1	190	SPS-I 25/8 180	10	1	G1½	180	2x R05	9	Stratos 25/4 180	10	1	G1½	180	2x R05	9
Z25-01	10	3/1	190	SPS-I 25/8 180	10	1	G1½	180	2x R05	9	Stratos 25/4 180	10	1	G1½	180	2x R05	9
Z25-1	10	3/1	190	SPS-I 25/8 180	10	1	G1½	180	2x R05	9	Stratos 25/4 180	10	1	G1½	180	2x R05	9
Z30-1	10	3/1	190	SPS-I 25/8 180	10	1	G1½	180	2x R05	9	Stratos 25/4 180	10	1	G1½	180	2x R05	9
Z30-2	10	3/1	190	SPS-I 25/8 180	10	1	G1½	180	2x R05	9	Stratos 25/4 180	10	1	G1½	180	2x R05	9
Z30-3	10	3/1	190	SPS-I 25/8 180	10	1	G1½	180	2x R05	9	Stratos 25/4 180	10	1	G1½	180	2x R05	9
Z30-4	10	3/1	190	SPS-I 25/8 180	10	1	G1½	180	2x R05	9	Stratos 25/4 180	10	1	G1½	180	2x R05	9
Z30-5	10	3/1	190	SPS-I 25/8 180	10	1	G1½	180	2x R05	9	Stratos 25/4 180	10	1	G1½	180	2x R05	9
Z32 SPEZ.	10	3/1	190	SPS-I 25/8 180	10	1	G1½	180	2x R05	9	Stratos 25/8 180	10	1	G1½	180	2x R05	9
Z32-1	10	3/1	190	SPS-I 25/8 180	10	1	G1½	180	2x R05	9	Stratos 25/8 180	10	1	G1½	180	2x R05	9
Z32-2	10	3/1	190	SPS-I 25/8 180	10	1	G1½	180	2x R05	9	Stratos 25/8 180	10	1	G1½	180	2x R05	9
Z32-3	10	3/1	190	SPS-I 25/8 180	10	1	G1½	180	2x R05	9	Stratos 25/8 180	10	1	G1½	180	2x R05	9
Z32-4	10	3/1	190	SPS-I 25/8 180	10	1	G1½	180	2x R05	9	Stratos 25/4 180	10	1	G1½	180	2x R05	9
Z32-5	10	3/1	190	SPS-I 25/8 180	10	1	G1½	180	2x R05	9	Stratos 25/4 180	10	1	G1½	180	2x R05	9
Z35-1	10	3/1	210	SPS-I 30/8 180	10	1	G2	180	1x R10	9	Stratos 30/4 180	10	1	G2	180	1x R10	9
Z35-2	10	3/1	210	SPS-I 30/8 180	10	1	G2	180	1x R10	9	Stratos 30/4 180	10	1	G2	180	1x R10	9
Z35-3	10	3/1	210	SPS-I 30/8 180	10	1	G2	180	1x R10	9	Stratos 30/4 180	10	1	G2	180	1x R10	9
Z36-1	10	3/1	210	SPS-I 30/8 180	10	1	G2	180	1x R10	9	Stratos 30/8 180	10	1	G2	180	1x R10	9
Z36-2	10	3/1	210	SPS-I 30/8 180	10	1	G2	180	1x R10	9	Stratos 30/8 180	10	1	G2	180	1x R10	9
Z36-3	10	3/1	210	SPS-I 30/8 180	10	1	G2	180	1x R10	9	Stratos 30/6 180	10	1	G2	180	1x R10	9
G 2¼ (Rp 1½)																	
BP40-1	10	3/1	190	SPS-S 25/6 180 SMO	6	1	G1½	180	2x R12	9	Stratos 25/4 180	10	1	G1½	180	2x R12	9
BP40-2	10	3/1	190	SPS-S 25/6 180 SMO	6	1	G1½	180	2x R12	9	Stratos 25/4 180	10	1	G1½	180	2x R12	9
BP40-3	10	3/1	190	SPS-S 25/6 180 SMO	6	1	G1½	180	2x R12	9	Stratos 25/4 180	10	1	G1½	180	2x R12	9
L324	10	3/1	190	SPS-S 25/6 180 SMO	6	1	G1½	180	2x R12	9	Stratos 25/4 180	10	1	G1½	180	2x R12	9
NBP40-1	10	3/1	190	SPS-S 25/6 180 SMO	6	1	G1½	180	2x R12	9	Stratos 25/4 180	10	1	G1½	180	2x R12	9
NBP40-1S	10	3	190	SPS-S 25/6 180 SMO	6	1	G1½	180	2x R12	9	Stratos 25/4 180	10	1	G1½	180	2x R12	9
NBP40-2	10	3/1	190	SPS-S 25/6 180 SMO	6	1	G1½	180	2x R12	9	Stratos 25/4 180	10	1	G1½	180	2x R12	9
NBP40-2S	10	3	190	SPS-S 25/6 180 SMO	6	1	G1½	180	2x R12	9	Stratos 25/4 180	10	1	G1½	180	2x R12	9
NBP40-3	10	3/1	190	SPS-S 25/6 180 SMO	6	1	G1½	180	2x R12	9	Stratos 25/4 180	10	1	G1½	180	2x R12	9
NRZ35 (1½")	10	3/1	210	SPS-I 30/8 180	10	1	G2	180	1x R10	9	Stratos 30/4 180	10	1	G2	180	1x R10	9
P40-1	10	3/1	190	SPS-S 25/6 180 SMO	6	1	G1½	180	2x R12	9	Stratos 25/4 180	10	1	G1½	180	2x R12	9
P40-2	10	3/1	190	SPS-S 25/6 180 SMO	6	1	G1½	180	2x R12	9	Stratos 25/4 180	10	1	G1½	180	2x R12	9
P40-3	10	3/1	190	SPS-S 25/6 180 SMO	6	1	G1½	180	2x R12	9	Stratos 25/4 180	10	1	G1½	180	2x R12	9
RZ35 (1½")	10	3/1	210	SPS-I 30/8 180	10	1	G2	180	1x R10	9	Stratos 30/4 180	10	1	G2	180	1x R10	9
Z35-1 (1½")	10	3/1	210	SPS-I 30/8 180	10	1	G2	180	1x R10	9	Stratos 30/4 180	10	1	G2	180	1x R10	9
Z35-2 (1½")	10	3/1	210	SPS-I 30/8 180	10	1	G2	180	1x R10	9	Stratos 30/4 180	10	1	G2	180	1x R10	9

Biral				Hoval													
Type	PN	M	L	Type	PN	M	G/DN	L	AGS	Rem.	Type	PN	M	G/DN	L	AGS	Rem.
DN 32																	
ModulA 32F-6 220 Red	6-16	1	220	SPS-I 30/8 180	10	1	G2	180	2x RF03	14	Stratos 32/10 220	6/10	1	32	220		14
ModulA 32F-12 220 Red	6-16	1	220	SPS-I 30/12 180	10	1	G2	180	2x RF03	14	Stratos 32/12 220	6/10	1	32	220		14
DN 40																	
A401	6/10	1	220	SPS-I 30/8 180	10	1	G2	180	1xR08 / 2xRF12	14	Stratos 40/8 220	6/10	1	40	220	-	14
A401-1	6/10	1	250	SPS-I 30/8 180	10	1	G2	180	2xRF12 / 1xF26	14	Stratos 40/8 220	6/10	1	40	220	1x F01	14
A402	6-16	1	220	SPS-I 30/12 180	10	1	G2	180	1xR08 / 2xRF12	14	Stratos 40/10 220	6/10	1	40	220	-	14
A402 V2	6-16	1	220	SPS-I 30/12 180	10	1	G2	180	1xR08 / 2xRF12	14	Stratos 40/10 220	6/10	1	40	220	-	14
A402-1	6-16	1	250	SPS-I 30/12 180	10	1	G2	180	2xRF12 / 1xF26	14	Stratos 40/12 250	6/10	1	40	250	-	14
A402-1 V2	6-16	1	250	SPS-I 30/12 180	10	1	G2	180	2xRF12 / 1xF26	14	Stratos 40/12 250	6/10	1	40	250	-	14
BZ40-1	6-16	3/1	220	SPS-I 40/12 220	10	1	40	220	-	9	Stratos 40/8 220	6/10	1	40	220	-	9
BZ40-2	6-16	3/1	220	SPS-I 40/12 220	10	1	40	220	-	9	Stratos 40/8 220	6/10	1	40	220	-	9
BZ40-3	6-16	3/1	220	SPS-I 40/12 220	10	1	40	220	-	9	Stratos 40/8 220	6/10	1	40	220	-	9
BZ43-1	6-16	3/1	220	SPS-I 40/12 220	10	1	40	220	-	9	Stratos 40/8 220	6/10	1	40	220	-	9
BZ43-2	6-16	3/1	220	SPS-I 40/12 220	10	1	40	220	-	9	Stratos 40/8 220	6/10	1	40	220	-	9
BZ43-3	6-16	3/1	220	SPS-I 40/12 220	10	1	40	220	-	9	Stratos 40/8 220	6/10	1	40	220	-	9
BZ43-4	6-16	3/1	220	SPS-I 40/12 220	10	1	40	220	-	9	Stratos 40/8 220	6/10	1	40	220	-	9
BZ45-1	6-16	3/1	250	SPS-I 40/12 220	10	1	40	220	1x F01	9	Stratos 40/8 220	6/10	1	40	220	1x F01	9
BZ45-2	6-16	3/1	250	SPS-I 40/12 220	10	1	40	220	1x F01	9	Stratos 40/8 220	6/10	1	40	220	1x F01	9
BZ45-3	6-16	3/1	250	SPS-I 40/12 220	10	1	40	220	1x F01	9	Stratos 40/8 220	6/10	1	40	220	1x F01	9
H402	6-16	3/1	220								Stratos 40/10 220	6/10	1	40	220	-	9
H402-1	6-16	3/1	250								Stratos 40/12 250	6/10	1	40	250	-	9
HX402	6-16	3/1	220								Stratos 40/10 220	6/10	1	40	220	-	9
HX402-1	6-16	3/1	250								Stratos 40/12 250	6/10	1	40	250	-	9
HXE402	6-16	3/1	220								Stratos 40/10 220	6/10	1	40	220	-	9
HXE402-1	6-16	3/1	250								Stratos 40/12 250	6/10	1	40	250	-	9
HXP402	6-16	1	220								Stratos 40/10 220	6/10	1	40	220	-	9
HXP402-1	6-16	1	250								Stratos 40/12 250	6/10	1	40	250	-	9
L401	6-16	3/1	220	SPS-I 30/8 180	10	1	G2	180	1xR08 / 2xRF12	9	Stratos 40/4 220	6/10	1	40	220	-	9
L402	6-16	3/1	220	SPS-I 30/8 180	10	1	G2	180	1xR08 / 2xRF12	9	Stratos 40/4 220	6/10	1	40	220	-	9
L403	6-16	3/1	250	SPS-I 30/8 180	10	1	G2	180	2xRF12 / 1xF26	9	Stratos 40/4 220	6/10	1	40	220	1x F01	9
LE403	6-16	1	250	SPS-I 30/8 180	10	1	G2	180	2xRF12 / 1xF26	14	Stratos 40/4 220	6/10	1	40	220	1x F01	14
LX401	6-16	3/1	220	SPS-I 30/8 180	10	1	G2	180	1xR08 / 2xRF12	9	Stratos 40/4 220	6/10	1	40	220	-	9
LX402	6-16	3/1	220	SPS-I 30/8 180	10	1	G2	180	1xR08 / 2xRF12	9	Stratos 40/4 220	6/10	1	40	220	-	9
LX403	6-16	3/1	250	SPS-I 30/8 180	10	1	G2	180	2xRF12 / 1xF26	9	Stratos 40/4 220	6/10	1	40	220	1x F01	9
LXE403	6-16	1	250	SPS-I 30/8 180	10	1	G2	180	2xRF12 / 1xF26		Stratos 40/4 220	6/10	1	40	220	1x F01	
LXP403	6-16	1	250	SPS-I 30/8 180	10	1	G2	180	2xRF12 / 1xF26		Stratos 40/4 220	6/10	1	40	220	1x F01	
ModulA 40-6 220 Red	6-16	1	220	SPS-I 30/12 180	10	1	G2	180	1xR08 / 2xRF12	14	Stratos 40/8 220	6/10	1	40	220	-	14
ModulA 40-8 220 Red	6-16	1	220								Stratos 40/8 220	6/10	1	40	220	-	14
ModulA 40-10 220 Red	6-16	1	220								Stratos 40/10 220	6/10	1	40	220	-	14
ModulA 40-12 250 Red	6-16	1	250								Stratos 40/12 250	6/10	1	40	250	-	14
ModulA 40-18 250 Red	6-16	1	250								Stratos 40/16 250	6/10	1	40	250	-	14
NBZ40-1	6-16	3/1	220	SPS-I 40/12 220	10	1	40	220	-	9	Stratos 40/8 220	6/10	1	40	220	-	9
NBZ40-1S	6-16	3	220	SPS-I 40/12 220	10	1	40	220	-	9	Stratos 40/8 220	6/10	1	40	220	-	9
NBZ40-2	6-16	3/1	220	SPS-I 40/12 220	10	1	40	220	-	9	Stratos 40/8 220	6/10	1	40	220	-	9
NBZ40-2S	6-16	3	220	SPS-I 40/12 220	10	1	40	220	-	9	Stratos 40/8 220	6/10	1	40	220	-	9
NBZ40-3	6-16	3/1	220	SPS-I 40/12 220	10	1	40	220	-	9	Stratos 40/8 220	6/10	1	40	220	-	9
NBZ40-3S	6-16	3	220	SPS-I 40/12 220	10	1	40	220	-	9	Stratos 40/8 220	6/10	1	40	220	-	9
NBZ45-1	6-16	3/1	250	SPS-I 40/12 220	10	1	40	220	1x F01	9	Stratos 40/8 220	6/10	1	40	220	1x F01	9
NBZ45-1S	6-16	3	250	SPS-I 40/12 220	10	1	40	220	1x F01	9	Stratos 40/8 220	6/10	1	40	220	1x F01	9
NBZ45-2	6-16	3/1	250	SPS-I 40/12 220	10	1	40	220	1x F01	9	Stratos 40/8 220	6/10	1	40	220	1x F01	9
NBZ45-3	6-16	3/1	250	SPS-I 40/12 220	10	1	40	220	1x F01	9	Stratos 40/8 220	6/10	1	40	220	1x F01	9
Z40-1	6-16	3/1	220	SPS-I 40/12 220	10	1	40	220	-	9	Stratos 40/8 220	6/10	1	40	220	-	9
Z40-2	6-16	3/1	220	SPS-I 40/12 220	10	1	40	220	-	9	Stratos 40/8 220	6/10	1	40	220	-	9
Z40-3	6-16	3/1	220	SPS-I 40/12 220	10	1	40	220	-	9	Stratos 40/8 220	6/10	1	40	220	-	9
Z40-4	6-16	3/1	220	SPS-I 40/12 220	10	1	40	220	-	9	Stratos 40/8 220	6/10	1	40	220	-	9
Z42-1	6-16	3/1	220								Stratos 40/10 220	6/10	1	40	220	-	9
Z42-2	6-16	3/1	220								Stratos 40/10 220	6/10	1	40	220	-	9
Z42-3	6-16	3/1	220								Stratos 40/10 220	6/10	1	40	220	-	9
Z42-4	6-16	3/1	220								Stratos 40/10 220	6/10	1	40	220	-	9
Z45-1	6-16	3/1	250	SPS-I 40/12 220	10	1	40	220	1x F01	9	Stratos 40/8 220	6/10	1	40	220	1x F01	9
Z45-2	6-16	3/1	250	SPS-I 40/12 220	10	1	40	220	1x F01	9	Stratos 40/8 220	6/10	1	40	220	1x F01	9
Z45-3	6-16	3/1	250	SPS-I 40/12 220	10	1	40	220	1x F01	9	Stratos 40/8 220	6/10	1	40	220	1x F01	9
DN 50																	
A500	6/10	1	220	SPS-I 30/12 180	10	1	G2	180	2x RF05	14	Stratos 50/12 280	6/10	1	50	280	RA	14
A501	6-16	1	270	SPS-I 30/12 180	10	1	G2	180	2xRF06 / 1xF03	14	Stratos 50/6 240	6/10	1	50	240	1x F04	14
A501 V2	6-16	1	270	SPS-I 30/12 180	10	1	G2	180	2xRF06 / 1xF03	14	Stratos 50/6 240	6/10	1	50	240	1x F04	14
A502	6-16	1	270								Stratos 50/12 280	6/10	1	50	280	RA	14
A502 V2	6-16	1	270								Stratos 50/12 280	6/10	1	50	280	RA	14
BP50-1	6-16	3/1	220								Stratos 50/12 280	6/10	1	50	280	RA	14
BP50-2	6-16	3/1	220								Stratos 50/12 280	6/10	1	50	280	RA	14
BP50-3	6-16	3/1	220								Stratos 50/12 280	6/10	1	50	280	RA	14
BP52-1	6-16	3/1	220								Stratos 50/6 240	6/10	1	50	240	RA	14
BP52-2	6-16	3/1	220								Stratos 50/12 280	6/10	1	50	280	RA	14
BP52-3	6-16	3/1	220								Stratos 50/12 280	6/10	1	50	280	RA	14
BZ50-1	6-16	3/1	270								Stratos 50/6 240	6/10	1	50	240	1x F04	14
BZ50-2	6-16	3/1	270								Stratos 50/6 240	6/10	1	50	240	1x F04	14
BZ50-3	6-16	3/1	270								Stratos 50/6 240	6/10	1	50	240	1x F04	14

Biral				Hoval													
Type	PN	M	L	Type	PN	M	G/DN	L	AGS	Rem.	Type	PN	M	G/DN	L	AGS	Rem.
BZ55-1	6-16	3/1	270								Stratos 50/6 240	6/10	1	50	240	1x F04	14
BZ55-2	6-16	3/1	270								Stratos 50/6 240	6/10	1	50	240	1x F04	14
BZ55-3	6-16	3/1	270								Stratos 50/6 240	6/10	1	50	240	1x F04	14
BZ56-1	6-16	3/1	270								Stratos 50/12 280	6/10	1	50	280	RA	14
BZ56-2	6-16	3/1	270								Stratos 50/12 280	6/10	1	50	280	RA	14
BZ56-3	6-16	3/1	270								Stratos 50/6 240	6/10	1	50	240	1x F04	14
H501	6-16	3/1	270								Stratos 50/12 280	6/10	1	50	280	RA	9
H501-1	6-16	3/1	280								Stratos 50/12 280	6/10	1	50	280	-	9
H502	6-16	3/1	270								Stratos 50/12 280	6/10	1	50	280	RA	9
H502-1	6-16	3/1	280								Stratos 50/12 280	6/10	1	50	280	-	9
HX501	6-16	3/1	270								Stratos 50/12 280	6/10	1	50	280	RA	9
HX501-1	6-16	3/1	280								Stratos 50/12 280	6/10	1	50	280	-	9
HX502	6-16	3/1	270								Stratos 50/12 280	6/10	1	50	280	RA	9
HX502-1	6-16	3/1	280								Stratos 50/12 280	6/10	1	50	280	-	9
HXC501	6-16	1	270								Stratos 50/12 280	6/10	1	50	280	RA	14
HXC501-1	6-16	1	280								Stratos 50/12 280	6/10	1	50	280	-	14
HXC501-1B	6-16	1	280								Stratos 50/12 280	6/10	1	50	280	-	14
HXC501B	6-16	1	270								Stratos 50/12 280	6/10	1	50	280	RA	14
HXP502	6-16	1	270								Stratos 50/12 280	6/10	1	50	280	RA	14
L501	6-16	3/1	220								Stratos 50/12 280	6/10	1	50	280	RA	9
L502	6-16	3/1	220								Stratos 50/12 280	6/10	1	50	280	RA	9
L503	6-16	3/1	270	SPS-I 30/12 180	10	1	G2	180	2xRF06 / 1xF03	9	Stratos 50/6 240	6/10	1	50	240	1x F04	9
L504	6-16	3/1	270								Stratos 50/6 240	6/10	1	50	240	1x F04	9
LE504	6-16	1	270								Stratos 50/12 280	6/10	1	50	280	RA	
LX502	6-16	3/1	220								Stratos 50/12 280	6/10	1	50	280	RA	9
LX503	6-16	3/1	270								Stratos 50/6 240	6/10	1	50	240	1x F04	9
LX504	6-16	3/1	270								Stratos 50/6 240	6/10	1	50	240	1x F04	9
LXE504	6-16	1	270								Stratos 50/6 240	6/10	1	50	240	1x F04	
LXP504	6-16	1	270								Stratos 50/6 240	6/10	1	50	240	1x F04	
ModulA 50-6 240 Red	6-16	1	240	SPS-I 30/12 180	10	1	G2	180	2xRF05 / 1xF03	14	Stratos 50/6 240	6/10	1	50	240	-	14
ModulA 50-6 270 Red	6-16	1	270	SPS-I 30/12 180	10	1	G2	180	2xRF06 / 1xF03	14	Stratos 50/6 240	6/10	1	50	240	1x F04	14
ModulA 50-8 240 Red	6-16	1	240								Stratos 50/8 240	6/10	1	50	240	-	14
ModulA 50-11 220 Red	6-16	1	220								Stratos 50/12 280	6/10	1	50	280	RA	14
ModulA 50-12 270 Red	6-16	1	270								Stratos 50/12 280	6/10	1	50	280	RA	14
ModulA 50-18 270 Red	6-16	1	270								Stratos 50/16 340	6/10	1	50	340	RA	14
NBP50-1	6-16	3/1	220								Stratos 50/12 280	6/10	1	50	280	RA	14
NBP50-1S	6-16	3	220								Stratos 50/12 280	6/10	1	50	280	RA	14
NBP50-2	6-16	3/1	220								Stratos 50/12 280	6/10	1	50	280	RA	14
NBP50-2S	6-16	3	220								Stratos 50/12 280	6/10	1	50	280	RA	14
NBP50-3	6-16	3/1	220								Stratos 50/12 280	6/10	1	50	280	RA	14
NBP50-3S	6-16	3	220								Stratos 50/12 280	6/10	1	50	280	RA	14
NBZ50-1	6-16	3/1	270	SPS-I 30/12 180	10	1	G2	180	2xRF06 / 1xF03	14	Stratos 50/6 240	6/10	1	50	240	1x F04	14
NBZ50-1S	6-16	3	270	SPS-I 30/12 180	10	1	G2	180	2xRF06 / 1xF03	14	Stratos 50/6 240	6/10	1	50	240	1x F04	14
NBZ50-2	6-16	3/1	270	SPS-I 30/12 180	10	1	G2	180	2xRF06 / 1xF03	14	Stratos 50/6 240	6/10	1	50	240	1x F04	14
NBZ50-2S	6-16	3	270	SPS-I 30/12 180	10	1	G2	180	2xRF06 / 1xF03	14	Stratos 50/6 240	6/10	1	50	240	1x F04	14
NBZ50-3	6-16	3/1	270	SPS-I 30/12 180	10	1	G2	180	2xRF06 / 1xF03	14	Stratos 50/6 240	6/10	1	50	240	1x F04	14
NBZ55-1	6-16	3/1	270	SPS-I 30/12 180	10	1	G2	180	2xRF06 / 1xF03	14	Stratos 50/6 240	6/10	1	50	240	1x F04	14
NBZ55-1S	6-16	3	270	SPS-I 30/12 180	10	1	G2	180	2xRF06 / 1xF03	14	Stratos 50/6 240	6/10	1	50	240	1x F04	14
NBZ55-2	6-16	3/1	270	SPS-I 30/12 180	10	1	G2	180	2xRF06 / 1xF03	14	Stratos 50/6 240	6/10	1	50	240	1x F04	14
NBZ55-3	6-16	3/1	270	SPS-I 30/12 180	10	1	G2	180	2xRF06 / 1xF03	14	Stratos 50/6 240	6/10	1	50	240	1x F04	14
P50-1	6-16	3/1	220								Stratos 50/12 280	6/10	1	50	280	RA	14
P50-2	6-16	3/1	220								Stratos 50/12 280	6/10	1	50	280	RA	14
P50-3	6-16	3/1	220								Stratos 50/12 280	6/10	1	50	280	RA	14
Z50-1	6-16	3/1	270	SPS-I 30/12 180	10	1	G2	180	2xRF06 / 1xF03	14	Stratos 50/6 240	6/10	1	50	240	1x F04	14
Z50-2	6-16	3/1	270	SPS-I 30/12 180	10	1	G2	180	2xRF06 / 1xF03	14	Stratos 50/6 240	6/10	1	50	240	1x F04	14
Z50-3	6-16	3/1	270								Stratos 50/12 280	6/10	1	50	280	RA	14
Z50-4	6-16	3/1	270								Stratos 50/12 280	6/10	1	50	280	RA	14
Z55-1	6-16	3/1	300								Stratos 50/6 240	6/10	1	50	240	2x F04	14
Z55-2	6-16	3/1	300								Stratos 50/6 240	6/10	1	50	240	2x F04	14
Z55-3	6-16	3/1	300								Stratos 50/6 240	6/10	1	50	240	2x F04	14
DN 65																	
A651	6-16	1	340								Stratos 65/9 280	6/10	1	65	280	2x F11	14
A651 V2	6-16	1	340								Stratos 65/9 280	6/10	1	65	280	2x F11	14
A651-1 V2	6-16	1	270								Stratos 65/9 280	6/10	1	65	280	RA	14
A652	6-16	1	340								Stratos 65/12 340	6/10	1	65	340	-	14
A652 V2	6-16	1	340								Stratos 65/12 340	6/10	1	65	340	-	14
BP65-1	6-16	3/1	270								Stratos 65/9 280	6/10	1	65	280	RA	14
BP65-2	6-16	3/1	270								Stratos 65/9 280	6/10	1	65	280	RA	14
BP65-3	6-16	3/1	270								Stratos 65/9 280	6/10	1	65	280	RA	9
BZ58-1	6-16	3/1	300								Stratos 65/9 280	6/10	1	65	280	1x F10	9
BZ58-2	6-16	3/1	300								Stratos 65/9 280	6/10	1	65	280	1x F10	9
BZ58-3	6-16	3/1	300								Stratos 65/9 280	6/10	1	65	280	1x F10	9
BZ60-1	6-16	3/1	340								Stratos 65/9 280	6/10	1	65	280	2x F11	9
BZ60-2	6-16	3/1	340								Stratos 65/9 280	6/10	1	65	280	2x F11	9
BZ60-3	6-16	3/1	340								Stratos 65/9 280	6/10	1	65	280	2x F11	9
BZ65-1	6-16	3/1	340								Stratos 65/12 340	6/10	1	65	340	-	9
BZ65-2	6-16	3/1	340								Stratos 65/12 340	6/10	1	65	340	-	9
BZ65-3	6-16	3/1	340								Stratos 65/9 280	6/10	1	65	280	2x F11	9
H652	6-16	3/1	340								Stratos 65/12 340	6/10	1	65	340	-	9
HX652	6-16	3/1	340								Stratos 65/12 340	6/10	1	65	340	-	9

Biral				Hoval													
Type	PN	M	L	Type	PN	M	G/DN	L	AGS	Rem.	Type	PN	M	G/DN	L	AGS	Rem.
HXP652	6-16	1	340								Stratos 65/12 340	6/10	1	65	340	-	14
L651	6-16	3/1	270								Stratos 65/9 280	6/10	1	65	280	RA	9
L652	6-16	3/1	270								Stratos 65/9 280	6/10	1	65	280	RA	9
L653	6-16	3/1	300								Stratos 65/9 280	6/10	1	65	280	1x F10	9
L654	6-16	3/1	340								Stratos 65/9 280	6/10	1	65	280	2x F11	9
L655	6-16	3/1	340								Stratos 65/12 340	6/10	1	65	340	-	9
LC650	6-16	1	340								Stratos 65/9 280	6/10	1	65	280	2x F11	
LX652	6-16	3/1	270								Stratos 65/9 280	6/10	1	65	280	RA	9
LX653	6-16	3/1	300								Stratos 65/9 280	6/10	1	65	280	1x F10	9
LX654	6-16	3/1	340								Stratos 65/9 280	6/10	1	65	280	2x F11	9
LX655	6-16	3/1	340								Stratos 65/12 340	6/10	1	65	340	-	9
LXC655	6-16	1	340								Stratos 65/9 280	6/10	1	65	280	2x F11	
LXP654	6-16	1	340								Stratos 65/9 280	6/10	1	65	280	2x F11	
ModulA 65-8 270 Red	6-16	1	270								Stratos 65/9 280	6/10	1	65	280	RA	14
ModulA 65-8 340 Red	6-16	1	340								Stratos 65/9 280	6/10	1	65	280	2x F11	14
ModulA 65-12 340 Red	6-16	1	340								Stratos 65/12 340	6/10	1	65	340	-	14
ModulA 65-15 340 Red	6-16	1	340								Stratos 65/16 340	6/10	1	65	340	-	14
NBP65-1	6-16	3/1	270								Stratos 65/9 280	6/10	1	65	280	RA	9
NBP65-1S	6-16	3	270								Stratos 65/9 280	6/10	1	65	280	RA	9
NBP65-2	6-16	3/1	270								Stratos 65/9 280	6/10	1	65	280	RA	9
NBP65-2S	6-16	3	270								Stratos 65/9 280	6/10	1	65	280	RA	9
NBP65-3	6-16	3/1	270								Stratos 65/9 280	6/10	1	65	280	RA	9
NBP65-3S	6-16	3	270								Stratos 65/9 280	6/10	1	65	280	RA	9
NBZ58-1	6-16	3/1	300								Stratos 65/9 280	6/10	1	65	280	1x F10	9
NBZ58-1S	6-16	3	300								Stratos 65/9 280	6/10	1	65	280	1x F10	9
NBZ58-2	6-16	3/1	300								Stratos 65/9 280	6/10	1	65	280	1x F10	9
NBZ58-2S	6-16	3	300								Stratos 65/9 280	6/10	1	65	280	1x F10	9
NBZ58-3	6-16	3/1	300								Stratos 65/9 280	6/10	1	65	280	1x F10	9
NBZ60-1	6-16	3/1	340								Stratos 65/9 280	6/10	1	65	280	2x F11	9
NBZ60-1S	6-16	3	340								Stratos 65/9 280	6/10	1	65	280	2x F11	9
NBZ60-2	6-16	3/1	340								Stratos 65/9 280	6/10	1	65	280	2x F11	9
NBZ60-2S	6-16	3	340								Stratos 65/9 280	6/10	1	65	280	2x F11	9
NBZ60-3	6-16	3/1	340								Stratos 65/9 280	6/10	1	65	280	2x F11	9
NBZ65-1	6-16	3/1	340								Stratos 65/12 340	6/10	1	65	340	-	9
NBZ65-1S	6-16	3	340								Stratos 65/12 340	6/10	1	65	340	-	9
NBZ65-2	6-16	3/1	340								Stratos 65/12 340	6/10	1	65	340	-	9
NBZ65-3	6-16	3/1	340								Stratos 65/9 280	6/10	1	65	280	2x F11	9
P65-1	6-16	3/1	270								Stratos 65/9 280	6/10	1	65	280	RA	9
P65-2	6-16	3/1	270								Stratos 65/9 280	6/10	1	65	280	RA	9
P65-3	6-16	3/1	270								Stratos 65/9 280	6/10	1	65	280	RA	9
P65-4	6-16	3/1	270								Stratos 65/9 280	6/10	1	65	280	RA	9
Z58-1	6-16	3/1	300								Stratos 65/9 280	6/10	1	65	280	1x F10	9
Z58-2	6-16	3/1	300								Stratos 65/9 280	6/10	1	65	280	1x F10	9
Z58-3	6-16	3/1	300								Stratos 65/9 280	6/10	1	65	280	1x F10	9
Z60-1	6-16	3/1	340								Stratos 65/9 280	6/10	1	65	280	2x F11	9
Z60-2	6-16	3/1	340								Stratos 65/9 280	6/10	1	65	280	2x F11	9
Z60-3	6-16	3/1	340								Stratos 65/9 280	6/10	1	65	280	2x F11	9
Z65-1	6-16	3/1	370								Stratos 65/12 340	6/10	1	65	340	1x F11	9
Z65-2	6-16	3/1	370								Stratos 65/12 340	6/10	1	65	340	1x F11	9
Z65-3	6-16	3/1	370								Stratos 65/9 280	6/10	1	65	280	RA	9
Z65-4	6-16	3/1	370								Stratos 65/9 280	6/10	1	65	280	RA	9
DN 80																	
A801 V2	6-16	1	360	Stratos 80/12 360	6	1	PN6	360	-	14	Stratos 80/12 360	10	1	PN10	360	-	14
A802	6/10	1	360	Stratos 80/12 360	6	1	PN6	360	-	14	Stratos 80/12 360	10	1	PN10	360	-	14
BP-80-1	6-16	3/1	370	Stratos 80/12 360	6	1	PN6	360	1x F16	9	Stratos 80/12 360	10	1	PN10	360	RA	9
BP-80-2	6-16	3/1	370	Stratos 80/12 360	6	1	PN6	360	1x F16	9	Stratos 80/12 360	10	1	PN10	360	RA	9
BP-80-3	6-16	3/1	370	Stratos 80/12 360	6	1	PN6	360	1x F16	9	Stratos 80/12 360	10	1	PN10	360	RA	9
BZ78-1	6-16	3/1	370	Stratos 80/12 360	6	1	PN6	360	1x F16	9	Stratos 80/12 360	10	1	PN10	360	RA	9
BZ78-2	6-16	3/1	370	Stratos 80/12 360	6	1	PN6	360	1x F16	9	Stratos 80/12 360	10	1	PN10	360	RA	9
BZ78-3	6-16	3/1	370	Stratos 80/12 360	6	1	PN6	360	1x F16	9	Stratos 80/12 360	10	1	PN10	360	RA	9
BZ80-1	6-16	3/1	400	Stratos 80/12 360	6	1	PN6	360	1x F18	9	Stratos 80/12 360	10	1	PN10	360	RA	9
BZ80-2	6-16	3/1	400	Stratos 80/12 360	6	1	PN6	360	1x F18	9	Stratos 80/12 360	10	1	PN10	360	RA	9
BZ80-3	6-16	3/1	400	Stratos 80/12 360	6	1	PN6	360	1x F18	9	Stratos 80/12 360	10	1	PN10	360	RA	9
BZ85-1	6-16	3/1	400	Stratos 80/12 360	6	1	PN6	360	1x F18	9	Stratos 80/12 360	10	1	PN10	360	RA	9
BZ85-2	6-16	3/1	400	Stratos 80/12 360	6	1	PN6	360	1x F18	9	Stratos 80/12 360	10	1	PN10	360	RA	9
BZ85-3	6-16	3/1	400	Stratos 80/12 360	6	1	PN6	360	1x F18	9	Stratos 80/12 360	10	1	PN10	360	RA	9
H802	6-16	3/1	360	Stratos 80/12 360	6	1	PN6	360	-	14	Stratos 80/12 360	10	1	PN10	360	-	9
HX802	6-16	3/1	360	Stratos 80/12 360	6	1	PN6	360	-	14	Stratos 80/12 360	10	1	PN10	360	-	9
L801	6-16	3/1	370	Stratos 80/12 360	6	1	PN6	360	1x F16	9	Stratos 80/12 360	10	1	PN10	360	RA	9
L802	6-16	3/1	370	Stratos 80/12 360	6	1	PN6	360	1x F16	9	Stratos 80/12 360	10	1	PN10	360	RA	9
L803	6-16	3/1	370	Stratos 80/12 360	6	1	PN6	360	1x F16	9	Stratos 80/12 360	10	1	PN10	360	RA	9
L804	6-16	3/1	400	Stratos 80/12 360	6	1	PN6	360	1x F18	9	Stratos 80/12 360	10	1	PN10	360	RA	9
L805	6-16	3/1	400	Stratos 80/12 360	6	1	PN6	360	1x F18	9	Stratos 80/12 360	10	1	PN10	360	RA	9
LC800	6-16	3/1	400	Stratos 80/12 360	6	1	PN6	360	1x F18	9	Stratos 80/12 360	10	1	PN10	360	RA	9
LC805	6-16	3	400	Stratos 80/12 360	6	1	PN6	360	1x F18	9	Stratos 80/12 360	10	1	PN10	360	RA	9
LX802	6-16	3/1	370	Stratos 80/12 360	6	1	PN6	360	1x F16	9	Stratos 80/12 360	10	1	PN10	360	RA	9
LX803	6-16	3/1	370	Stratos 80/12 360	6	1	PN6	360	1x F16	9	Stratos 80/12 360	10	1	PN10	360	RA	9
ModulA 80-8 360 Red	6	1	360	Stratos 80/12 360	6	1	PN6	360	-	14							
ModulA 80-8 360 Red	6-16	1	360								Stratos 80/12 360	10	1	PN10	360	-	14

Biral				Hoval													
Type	PN	M	L	Type	PN	M	G/DN	L	AGS	Rem.	Type	PN	M	G/DN	L	AGS	Rem.
ModulA 80-12 360 Red	6	1	360	Stratos 80/12 360	6	1	PN6	360	-	14							
ModulA 80-12 360 Red	6-16	1	360								Stratos 80/12 360	10	1	PN10	360	-	14
NBP80-1	6-16	3/1	370	Stratos 80/12 360	6	1	PN6	360	1x F16	9	Stratos 80/12 360	10	1	PN10	360	RA	9
NBP80-1S	6-16	3	370	Stratos 80/12 360	6	1	PN6	360	1x F16	9	Stratos 80/12 360	10	1	PN10	360	RA	9
NBP80-2	6-16	3/1	370	Stratos 80/12 360	6	1	PN6	360	1x F16	9	Stratos 80/12 360	10	1	PN10	360	RA	9
NBP80-2S	6-16	3	370	Stratos 80/12 360	6	1	PN6	360	1x F16	9	Stratos 80/12 360	10	1	PN10	360	RA	9
NBP80-3	6-16	3/1	370	Stratos 80/12 360	6	1	PN6	360	1x F16	9	Stratos 80/12 360	10	1	PN10	360	RA	9
NBP80-3S	6-16	3	370	Stratos 80/12 360	6	1	PN6	360	1x F16	9	Stratos 80/12 360	10	1	PN10	360	RA	9
NBZ78-1	6-16	3/1	370	Stratos 80/12 360	6	1	PN6	360	1x F16	9	Stratos 80/12 360	10	1	PN10	360	RA	9
NBZ78-1S	6-16	3	370	Stratos 80/12 360	6	1	PN6	360	1x F16	9	Stratos 80/12 360	10	1	PN10	360	RA	9
NBZ78-2	6-16	3/1	370	Stratos 80/12 360	6	1	PN6	360	1x F16	9	Stratos 80/12 360	10	1	PN10	360	RA	9
NBZ78-3	6-16	3/1	370	Stratos 80/12 360	6	1	PN6	360	1x F16	9	Stratos 80/12 360	10	1	PN10	360	RA	9
NBZ80-1	6-16	3/1	400	Stratos 80/12 360	6	1	PN6	360	1x F18	9	Stratos 80/12 360	10	1	PN10	360	RA	9
NBZ80-1S	6-16	3	400	Stratos 80/12 360	6	1	PN6	360	1x F18	9	Stratos 80/12 360	10	1	PN10	360	RA	9
NBZ80-2	6-16	3/1	400	Stratos 80/12 360	6	1	PN6	360	1x F18	9	Stratos 80/12 360	10	1	PN10	360	RA	9
NBZ80-3	6-16	3/1	400	Stratos 80/12 360	6	1	PN6	360	1x F18	9	Stratos 80/12 360	10	1	PN10	360	RA	9
NBZ85-1	6-16	3/1	400	Stratos 80/12 360	6	1	PN6	360	1x F18	9	Stratos 80/12 360	10	1	PN10	360	RA	9
NBZ85-1S	6-16	3	400	Stratos 80/12 360	6	1	PN6	360	1x F18	9	Stratos 80/12 360	10	1	PN10	360	RA	9
NBZ85-2	6-16	3/1	400	Stratos 80/12 360	6	1	PN6	360	1x F18	9	Stratos 80/12 360	10	1	PN10	360	RA	9
NBZ85-2S	6-16	3	400	Stratos 80/12 360	6	1	PN6	360	1x F18	9	Stratos 80/12 360	10	1	PN10	360	RA	9
NBZ85-3	6-16	3/1	400	Stratos 80/12 360	6	1	PN6	360	1x F18	9	Stratos 80/12 360	10	1	PN10	360	RA	9
P80-1	6-16	3/1	370	Stratos 80/12 360	6	1	PN6	360	1x F16	9	Stratos 80/12 360	10	1	PN10	360	RA	9
P80-2	6-16	3/1	370	Stratos 80/12 360	6	1	PN6	360	1x F16	9	Stratos 80/12 360	10	1	PN10	360	RA	9
P80-3	6-16	3/1	370	Stratos 80/12 360	6	1	PN6	360	1x F16	9	Stratos 80/12 360	10	1	PN10	360	RA	9
Z78-1	6-16	3/1	370	Stratos 80/12 360	6	1	PN6	360	1x F16	9	Stratos 80/12 360	10	1	PN10	360	RA	9
Z78-2	6-16	3/1	370	Stratos 80/12 360	6	1	PN6	360	1x F16	9	Stratos 80/12 360	10	1	PN10	360	RA	9
Z78-3	6-16	3/1	370	Stratos 80/12 360	6	1	PN6	360	1x F16	9	Stratos 80/12 360	10	1	PN10	360	RA	9
Z80-1	6-16	3/1	400	Stratos 80/12 360	6	1	PN6	360	1x F18	9	Stratos 80/12 360	10	1	PN10	360	RA	9
Z80-2	6-16	3/1	400	Stratos 80/12 360	6	1	PN6	360	1x F18	9	Stratos 80/12 360	10	1	PN10	360	RA	9
Z80-2	6-16	3/1	400	Stratos 80/12 360	6	1	PN6	360	1x F18	9	Stratos 80/12 360	10	1	PN10	360	RA	9
Z80-3	6-16	3/1	400	Stratos 80/12 360	6	1	PN6	360	1x F18	9	Stratos 80/12 360	10	1	PN10	360	RA	9
Z80-3	6-16	3/1	400	Stratos 80/12 360	6	1	PN6	360	1x F18	9	Stratos 80/12 360	10	1	PN10	360	RA	9
Z85-1	6-16	3/1	410	Stratos 80/12 360	6	1	PN6	360	2x F30	9	Stratos 80/12 360	10	1	PN10	360	2x F30	9
Z85-2	6-16	3/1	410	Stratos 80/12 360	6	1	PN6	360	2x F30	9	Stratos 80/12 360	10	1	PN10	360	2x F30	9
Z85-3	6-16	3/1	410	Stratos 80/12 360	6	1	PN6	360	2x F30	9	Stratos 80/12 360	10	1	PN10	360	2x F30	9
DN 100																	
A1002	6/10	1	450	Stratos 100/12 360	6	1	PN6	360	1x F34 / 1x F35	14	Stratos 100/12 360	10	1	PN10	360	1x F34 / 1x F35	14
BP100-1	6-16	3	450	Stratos 100/12 360	6	1	PN6	360	1x F34 / 1x F35	9	Stratos 100/12 360	10	1	PN10	360	1x F34 / 1x F35	9
BP100-2	6-16	3	450	Stratos 100/12 360	6	1	PN6	360	1x F34 / 1x F35	9	Stratos 100/12 360	10	1	PN10	360	1x F34 / 1x F35	9
BP100-3	6-16	3	450	Stratos 100/12 360	6	1	PN6	360	1x F34 / 1x F35	9	Stratos 100/12 360	10	1	PN10	360	1x F34 / 1x F35	9
BZ100-1	6-16	3	450														
BZ100-2	6-16	3	450	Stratos 100/12 360	6	1	PN6	360	1x F34 / 1x F35	9	Stratos 100/12 360	10	1	PN10	360	1x F34 / 1x F35	9
BZ100-3	6-16	3	450	Stratos 100/12 360	6	1	PN6	360	1x F34 / 1x F35	9	Stratos 100/12 360	10	1	PN10	360	1x F34 / 1x F35	9
BZ100-4	6-16	3	450	Stratos 100/12 360	6	1	PN6	360	1x F34 / 1x F35	9	Stratos 100/12 360	10	1	PN10	360	1x F34 / 1x F35	9
L1001	6-16	3	450	Stratos 100/12 360	6	1	PN6	360	1x F34 / 1x F35	9	Stratos 100/12 360	10	1	PN10	360	1x F34 / 1x F35	9
L1002	6-16	3	450	Stratos 100/12 360	6	1	PN6	360	1x F34 / 1x F35	9	Stratos 100/12 360	10	1	PN10	360	1x F34 / 1x F35	9
L1003	6-16	3	450	Stratos 100/12 360	6	1	PN6	360	1x F34 / 1x F35	9	Stratos 100/12 360	10	1	PN10	360	1x F34 / 1x F35	9
L1004	6-16	3	450														
LC1003	6-16	3	450	Stratos 100/12 360	6	1	PN6	360	1x F34 / 1x F35	9	Stratos 100/12 360	10	1	PN10	360	1x F34 / 1x F35	9
ModulA 100-12 450 Red	6	1	450	Stratos 100/12 360	6	1	PN6	360	1x F34 / 1x F35	14							
ModulA 100-12 450 Red	6-16	1	450								Stratos 100/12 360	10	1	PN10	360	1x F34 / 1x F35	14
NBP100-1	6-16	3	450	Stratos 100/12 360	6	1	PN6	360	1x F34 / 1x F35	9	Stratos 100/12 360	10	1	PN10	360	1x F34 / 1x F35	9
NBP100-1S	6-16	3	450	Stratos 100/12 360	6	1	PN6	360	1x F34 / 1x F35	9	Stratos 100/12 360	10	1	PN10	360	1x F34 / 1x F35	9
NBP100-2	6-16	3	450	Stratos 100/12 360	6	1	PN6	360	1x F34 / 1x F35	9	Stratos 100/12 360	10	1	PN10	360	1x F34 / 1x F35	9
NBP100-2S	6-16	3	450	Stratos 100/12 360	6	1	PN6	360	1x F34 / 1x F35	9	Stratos 100/12 360	10	1	PN10	360	1x F34 / 1x F35	9
NBP100-3	6-16	3	450	Stratos 100/12 360	6	1	PN6	360	1x F34 / 1x F35	9	Stratos 100/12 360	10	1	PN10	360	1x F34 / 1x F35	9
NBP100-3S	6-16	3	450	Stratos 100/12 360	6	1	PN6	360	1x F34 / 1x F35	9	Stratos 100/12 360	10	1	PN10	360	1x F34 / 1x F35	9
NBZ100-1	6-16	3	450														
NBZ100-1S	6-16	3	450														
NBZ100-2	6-16	3	450	Stratos 100/12 360	6	1	PN6	360	1x F34 / 1x F35	9	Stratos 100/12 360	10	1	PN10	360	1x F34 / 1x F35	9
NBZ100-2S	6-16	3	450	Stratos 100/12 360	6	1	PN6	360	1x F34 / 1x F35	9	Stratos 100/12 360	10	1	PN10	360	1x F34 / 1x F35	9
NBZ100-3	6-16	3	450	Stratos 100/12 360	6	1	PN6	360	1x F34 / 1x F35	9	Stratos 100/12 360	10	1	PN10	360	1x F34 / 1x F35	9
NBZ100-3S	6-16	3	450	Stratos 100/12 360	6	1	PN6	360	1x F34 / 1x F35	9	Stratos 100/12 360	10	1	PN10	360	1x F34 / 1x F35	9
NBZ100-4	6-16	3	450	Stratos 100/12 360	6	1	PN6	360	1x F34 / 1x F35	9	Stratos 100/12 360	10	1	PN10	360	1x F34 / 1x F35	9
NBZ100-4S	6-16	3	450	Stratos 100/12 360	6	1	PN6	360	1x F34 / 1x F35	9	Stratos 100/12 360	10	1	PN10	360	1x F34 / 1x F35	9
P100-1	6-16	3	450	Stratos 100/12 360	6	1	PN6	360	1x F34 / 1x F35	9	Stratos 100/12 360	10	1	PN10	360	1x F34 / 1x F35	9
P100-2	6-16	3	450	Stratos 100/12 360	6	1	PN6	360	1x F34 / 1x F35	9	Stratos 100/12 360	10	1	PN10	360	1x F34 / 1x F35	9
P100-3	6-16	3	450	Stratos 100/12 360	6	1	PN6	360	1x F34 / 1x F35	9	Stratos 100/12 360	10	1	PN10	360	1x F34 / 1x F35	9
P100-4	6-16	3	450	Stratos 100/12 360	6	1	PN6	360	1x F34 / 1x F35	9	Stratos 100/12 360	10	1	PN10	360	1x F34 / 1x F35	9
Z100-1	6-16	3	450														
Z100-2	6-16	3	450	Stratos 100/12 360	6	1	PN6	360	1x F34 / 1x F35	9	Stratos 100/12 360	10	1	PN10	360	1x F34 / 1x F35	9
Z100-3	6-16	3	450	Stratos 100/12 360	6	1	PN6	360	1x F34 / 1x F35	9	Stratos 100/12 360	10	1	PN10	360	1x F34 / 1x F35	9
Z100-4	6-16	3	450	Stratos 100/12 360	6	1	PN6	360	1x F34 / 1x F35	9	Stratos 100/12 360	10	1	PN10	360	1x F34 / 1x F35	9
Z100-5	6-16	3	450	Stratos 100/12 360	6	1	PN6	360	1x F34 / 1x F35	9	Stratos 100/12 360	10	1	PN10	360	1x F34 / 1x F35	9

Biral				Hoval Highly efficient							Hoval Premium highly efficient						
Type	PN	M	L	Type	PN	M	G/DN	L	AGS	Rem.	Type	PN	M	G/DN	L	AGS	Rem.
Heating circulation double pumps																	
G 2 (Rp 1¼)																	
AD14-2	10	1	180								Stratos-D 32/8 220	6/10	1	32	220	RA	14
AD15-2	10	1	180								Stratos-D 32/8 220	6/10	1	32	220	RA	14
HD321	10	3	190								Stratos-D 32/8 220	6/10	1	32	220	RA	9
HD321	10	1	190								Stratos-D 32/8 220	6/10	1	32	220	RA	
HD321-2	10	3/1	180								Stratos-D 32/8 220	6/10	1	32	220	RA	9
HD322	10	3/1	190								Stratos-D 32/8 220	6/10	1	32	220	RA	9
HD322-2	10	3/1	180								Stratos-D 32/8 220	6/10	1	32	220	RA	9
HXD301	10	3	180								Stratos-D 32/8 220	6/10	1	32	220	RA	9
HXD301	10	3	190								Stratos-D 32/8 220	6/10	1	32	220	RA	9
HXD302	10	3	180								Stratos-D 32/8 220	6/10	1	32	220	RA	9
HXD302	10	3	190								Stratos-D 32/8 220	6/10	1	32	220	RA	9
HXD321	10	3	190								Stratos-D 32/8 220	6/10	1	32	220	RA	9
HXD321	10	1	190								Stratos-D 32/8 220	6/10	1	32	220	RA	
HXD321-2	10	3	180								Stratos-D 32/8 220	6/10	1	32	220	RA	9
HXD321-2	10	1	180								Stratos-D 32/8 220	6/10	1	32	220	RA	
HXD322	10	3/1	190								Stratos-D 32/8 220	6/10	1	32	220	RA	9
HXD322-2	10	3/1	180								Stratos-D 32/8 220	6/10	1	32	220	RA	9
LD321	10	3/1	190								Stratos-D 32/8 220	6/10	1	32	220	RA	9
LD322	10	3/1	190								Stratos-D 32/8 220	6/10	1	32	220	RA	9
LD323	10	3/1	190								Stratos-D 32/8 220	6/10	1	32	220	RA	9
LXD321	10	3/1	190								Stratos-D 32/8 220	6/10	1	32	220	RA	9
LXD322	10	3/1	190								Stratos-D 32/8 220	6/10	1	32	220	RA	9
LXD323	10	3/1	190								Stratos-D 32/8 220	6/10	1	32	220	RA	9
ModulA-D32-6 180 Red	10	1	180								Stratos-D 32/8 220	6/10	1	32	220	RA	14
ModulA-D32-8 180 Red	10	1	180								Stratos-D 32/8 220	6/10	1	32	220	RA	14
NZRZ 25	10	3/1	190								Stratos-D 32/8 220	6/10	1	32	220	RA	9
NZRZ25S	10	3	190								Stratos-D 32/8 220	6/10	1	32	220	RA	9
NZRZ30	10	3/1	190								Stratos-D 32/8 220	6/10	1	32	220	RA	9
NZRZ30S	10	3	190								Stratos-D 32/8 220	6/10	1	32	220	RA	9
NZRZ35	10	3/1	210								Stratos-D 32/8 220	6/10	1	32	220	RA	9
NZRZ35S	10	3	210								Stratos-D 32/8 220	6/10	1	32	220	RA	9
ZRZ25	10	3/1	190								Stratos-D 32/8 220	6/10	1	32	220	RA	9
ZRZ30	10	3/1	190								Stratos-D 32/8 220	6/10	1	32	220	RA	9
ZRZ35	10	3/1	210								Stratos-D 32/8 220	6/10	1	32	220	RA	9
DN 32																	
ModulA-D 32F-6 220 Red	6	1	220								Stratos-D 32/8 220	6/10	1	32	220	-	14
ModulA-D 32F-12 220 Red	6-16	1	220								Stratos-D 32/12 220	6/10	1	32	220	-	14
DN 40																	
AD401	6/10	1	220								Stratos-D 40/8 220	6/10	1	40	220	-	14
AD402-1	6-16	1	250								Stratos-D 40/12 250	6/10	1	40	250	-	14
AD402-1 V2	6-16	1	250								Stratos-D 40/12 250	6/10	1	40	250	-	14
HD402-1	6-16	3/1	250								Stratos-D 40/12 250	6/10	1	40	250	-	9
HXD402-1	6-16	3/1	250								Stratos-D 40/12 250	6/10	1	40	250	-	9
HXED402-1	6-16	1	250								Stratos-D 40/12 250	6/10	1	40	250	-	
HXPD402-1	6-16	1	250								Stratos-D 40/12 250	6/10	1	40	250	-	
LD401	6-16	3/1	220								Stratos-D 40/8 220	6/10	1	40	220	-	9
LD402	6-16	3/1	220								Stratos-D 40/8 220	6/10	1	40	220	-	9
LD403	6-16	3/1	250								Stratos-D 40/8 220	6/10	1	40	220	1x F01	9
LED403	6-16	1	250								Stratos-D 40/8 220	6/10	1	40	220	1x F01	
LXD401	6-16	3/1	220								Stratos-D 40/8 220	6/10	1	40	220	-	9
LXD402	6-16	3/1	220								Stratos-D 40/8 220	6/10	1	40	220	-	9
LXD403	6-16	3/1	250								Stratos-D 40/8 220	6/10	1	40	220	1x F01	9
LXED403	6-16	1	250								Stratos-D 40/8 220	6/10	1	40	220	1x F01	
LXPD403	6-16	1	250								Stratos-D 40/8 220	6/10	1	40	220	1x F01	
ModulA-D 40-6 220 Red	6-16	1	220								Stratos-D 40/8 220	6/10	1	40	220	-	14
ModulA-D 40-8 220 Red	6-16	1	220								Stratos-D 40/8 220	6/10	1	40	220	-	14
ModulA-D 40-10 220 Red	6-16	1	220								Stratos-D 40/12 250	6/10	1	40	250	-	14
ModulA-D 40-12 250 Red	6-16	1	250								Stratos-D 40/12 250	6/10	1	40	250	-	14
ModulA-D 40-18 250 Red	6-16	1	250								Stratos-D 40/16 250	6/10	1	40	250	-	14
NZBZ40-1	6-16	3/1	220								Stratos-D 40/8 220	6/10	1	40	220	-	9
NZBZ40-1S	6-16	3	220								Stratos-D 40/8 220	6/10	1	40	220	-	9
NZBZ40-2	6-16	3/1	220								Stratos-D 40/8 220	6/10	1	40	220	-	9
NZBZ40-2S	6-16	3	220								Stratos-D 40/8 220	6/10	1	40	220	-	9
NZBZ40-3	6-16	3/1	220								Stratos-D 40/8 220	6/10	1	40	220	-	9
NZBZ40-3S	6-16	3	220								Stratos-D 40/8 220	6/10	1	40	220	-	9
NZBZ45-1	6-16	3/1	250								Stratos-D 40/8 220	6/10	1	40	220	1x F01	9
NZBZ45-1S	6-16	3	250								Stratos-D 40/8 220	6/10	1	40	220	1x F01	9
NZBZ45-2	6-16	3/1	250								Stratos-D 40/8 220	6/10	1	40	220	1x F01	9
NZBZ45-3	6-16	3/1	250								Stratos-D 40/8 220	6/10	1	40	220	1x F01	9
ZBZ40-1	6-16	3/1	220								Stratos-D 40/8 220	6/10	1	40	220	-	9
ZBZ40-2	6-16	3/1	220								Stratos-D 40/8 220	6/10	1	40	220	-	9
ZBZ40-3	6-16	3/1	220								Stratos-D 40/8 220	6/10	1	40	220	-	9
ZBZ45-1	6-16	3/1	250								Stratos-D 40/8 220	6/10	1	40	220	1x F01	9
ZBZ45-2	6-16	3/1	250								Stratos-D 40/8 220	6/10	1	40	220	1x F01	9
ZBZ45-3	6-16	3/1	250								Stratos-D 40/8 220	6/10	1	40	220	1x F01	9

Biral				Hoval Highly efficient							Hoval Premium highly efficient						
Type	PN	M	L	Type	PN	M	G/DN	L	AGS	Rem.	Type	PN	M	G/DN	L	AGS	Rem.
DN 50																	
AD501	6-16	1	270								Stratos-D 50/8 240	6/10	1	50	240	1x F04	14
AD501 V2	6-16	1	270								Stratos-D 50/8 240	6/10	1	50	240	1x F04	14
AD502	6-16	1	270								Stratos-D 50/12 280	6/10	1	50	280	RA	14
AD502 V2	6-16	1	270								Stratos-D 50/12 280	6/10	1	50	280	RA	14
HD501-1	6-16	3/1	280								Stratos-D 50/12 280	6/10	1	50	280	-	14
HD502-1	6-16	3/1	280								Stratos-D 50/12 280	6/10	1	50	280	-	14
HXCD501-1	6-16	1	280								Stratos-D 50/12 280	6/10	1	50	280	-	14
HXD501-1	6-16	1	280								Stratos-D 50/12 280	6/10	1	50	280	-	14
HXD502-1	6-16	1	280								Stratos-D 50/12 280	6/10	1	50	280	-	14
HXPD502	6-16	1	270								Stratos-D 50/12 280	6/10	1	50	280	RA	14
LD503	6-16	3/1	270								Stratos-D 50/8 240	6/10	1	50	240	1x F04	9
LD504	6-16	3/1	270								Stratos-D 50/8 240	6/10	1	50	240	1x F04	9
LED504	6-16	1	270								Stratos-D 50/8 240	6/10	1	50	240	1x F04	
LXD503	6-16	3/1	270								Stratos-D 50/8 240	6/10	1	50	240	1x F04	9
LXD504	6-16	3/1	270								Stratos-D 50/8 240	6/10	1	50	240	1x F04	9
LXED504	6-16	1	270								Stratos-D 50/8 240	6/10	1	50	240	1x F04	
LXPD504	6-16	1	270								Stratos-D 50/8 240	6/10	1	50	240	1x F04	
ModulA-D 50-6 240 Red	6-16	1	240								Stratos-D 50/8 240	6/10	1	50	240	-	14
ModulA-D 50-8 240 Red	6-16	1	240								Stratos-D 50/8 240	6/10	1	50	240	-	14
ModulA-D 50-12 270 Red	6-16	1	270								Stratos-D 50/12 280	6/10	1	50	280	RA	14
ModulA-D 50-18 270 Red	6-16	1	270								Stratos-D 50/16 340	6/10	1	50	340	RA	14
NZBZ50-1	6-16	3/1	270								Stratos-D 50/8 240	6/10	1	50	240	1x F04	
NZBZ50-1S	6-16	3	270								Stratos-D 50/8 240	6/10	1	50	240	1x F04	
NZBZ50-2	6-16	3/1	270								Stratos-D 50/8 240	6/10	1	50	240	1x F04	
NZBZ50-2S	6-16	3	270								Stratos-D 50/8 240	6/10	1	50	240	1x F04	
NZBZ50-3	6-16	3/1	270								Stratos-D 50/8 240	6/10	1	50	240	1x F04	
NZBZ55-1	6-16	3/1	270								Stratos-D 50/8 240	6/10	1	50	240	1x F04	
NZBZ55-1S	6-16	3	270								Stratos-D 50/8 240	6/10	1	50	240	1x F04	
NZBZ55-2	6-16	3/1	270								Stratos-D 50/8 240	6/10	1	50	240	1x F04	
NZBZ55-3	6-16	3/1	270								Stratos-D 50/8 240	6/10	1	50	240	1x F04	
ZBZ50-1	6-16	3/1	270								Stratos-D 50/8 240	6/10	1	50	240	1x F04	
ZBZ50-2	6-16	3/1	270								Stratos-D 50/8 240	6/10	1	50	240	1x F04	
ZBZ50-3	6-16	3/1	270								Stratos-D 50/8 240	6/10	1	50	240	1x F04	
ZBZ55-1	6-16	3/1	270								Stratos-D 50/8 240	6/10	1	50	240	1x F04	
ZBZ55-2	6-16	3/1	270								Stratos-D 50/8 240	6/10	1	50	240	1x F04	
ZBZ55-3	6-16	3/1	270								Stratos-D 50/8 240	6/10	1	50	240	1x F04	
DN 65																	
AD651	6-16	1	340								Stratos-D 65/12 340	6/10	1	65	340	-	14
AD651 V2	6-16	1	340								Stratos-D 65/12 340	6/10	1	65	340	-	14
AD652	6-16	1	340								Stratos-D 65/12 340	6/10	1	65	340	-	14
AD652V2	6-16	1	340								Stratos-D 65/12 340	6/10	1	65	340	-	14
HD652	6-16	3/1	340								Stratos-D 65/12 340	6/10	1	65	340	-	9
HXD652	6-16	3/1	340								Stratos-D 65/12 340	6/10	1	65	340	-	9
HXPD651	6-16	1	340								Stratos-D 65/12 340	6/10	1	65	340	-	
LCD650	6-16	1	340								Stratos-D 65/12 340	6/10	1	65	340	-	
LD653	6-16	3/1	300								Stratos-D 65/12 340	6/10	1	65	340	RA	9
LD654	6-16	3/1	340								Stratos-D 65/12 340	6/10	1	65	340	-	9
LD655	6-16	3/1	340								Stratos-D 65/12 340	6/10	1	65	340	-	9
LXCD655	6-16	1	340								Stratos-D 65/12 340	6/10	1	65	340	-	
LXD653	6-16	3/1	300								Stratos-D 65/12 340	6/10	1	65	340	RA	9
LXD654	6-16	3/1	340								Stratos-D 65/12 340	6/10	1	65	340	-	9
LXD655	6-16	3/1	340								Stratos-D 65/12 340	6/10	1	65	340	-	9
LXPD654	6-16	1	340								Stratos-D 65/12 340	6/10	1	65	340	-	
ModulA-D 65-8 340 Red	6-16	1	340								Stratos-D 65/12 340	6/10	1	65	340	-	14
ModulA-D 65-12 340 Red	6-16	1	340								Stratos-D 65/12 340	6/10	1	65	340	-	14
ModulA-D 65-15 340 Red	6-16	1	340								Stratos-D 65/16 340	6/10	1	65	340	-	14
NZBZ58-1	6-16	3/1	300								Stratos-D 65/12 340	6/10	1	65	340	RA	9
NZBZ58-1S	6-16	3	300								Stratos-D 65/12 340	6/10	1	65	340	RA	9
NZBZ58-2	6-16	3/1	300								Stratos-D 65/12 340	6/10	1	65	340	RA	9
NZBZ58-2S	6-16	3	300								Stratos-D 65/12 340	6/10	1	65	340	RA	9
NZBZ58-3	6-16	3/1	300								Stratos-D 65/12 340	6/10	1	65	340	RA	9
NZBZ60-1	6-16	3/1	340								Stratos-D 65/12 340	6/10	1	65	340	-	9
NZBZ60-1S	6-16	3	340								Stratos-D 65/12 340	6/10	1	65	340	-	9
NZBZ60-2	6-16	3/1	340								Stratos-D 65/12 340	6/10	1	65	340	-	9
NZBZ60-2S	6-16	3	340								Stratos-D 65/12 340	6/10	1	65	340	-	9
NZBZ60-3	6-16	3/1	340								Stratos-D 65/12 340	6/10	1	65	340	-	9
NZBZ65-1	6-16	3/1	340								Stratos-D 65/12 340	6/10	1	65	340	-	9
NZBZ65-1S	6-16	3	340								Stratos-D 65/12 340	6/10	1	65	340	-	9
NZBZ65-2	6-16	3/1	340								Stratos-D 65/12 340	6/10	1	65	340	-	9
NZBZ65-3	6-16	3/1	340								Stratos-D 65/12 340	6/10	1	65	340	-	9
ZBZ58-1	6-16	3/1	300								Stratos-D 65/12 340	6/10	1	65	340	RA	9
ZBZ58-2	6-16	3/1	300								Stratos-D 65/12 340	6/10	1	65	340	RA	9
ZBZ58-3	6-16	3/1	300								Stratos-D 65/12 340	6/10	1	65	340	RA	9
ZBZ60-1	6-16	3	340								Stratos-D 65/12 340	6/10	1	65	340	-	9
ZBZ60-2	6-16	3	340								Stratos-D 65/12 340	6/10	1	65	340	-	9
ZBZ60-3	6-16	3	340								Stratos-D 65/12 340	6/10	1	65	340	-	9
ZBZ65-1	6-16	3	340								Stratos-D 65/12 340	6/10	1	65	340	-	9
ZBZ65-2	6-16	3	340								Stratos-D 65/12 340	6/10	1	65	340	-	9
ZBZ65-3	6-16	3	340								Stratos-D 65/12 340	6/10	1	65	340	-	9

Biral				Hoval Highly efficient							Hoval Premium highly efficient						
Type	PN	M	L	Type	PN	M	G/DN	L	AGS	Rem.	Type	PN	M	G/DN	L	AGS	Rem.
DN 80																	
AD802	6/10	1	360	Stratos-D 80/12 360	6	1	80	360	-	14	Stratos-D 80/12 360	10	1	80	360	-	14
HD802	6-16	3/1	360	Stratos-D 80/12 360	6	1	80	360	-	9	Stratos-D 80/12 360	10	1	80	360	-	9
HXD802	6-16	3/1	360	Stratos-D 80/12 360	6	1	80	360	-	9	Stratos-D 80/12 360	10	1	80	360	-	9
LCD805	6-16	3/1	400	Stratos-D 80/12 360	6	1	80	360	1x F18	9	Stratos-D 80/12 360	10	1	80	360	1x F18	9
LD801	6-16	3/1	370	Stratos-D 80/12 360	6	1	80	360	1x F16	9	Stratos-D 80/12 360	10	1	80	360	1x F16	9
LD803	6-16	3/1	370	Stratos-D 80/12 360	6	1	80	360	1x F16	9	Stratos-D 80/12 360	10	1	80	360	1x F16	9
LD804	6-16	3/1	370	Stratos-D 80/12 360	6	1	80	360	1x F16	9	Stratos-D 80/12 360	10	1	80	360	1x F16	9
LD805	6-16	3/1	400	Stratos-D 80/12 360	6	1	80	360	1x F18	9	Stratos-D 80/12 360	10	1	80	360	1x F18	9
LXD802	6-16	3/1	370	Stratos-D 80/12 360	6	1	80	360	1x F16	9	Stratos-D 80/12 360	10	1	80	360	1x F16	9
LXD803	6-16	3/1	370	Stratos-D 80/12 360	6	1	80	360	1x F16	9	Stratos-D 80/12 360	10	1	80	360	1x F16	9
ModulA-D 80-8 360 Red	6	1	360								Stratos-D 80/12 360	6	1	80	360	-	14
ModulA-D 80-8 360 Red	6-16	1	360								Stratos-D 80/12 360	10	1	80	360	-	14
ModulA-D 80-12 360 Red	6	1	360								Stratos-D 80/12 360	6	1	80	360	-	14
ModulA-D 80-12 360 Red	6-16	1	360								Stratos-D 80/12 360	10	1	80	360	-	14
NZBP80-1	6-16	3/1	370	Stratos-D 80/12 360	6	1	80	360	1x F16	9	Stratos-D 80/12 360	10	1	80	360	1x F16	9
NZBP80-1S	6-16	3	370	Stratos-D 80/12 360	6	1	80	360	1x F16	9	Stratos-D 80/12 360	10	1	80	360	1x F16	9
NZBP80-2	6-16	3/1	370	Stratos-D 80/12 360	6	1	80	360	1x F16	9	Stratos-D 80/12 360	10	1	80	360	1x F16	9
NZBP80-2S	6-16	3	370	Stratos-D 80/12 360	6	1	80	360	1x F16	9	Stratos-D 80/12 360	10	1	80	360	1x F16	9
NZBP80-3	6-16	3/1	370	Stratos-D 80/12 360	6	1	80	360	1x F16	9	Stratos-D 80/12 360	10	1	80	360	1x F16	9
NZBP80-3S	6-16	3	370	Stratos-D 80/12 360	6	1	80	360	1x F16	9	Stratos-D 80/12 360	10	1	80	360	1x F16	9
NZBZ78-1	6-16	3/1	370	Stratos-D 80/12 360	6	1	80	360	1x F16	9	Stratos-D 80/12 360	10	1	80	360	1x F16	9
NZBZ78-1S	6-16	3	370	Stratos-D 80/12 360	6	1	80	360	1x F16	9	Stratos-D 80/12 360	10	1	80	360	1x F16	9
NZBZ78-2	6-16	3/1	370	Stratos-D 80/12 360	6	1	80	360	1x F16	9	Stratos-D 80/12 360	10	1	80	360	1x F16	9
NZBZ78-3	6-16	3/1	370	Stratos-D 80/12 360	6	1	80	360	1x F16	9	Stratos-D 80/12 360	10	1	80	360	1x F16	9
NZBZ80-1	6-16	3/1	400	Stratos-D 80/12 360	6	1	80	360	1x F18	9	Stratos-D 80/12 360	10	1	80	360	1x F18	9
NZBZ80-1S	6-16	3	400	Stratos-D 80/12 360	6	1	80	360	1x F18	9	Stratos-D 80/12 360	10	1	80	360	1x F18	9
NZBZ80-2	6-16	3/1	400	Stratos-D 80/12 360	6	1	80	360	1x F18	9	Stratos-D 80/12 360	10	1	80	360	1x F18	9
NZBZ80-3	6-16	3/1	400	Stratos-D 80/12 360	6	1	80	360	1x F18	9	Stratos-D 80/12 360	10	1	80	360	1x F18	9
NZBZ85-1	6-16	3/1	400	Stratos-D 80/12 360	6	1	80	360	1x F18	9	Stratos-D 80/12 360	10	1	80	360	1x F18	9
NZBZ85-1S	6-16	3	400	Stratos-D 80/12 360	6	1	80	360	1x F18	9	Stratos-D 80/12 360	10	1	80	360	1x F18	9
NZBZ85-2	6-16	3/1	400	Stratos-D 80/12 360	6	1	80	360	1x F18	9	Stratos-D 80/12 360	10	1	80	360	1x F18	9
NZBZ85-2S	6-16	3	400	Stratos-D 80/12 360	6	1	80	360	1x F18	9	Stratos-D 80/12 360	10	1	80	360	1x F18	9
NZBZ85-3	6-16	3/1	400	Stratos-D 80/12 360	6	1	80	360	1x F18	9	Stratos-D 80/12 360	10	1	80	360	1x F18	9
ZBP80-1	6-16	3/1	370	Stratos-D 80/12 360	6	1	80	360	1x F16	9	Stratos-D 80/12 360	10	1	80	360	1x F16	9
ZBP80-2	6-16	3/1	370	Stratos-D 80/12 360	6	1	80	360	1x F16	9	Stratos-D 80/12 360	10	1	80	360	1x F16	9
ZBP80-3	6-16	3/1	370	Stratos-D 80/12 360	6	1	80	360	1x F16	9	Stratos-D 80/12 360	10	1	80	360	1x F16	9
ZBZ78-2	6-16	3/1	370	Stratos-D 80/12 360	6	1	80	360	1x F16	9	Stratos-D 80/12 360	10	1	80	360	1x F16	9
ZBZ78-3	6-16	3/1	370	Stratos-D 80/12 360	6	1	80	360	1x F16	9	Stratos-D 80/12 360	10	1	80	360	1x F16	9
ZBZ80-1	6-16	3/1	400	Stratos-D 80/12 360	6	1	80	360	1x F18	9	Stratos-D 80/12 360	10	1	80	360	1x F18	9
ZBZ80-2	6-16	3/1	400	Stratos-D 80/12 360	6	1	80	360	1x F18	9	Stratos-D 80/12 360	10	1	80	360	1x F18	9
ZBZ80-3	6-16	3/1	400	Stratos-D 80/12 360	6	1	80	360	1x F18	9	Stratos-D 80/12 360	10	1	80	360	1x F18	9
ZBZ85-1	6-16	3/1	400	Stratos-D 80/12 360	6	1	80	360	1x F18	9	Stratos-D 80/12 360	10	1	80	360	1x F18	9
ZBZ85-2	6-16	3/1	400	Stratos-D 80/12 360	6	1	80	360	1x F18	9	Stratos-D 80/12 360	10	1	80	360	1x F18	9
ZBZ85-3	6-16	3/1	400	Stratos-D 80/12 360	6	1	80	360	1x F18	9	Stratos-D 80/12 360	10	1	80	360	1x F18	9
DN 100																	
LD1001	6-16	1	450														
LD1002	6-16	1	450														
LD1003	6-16	1	450														
LD1004	6-16	1	450														
ModulA-D 100-12 450 Red	6	1	450														
ModulA-D 100-12 450 Red	6-16	1	450														
NZBP100-1	6-16	3	450														
NZBP100-1S	6-16	3	450														
NZBP100-2S	6-16	3	450														
NZBP100-3	6-16	3	450														
NZBP100-3S	6-16	3	450														
NZBZ100-1	6-16	3	450														
NZBZ100-1S	6-16	3	450														
NZBZ100-2	6-16	3	450														
NZBZ100-2S	6-16	3	450														
NZBZ100-3	6-16	3	450														
NZBZ100-3S	6-16	3	450														
NZBZ100-4	6-16	3	450														
NZBZ100-4S	6-16	3	450														
ZBP100-1	6-16	3	450														
ZBP100-2	6-16	3	450														
ZBP100-3	6-16	3	450														
ZBZ100-1	6-16	3	450														
ZBZ100-2	6-16	3	450														
ZBZ100-3	6-16	3	450														
ZBZ100-4	6-16	3	450														

Biral				Hoval Highly efficient							Hoval Premium highly efficient						
Type	PN	M	L	Type	PN	M	G/DN	L	AGS	Rem.	Type	PN	M	G/DN	L	AGS	Rem.
Solar circulating pumps																	
AXS15-4	10	1	130	SPS-S 15/7.5 130 SMO	6	1	G1	130	-								
MXS13-1	10	1	180	SPS-S 25/6 180 SMO	6	1	G1½	180	-		Stratos Pico 25/6 180	6	1	G1½	180	-	
SX12-1	10	1	180	SPS-S 25/6 180 SMO	6	1	G1½	180	-		Stratos Pico 25/4 180	6	1	G1½	180	-	
SX12-4	10	1	130	SPS-S 15/6 130 SMO	6	1	G1	130	-		Stratos Pico 15/4 130	6	1	G1	130	-	
SX13-1	10	1	180	SPS-S 25/6 180 SMO	6	1	G1½	180	-		Stratos Pico 25/6 180	6	1	G1½	180	-	
SX13-4	10	1	130	SPS-S 15/6 130 SMO	6	1	G1	130	-		Stratos Pico 15/6 130	6	1	G1	130	-	
SX15-4	10	1	130	SPS-S 15/7.5 130 SMO	6	1	G1	130	-								

Biral				Hoval Highly efficient							Hoval Premium highly efficient						
Type	PN	M	L	Type	PN	M	G/DN	L	AGS	Rem.	Type	PN	M	G/DN	L	AGS	Rem.
Circulating pumps domestic hot water																	
G 1¼ (Rp ¾)																	
AX20-0.8 120 BLUE	10	1	120	SPS-Z 20/7 150 SMO	10	1	G1¼	150	RA								
AX20-4 120 BLUE	10	1	120	SPS-Z 20/7 150 SMO	10	1	G1¼	150	RA								
AX20-6 150 BLUE	10	1	150	SPS-Z 20/7 150 SMO	10	1	G1¼	150	RA								
AXW10	10	1	120	SPS-Z 20/7 150 SMO	10	1	G1¼	150	RA								
AXW10 SMART	10	1	120	SPS-Z 20/7 150 SMO	10	1	G1¼	150	RA								
AXW12	10	1	120	SPS-Z 20/7 150 SMO	10	1	G1¼	150	RA								
AXW12 SMART	10	1	120	SPS-Z 20/7 150 SMO	10	1	G1¼	150	RA								
AXW13	10	1	150	SPS-Z 20/7 150 SMO	10	1	G1¼	150	-								
AXW13 SMART	10	1	150	SPS-Z 20/7 150 SMO	10	1	G1¼	150	-								
AXW14 SMART	10	1	150	SPS-Z 20/7 150 SMO	10	1	G1¼	150	-								
NBW10	10	1	120	SPS-Z 20/7 150 SMO	10	1	G1¼	150	RA								
NBW12	10	1	120	SPS-Z 20/7 150 SMO	10	1	G1¼	150	RA								
NBW13	10	1	150	SPS-Z 20/7 150 SMO	10	1	G1¼	150	-								
NBW313	10	3	150	SPS-Z 20/7 150 SMO	10	1	G1¼	150	-	9							
W10	10	1	120	SPS-Z 20/7 150 SMO	10	1	G1¼	150	RA								
W12	10	1	120	SPS-Z 20/7 150 SMO	10	1	G1¼	150	RA								
W13	10	1	150	SPS-Z 20/7 150 SMO	10	1	G1¼	150	-								
W14	10	1	150	SPS-Z 20/7 150 SMO	10	1	G1¼	150	-								
W313	10	3	150	SPS-Z 20/7 150 SMO	10	1	G1¼	150	-	9							
W314	10	3	150	SPS-Z 20/7 150 SMO	10	1	G1¼	150	-	9							
WX10	10	1	120	SPS-Z 20/7 150 SMO	10	1	G1¼	150	RA								
WX12	10	1	120	SPS-Z 20/7 150 SMO	10	1	G1¼	150	RA								
WX13	10	1	150	SPS-Z 20/7 150 SMO	10	1	G1¼	150	-								
WX14	10	1	150	SPS-Z 20/7 150 SMO	10	1	G1¼	150	-								
G 1½ (Rp 1)																	
AX25-4 180 BLUE	10	1	180	SPS-Z 25/7 180 SMO	10	1	G1½	180	-		Stratos Pico-Z 25/6 180	10	1	G1½	180	-	
AX25-6 180 BLUE	10	1	180	SPS-Z 25/7 180 SMO	10	1	G1½	180	-		Stratos Pico-Z 25/6 180	10	1	G1½	180	-	
AXW12-1	10	1	180	SPS-Z 25/7 180 SMO	10	1	G1½	180	-								
AXW13-1	10	1	180	SPS-Z 25/7 180 SMO	10	1	G1½	180	-								
ModulA 25-4 180 BLUE	10	1	180	SPS-Z 25/7 180 SMO	10	1	G1½	180	-		Stratos Pico-Z 25/6 180	10	1	G1½	180	-	
ModulA 25-6 180 BLUE	10	1	180	SPS-Z 25/7 180 SMO	10	1	G1½	180	-		Stratos Pico-Z 25/6 180	10	1	G1½	180	-	
ModulA 25-8 180 BLUE	10	1	180	Top-Z 30/10 180	10	1	G2	180	RA		Stratos-Z 30/8 180	10	1	G2	180	RA	
ModulA 25-10 180 BLUE	10	1	180	Top-Z 30/10 180	10	1	G2	180	RA		Stratos-Z 30/12 180	10	1	G2	180	RA	
ModulA 25-12 180 BLUE	10	1	180								Stratos-Z 30/12 180	10	1	G2	180	RA	
G 2 (Rp 1¼)																	
AW15-2	10	1	180	Top-Z 30/10 180	10	1	G2	180	-		Stratos-Z 30/8 180	10	1	G2	180	-	
AW16-2	10	1	180	Top-Z 30/10 180	10	1	G2	180	-		Stratos-Z 30/12 180	10	1	G2	180	-	
G301	10	3	190	SPS-Z 25/7 180 SMO	10	1	G1½	180	2x R05	9	Stratos Pico-Z 25/6 180	10	1	G1½	180	2x R05	9
G302	10	3	190	SPS-Z 25/7 180 SMO	10	1	G1½	180	2x R05	9	Stratos Pico-Z 25/6 180	10	1	G1½	180	2x R05	9
G303	10	3	190	SPS-Z 25/7 180 SMO	10	1	G1½	180	2x R05	9	Stratos Pico-Z 25/6 180	10	1	G1½	180	2x R05	9
G304	10	3	190	SPS-Z 25/7 180 SMO	10	1	G1½	180	2x R05	9	Stratos Pico-Z 25/6 180	10	1	G1½	180	2x R05	9
G305	10	3	190	SPS-Z 25/7 180 SMO	10	1	G1½	180	2x R05	9	Stratos Pico-Z 25/6 180	10	1	G1½	180	2x R05	9
G351	10	3	210	SPS-Z 25/7 180 SMO	10	1	G1½	180	2x R05	9	Stratos Pico-Z 25/6 180	10	1	G1½	180	2x R05	9
G352	10	3	210	SPS-Z 25/7 180 SMO	10	1	G1½	180	2x R05	9	Stratos Pico-Z 25/6 180	10	1	G1½	180	2x R05	9
ModulA 32-4 180 BLUE	10	1	180								Stratos-Z 30/8 180	10	1	G2	180	-	14
ModulA 32-6 180 BLUE	10	1	180								Stratos-Z 30/8 180	10	1	G2	180	-	14
ModulA 32-8 180 BLUE	10	1	180								Stratos-Z 30/8 180	10	1	G2	180	-	14
ModulA 32-10 180 BLUE	10	1	180								Stratos-Z 30/12 180	10	1	G2	180	-	14
ModulA 32-12 180 BLUE	10	1	180								Stratos-Z 30/12 180	10	1	G2	180	-	14
RW1	10	1	170	SPS-Z 25/7 180 SMO	10	1	G1½	180	RA		Stratos Pico-Z 25/6 180	10	1	G1½	180	RA	
RW2	10	1	170	SPS-Z 25/7 180 SMO	10	1	G1½	180	RA		Stratos Pico-Z 25/6 180	10	1	G1½	180	RA	
RW30	10	3	190	SPS-Z 25/7 180 SMO	10	1	G1½	180	2x R05	9	Stratos Pico-Z 25/6 180	10	1	G1½	180	2x R05	9
RW31	10	3	170	SPS-Z 25/7 180 SMO	10	1	G1½	180	RA	9	Stratos Pico-Z 25/6 180	10	1	G1½	180	RA	9
RW32	10	3	170	SPS-Z 25/7 180 SMO	10	1	G1½	180	RA	9	Stratos Pico-Z 25/6 180	10	1	G1½	180	RA	9
RW35	10	3	210	SPS-Z 25/7 180 SMO	10	1	G1½	180	RA	9	Stratos Pico-Z 25/6 180	10	1	G1½	180	RA	9
W301	10	3	190	SPS-Z 25/7 180 SMO	10	1	G1½	180	2x R05	9	Stratos Pico-Z 25/6 180	10	1	G1½	180	2x R05	9
W302	10	3	190	SPS-Z 25/7 180 SMO	10	1	G1½	180	2x R05	9	Stratos Pico-Z 25/6 180	10	1	G1½	180	2x R05	9
W303	10	3	190	SPS-Z 25/7 180 SMO	10	1	G1½	180	2x R05	9	Stratos Pico-Z 25/6 180	10	1	G1½	180	2x R05	9
W304	10	3	190	SPS-Z 25/7 180 SMO	10	1	G1½	180	2x R05	9	Stratos Pico-Z 25/6 180	10	1	G1½	180	2x R05	9
W305	10	3	190	SPS-Z 25/7 180 SMO	10	1	G1½	180	2x R05	9	Stratos Pico-Z 25/6 180	10	1	G1½	180	2x R05	9
W315	10	3	180	Top-Z 30/10 180	10	1	G2	180	-	9	Stratos-Z 30/12 180	10	1	G2	180	-	9
W351	10	3	210	Top-Z 30/10 180	10	1	G2	180	1x R10	9	Stratos-Z 30/12 180	10	1	G2	180	1x R10	9
W352	10	3	210	Top-Z 30/10 180	10	1	G2	180	1x R10	9	Stratos-Z 30/12 180	10	1	G2	180	1x R10	9
W353	10	3	210	Top-Z 30/10 180	10	1	G2	180	1x R10	9	Stratos-Z 30/12 180	10	1	G2	180	1x R10	9

Biral				Hoval Highly efficient							Hoval Premium highly efficient						
Type	PN	M	L	Type	PN	M	G/DN	L	AGS	Rem.	Type	PN	M	G/DN	L	AGS	Rem.
DN 32																	
NRW30	16	3/1	190	SPS-Z 25/7 180 SMO	10	1	G1½	180	RA	9	Stratos Pico-Z 25/6 180	10	1	G1½	180	RA	9
NRW30	10	3	190	SPS-Z 25/7 180 SMO	10	1	G1½	180	RA	9	Stratos Pico-Z 25/6 180	10	1	G1½	180	RA	9
NRW35	16	3/1	210	SPS-Z 25/7 180 SMO	10	1	G1½	180	RA	9	Stratos-Z 30/8 180	10	1	G2	180	RA	9
NRW35	10	3	210	SPS-Z 25/7 180 SMO	10	1	G1½	180	RA	9	Stratos-Z 30/8 180	10	1	G2	180	RA	9
DN 40																	
AW401-1	6/10	1	250								Stratos-Z 40/12 250	6/10	1	40	250	-	
AW402-1 V2	6-16	1	250								Stratos-Z 40/12 250	6/10	1	40	250	-	
BW45	6/10	3/1	250	Top-Z 40/7 250	10	1	40	250	-	9	Stratos-Z 40/8 220	6/10	1	40	220	1x F01	14
BW45-1	6/10	3/1	250	Top-Z 40/7 250	10	1	40	250	-	9	Stratos-Z 40/8 220	6/10	1	40	220	1x F01	14
BW45-2	6/10	3/1	250	Top-Z 40/7 250	10	1	40	250	-	9	Stratos-Z 40/8 220	6/10	1	40	220	1x F01	14
G451	6-16	3/1	250								Stratos-Z 40/12 250	6/10	1	40	250	-	14
ModulA 40-11 250 BLUE	6-16	1	250								Stratos-Z 40/12 250	6/10	1	40	250	-	14
ModulA 40-12 250 BLUE	6-16	1	250								Stratos-Z 40/12 250	6/10	1	40	250	-	14
ModulA 40-18 250 BLUE	6-16	1	250								Stratos-Z 40/12 250	6/10	1	40	250	-	14
NBW45	6/10	3/1	250	Top-Z 40/7 250	10	1	40	250	-	9	Stratos-Z 40/8 220	6/10	1	40	220	1x F01	14
NBW45-1	6/10	3/1	250	Top-Z 40/7 250	10	1	40	250	-	9	Stratos-Z 40/8 220	6/10	1	40	220	1x F01	14
NBW45-2	6/10	3/1	250	Top-Z 40/7 250	10	1	40	250	-	9	Stratos-Z 40/8 220	6/10	1	40	220	1x F01	14
W401	6-16	3/1	250	Top-Z 40/7 250	10	1	40	250	-	9	Stratos-Z 40/12 250	6/10	1	40	250	-	9
W402	6-16	3/1	250	Top-Z 40/7 250	10	1	40	250	-	9	Stratos-Z 40/12 250	6/10	1	40	250	-	9
W403	6-16	3/1	250	Top-Z 40/7 250	10	1	40	250	-	9	Stratos-Z 40/12 250	6/10	1	40	250	-	9
W451	6-16	3/1	250	Top-Z 40/7 250	10	1	40	250	-	9	Stratos-Z 40/12 250	6/10	1	40	250	-	9
W452	6-16	3/1	250	Top-Z 40/7 250	10	1	40	250	-	9	Stratos-Z 40/12 250	6/10	1	40	250	-	9
W453	6-16	3/1	250	Top-Z 40/7 250	10	1	40	250	-	9	Stratos-Z 40/12 250	6/10	1	40	250	-	9

Circulating Pumps (Myson / Sundstrand)				Hoval							Hoval						
Type	PN	M	L	Type	PN	M	G/DN	L	AGS	Rem.	Type	PN	M	G/DN	L	AGS	Rem.
G 1½ (Rp 1)																	
CP 21	10	1	180	HSP 25/6 180 SMO	6	1	G1½	180	-		Stratos Pico 25/6 180	10	1	G1½	180	-	
CP 23	10	1	180	HSP 25/6 180 SMO	6	1	G1½	180	-		Stratos Pico 25/6 180	10	1	G1½	180	-	
CP 41	10	1	130	HSP 15/6 130 SMO	6	1	G1	130	1x PAS12		Stratos Pico 25/6 130	10	1	G1½	130	-	
CP 41	10	1	180	HSP 25/6 180 SMO	6	1	G1½	180	-		Stratos Pico 25/6 180	10	1	G1½	180	-	
CP 43	10	1	130	HSP 15/6 130 SMO	6	1	G1	130	1x PAS12		Stratos Pico 25/6 130	10	1	G1½	130	-	
CP 43	10	1	180	HSP 25/6 180 SMO	6	1	G1½	180	-		Stratos Pico 25/6 180	10	1	G1½	180	-	
CP 50	6	1	130	HSP 25/6 180 SMO	6	1	G1½	180	-		Stratos Pico 25/6 180	10	1	G1½	180	-	
CP 50-180	6	1	180	HSP 25/6 180 SMO	6	1	G1½	180	-		Stratos Pico 25/6 180	10	1	G1½	180	-	
CP 51	10	1	130	HSP 15/6 130 SMO	6	1	G1	130	1x PAS12		Stratos Pico 25/6 130	10	1	G1½	130	-	
CP 51	10	1	180	HSP 25/6 180 SMO	6	1	G1½	180	-		Stratos Pico 25/6 180	10	1	G1½	180	-	
CP 53	10	1	130	HSP 15/6 130 SMO	6	1	G1	130	1x PAS12		Stratos Pico 25/6 130	10	1	G1½	130	-	
CP 53	10	1	180	HSP 25/6 180 SMO	6	1	G1½	180	-		Stratos Pico 25/6 180	10	1	G1½	180	-	
CP 60	6	1	130	HSP 15/6 130 SMO	6	1	G1	130	1x PAS12		Stratos Pico 25/6 130	10	1	G1½	130	-	
CP 61	10	1	130	HSP 15/6 130 SMO	6	1	G1	130	1x PAS12		Stratos Pico 25/6 130	10	1	G1½	130	-	
CP 61	10	1	180	HSP 25/6 180 SMO	6	1	G1½	180	-		Stratos Pico 25/6 180	10	1	G1½	180	-	
CP 63	10	1	130	HSP 15/6 130 SMO	6	1	G1	130	1x PAS12		Stratos Pico 25/6 130	10	1	G1½	130	-	
CP 63	10	1	180	HSP 25/6 180 SMO	6	1	G1½	180	-		Stratos Pico 25/6 180	10	1	G1½	180	-	
SD 51	10	1	130	HSP 15/6 130 SMO	6	1	G1	130	1x PAS12		Stratos Pico 25/6 130	10	1	G1½	130	-	
SD 52	10	1	130	HSP 15/6 130 SMO	6	1	G1	130	1x PAS12		Stratos Pico 25/6 130	10	1	G1½	130	-	
SD 53	10	1	130	HSP 15/6 130 SMO	6	1	G1	130	1x PAS12		Stratos Pico 25/6 130	10	1	G1½	130	-	
SD 61	10	1	130	HSP 15/6 130 SMO	6	1	G1	130	1x PAS12		Stratos Pico 25/6 130	10	1	G1½	130	-	
SD 63	10	1	130	HSP 15/6 130 SMO	6	1	G1	130	1x PAS12		Stratos Pico 25/6 130	10	1	G1½	130	-	
Oval flange 1"-2"																	
CP 41	10	1	120	HSP 15/6 130 SMO	6	1	G1	130	RA		Stratos Pico 15/6 130	10	1	G1	130	RA	
CP 43	10	1	120	HSP 15/6 130 SMO	6	1	G1	130	RA		Stratos Pico 15/6 130	10	1	G1	130	RA	
CP 51	10	1	120	HSP 15/6 130 SMO	6	1	G1	130	RA		Stratos Pico 15/6 130	10	1	G1	130	RA	
CP 53	10	1	120	HSP 15/6 130 SMO	6	1	G1	130	RA		Stratos Pico 15/6 130	10	1	G1	130	RA	
CP 61	10	1	120	HSP 15/6 130 SMO	6	1	G1	130	RA		Stratos Pico 15/6 130	10	1	G1	130	RA	
CP 63	10	1	120	HSP 15/6 130 SMO	6	1	G1	130	RA		Stratos Pico 15/6 130	10	1	G1	130	RA	
LA 22	10	1	120	HSP 15/6 130 SMO	6	1	G1	130	RA		Stratos Pico 15/6 130	10	1	G1	130	RA	
LA 42	10	1	120	HSP 15/6 130 SMO	6	1	G1	130	RA		Stratos Pico 15/6 130	10	1	G1	130	RA	
LA 46	10	1	120	HSP 15/6 130 SMO	6	1	G1	130	RA		Stratos Pico 15/6 130	10	1	G1	130	RA	
LA 52	10	1	120	HSP 15/6 130 SMO	6	1	G1	130	RA		Stratos Pico 15/6 130	10	1	G1	130	RA	
LA 56	10	1	120	HSP 15/6 130 SMO	6	1	G1	130	RA		Stratos Pico 15/6 130	10	1	G1	130	RA	
LC 22	10	1	120	HSP 15/6 130 SMO	6	1	G1	130	RA		Stratos Pico 15/6 130	10	1	G1	130	RA	
LC 42	10	1	120	HSP 15/6 130 SMO	6	1	G1	130	RA		Stratos Pico 15/6 130	10	1	G1	130	RA	
LC 46	10	1	120	HSP 15/6 130 SMO	6	1	G1	130	RA		Stratos Pico 15/6 130	10	1	G1	130	RA	
LC 52	10	1	120	HSP 15/6 130 SMO	6	1	G1	130	RA		Stratos Pico 15/6 130	10	1	G1	130	RA	
LC 56	10	1	120	HSP 15/6 130 SMO	6	1	G1	130	RA		Stratos Pico 15/6 130	10	1	G1	130	RA	
Maxi	10	1	120	HSP 15/6 130 SMO	6	1	G1	130	RA		Stratos Pico 15/6 130	10	1	G1	130	RA	
Midi	10	1	120	HSP 15/6 130 SMO	6	1	G1	130	RA		Stratos Pico 15/6 130	10	1	G1	130	RA	
SD 52	10	1	120	HSP 15/6 130 SMO	6	1	G1	130	RA		Stratos Pico 15/6 130	10	1	G1	130	RA	
U 10	10	3/1	120	HSP 15/4 130 SMO	6	1	G1	130	RA		Stratos Pico 15/4 130	10	1	G1	130	RA	
U 35	10	3/1	120	HSP 15/4 130 SMO	6	1	G1	130	RA		Stratos Pico 15/4 130	10	1	G1	130	RA	
U 40	10	3/1	120	HSP 15/4 130 SMO	6	1	G1	130	RA		Stratos Pico 15/4 130	10	1	G1	130	RA	
UA 40	10	3/1	120	HSP 15/4 130 SMO	6	1	G1	130	RA		Stratos Pico 15/4 130	10	1	G1	130	RA	
UA 45	10	3/1	120	HSP 15/6 130 SMO	6	1	G1	130	RA		Stratos Pico 15/6 130	10	1	G1	130	RA	
UC 40	10	3/1	120	HSP 15/4 130 SMO	6	1	G1	130	RA		Stratos Pico 15/4 130	10	1	G1	130	RA	
UC 45	10	3/1	120	HSP 15/6 130 SMO	6	1	G1	130	RA		Stratos Pico 15/6 130	10	1	G1	130	RA	
W 10	10	1	120	HSP 15/4 130 SMO	6	1	G1	130	RA		Stratos Pico 15/4 130	10	1	G1	130	RA	
W 40	10	1	120	HSP 15/4 130 SMO	6	1	G1	130	RA		Stratos Pico 15/4 130	10	1	G1	130	RA	
W 45	10	1	120	HSP 15/6 130 SMO	6	1	G1	130	RA		Stratos Pico 15/6 130	10	1	G1	130	RA	
G 2 (Rp 1¼)																	
CP 43	10	1	180	HSP 30/6 180SMO	6	1	G2	180	-		Stratos Pico 30/6 180	6	1	G2	180	-	
CP 53	10	1	180	HSP 30/6 180SMO	6	1	G2	180	-		Stratos Pico 30/6 180	6	1	G2	180	-	
CP 63	10	1	180	HSP 30/6 180SMO	6	1	G2	180	-		Stratos Pico 30/6 180	6	1	G2	180	-	
SE 125	10	1	180	SPS-I 25/8 180	10	1	G1½	180	-		Stratos 25/8 180	10	1	G1½	180	-	
SE 200	10	1	244	SPS-I 30/12 180	10	1	G2	180	1xR09 / 2xR14								
DN 40																	
SE 150	10	1	244	SPS-I 40/12 220	10	1	40	220	RA		Stratos 40/8 220	6/10	1	40	220	RA	
SF 40-60-250-1	6/10	1	250	SPS-I 40/8 220	10	1	40	220	1x F01	14	Stratos 40/8 220	6/10	1	40	220	-	14
SF 40-60-250-3	6	3	250	SPS-I 40/8 220	10	1	40	220	1x F01	14	Stratos 40/8 220	6/10	1	40	220	-	9,14
SF 40-60-250-3	10	3	250	SPS-I 40/8 220	10	1	40	220	1x F01	14	Stratos 40/8 220	6/10	1	40	220	-	9,14
SF 40-120-250-1	6/10	1	250								Stratos 40/12 250	6/10	1	40	250	-	14
SF 40-120-250-3	6/10	3	250								Stratos 40/12 250	6/10	1	40	250	-	9,14
DN 50																	
SF 50-60-280-1	6/10	1	280	SPS-I 30/12 180	10	1	G2	180	2xRF06 / 1xF04	14	Stratos 50/6 240	6/10	1	50	240	2x F03	14
SF 50-60-280-3	6/10	3	280	SPS-I 30/12 180	10	1	G2	180	2xRF06 / 1xF04	14	Stratos 50/6 240	6/10	1	50	240	2x F03	9,14
SF 50-120-280-1	6/10	1	280								Stratos 50/12 280	6/10	1	50	280	-	14
SF 50-120-280-3	6/10	3	280								Stratos 50/12 280	6/10	1	50	280	-	9,14
DN 65																	
SF 65-60-340-1	6/10	1	340								Stratos 65/9 280	6/10	1	65	280	2x F11	
SF 65-60-340-3	6/10	3	340								Stratos 65/9 280	6/10	1	65	280	2x F11	9
SF 65-120-340-1	6/10	1	340								Stratos 65/12 340	6/10	1	65	340	-	
SF 65-120-340-3	6/10	3	340								Stratos 65/12 340	6/10	1	65	340	-	9
DN 80																	
SF 80-60-360-3	6/10	3	360	Stratos 80/12 360	6	1	PN6	360	-		Stratos 80/12 360	10	1	PN10	360	-	9
SF 80-120-360-3	6/10	3	360	Stratos 80/12 360	6	1	PN6	360	-		Stratos 80/12 360	10	1	PN10	360	-	9

Circulating Pumps (Myson / Sundstrand)				Hoval Highly efficient							Hoval Premium highly efficientt						
Type	PN	M	L	Type	PN	M	G/DN	L	AGS	Rem.	Type	PN	M	G/DN	L	AGS	Rem.
Circulating pumps domestic hot water																	
G 1½ (Rp 1)																	
SE 20 B	10	1	130	SPS-Z 15/7 130 SMO	10	1	G1	130	1x PAS12								
SE 60 B	10	1	130	SPS-Z 25/7 180 SMO	10	1	G1½	180	1x PAS12								

Cuenod				Hoval													
Type	PN	M	L	Type	PN	M	G/DN	L	AGS	Rem.	Type	PN	M	G/DN	L	AGS	Rem.
G 1½ (Rp 1)																	
BN 110	10	1	130	HSP 15/4 130 SMO	6	1	G1	130	1x PAS12		Stratos Pico 25/4 130	10	1	G1½	130	-	
BN 125	10	1	180	HSP 25/4 180 SMO	6	1	G1½	180	-		Stratos Pico 25/4 180	10	1	G1½	180	-	
BN 140 (R 1)	10	1	180	HSP 25/6 180 SMO	6	1	G1½	180	-		Stratos Pico 25/6 180	10	1	G1½	180	-	
TH 1	10	3/1	200	HSP 25/6 180 SMO	6	1	G1½	180	RA	9	Stratos Pico 25/6 180	10	1	G1½	180	RA	9
G 2 (Rp 1¼)																	
B 114	10	3/1	150	HSP 15/4 130 SMO	6	1	G1	130	RA	9	Stratos Pico 15/4 130	10	1	G1	130	RA	9
B 116	10	3/1	150	HSP 15/4 130 SMO	6	1	G1	130	RA	9	Stratos Pico 15/4 130	10	1	G1	130	RA	9
B 130	10	3/1	150	HSP 30/4 180 SMO	6	1	G2	180	RA	9	Stratos Pico 30/4 180	6	1	G2	180	RA	9
B 135	10	3/1	150	HSP 15/4 130 SMO	6	1	G1	130	RA	9	Stratos Pico 15/4 130	10	1	G1	130	RA	9
B 140	10	1	150	HSP 30/6 180 SMO	6	1	G2	180	1x R08		Stratos Pico 30/6 180	6	1	G2	180	1x R08	
B 142	10	3/1	150	HSP 30/6 180 SMO	6	1	G2	180	1x R08	9	Stratos Pico 30/6 180	6	1	G2	180	1x R08	9
B 150	10	1	150	HSP 30/6 180 SMO	6	1	G2	180	1x R08		Stratos Pico 30/6 180	6	1	G2	180	1x R08	
B 170...171	6/10	3/1	150	HSP 30/6 180 SMO	6	1	G2	180	1x R08	9	Stratos Pico 30/6 180	6	1	G2	180	1x R08	9
BN 140 (R 1¼)	10	1	180	HSP 30/6 180 SMO	6	1	G2	180	-		Stratos Pico 30/6 180	6	1	G2	180	-	
BN 156	10	3/1	180	SPS-I 30/8 180	10	1	G2	180	-	9	Stratos 30/6 180	10	1	G2	180	-	9
BN 170...171	10	3/1	180	SPS-I 30/8 180	10	1	G2	180	-	9	Stratos 30/6 180	10	1	G2	180	-	9
BN 191	10	3/1	180	SPS-I 30/8 180	10	1	G2	180	-	9	Stratos 30/6 180	10	1	G2	180	-	9
H 12	10	3/1	200	HSP 30/4 180 SMO	6	1	G2	180	1x R08	9	Stratos Pico 30/4 180	6	1	G2	180	1x R08	9
P 0/2	10	3/1	200	HSP 30/6 180 SMO	6	1	G2	180	1x R08	9	Stratos Pico 30/6 180	6	1	G2	180	1x R08	9
P 0/4	10	3/1	200	HSP 30/4 180 SMO	6	1	G2	180	1x R08	9	Stratos Pico 30/4 180	6	1	G2	180	1x R08	9
PB 0-7	10	3/1	200	HSP 30/4 180 SMO	6	1	G2	180	1x R08	9	Stratos Pico 30/4 180	6	1	G2	180	1x R08	9
PM 1-11	10	3/1	200	HSP 30/4 180 SMO	6	1	G2	180	1x R08	9	Stratos Pico 30/4 180	6	1	G2	180	1x R08	9
PM 1-14	10	3/1	200	HSP 30/4 180 SMO	6	1	G2	180	1x R08	9	Stratos Pico 30/4 180	6	1	G2	180	1x R08	9
PM 1-17	10	3/1	200	HSP 30/4 180 SMO	6	1	G2	180	1x R08	9	Stratos Pico 30/4 180	6	1	G2	180	1x R08	9
PM 1-20	10	3/1	200	HSP 30/6 180 SMO	6	1	G2	180	1x R08	9	Stratos Pico 30/6 180	6	1	G2	180	1x R08	9
R 24	10	3/1	200	HSP 30/6 180 SMO	6	1	G2	180	1x R08	9	Stratos Pico 30/6 180	6	1	G2	180	1x R08	9
R 240	10	3/1	200	HSP 30/4 180 SMO	6	1	G2	180	1x R08	9	Stratos Pico 30/4 180	6	1	G2	180	1x R08	9
R 241	10	3/1	200	HSP 30/4 180 SMO	6	1	G2	180	1x R08	9	Stratos Pico 30/4 180	6	1	G2	180	1x R08	9
R 242	10	3/1	200	HSP 30/4 180 SMO	6	1	G2	180	1x R08	9	Stratos Pico 30/4 180	6	1	G2	180	1x R08	9
R 243	10	3/1	200	HSP 30/4 180 SMO	6	1	G2	180	1x R08	9	Stratos Pico 30/4 180	6	1	G2	180	1x R08	9
S 1-17	10	3/1	200	HSP 30/6 180 SMO	6	1	G2	180	1x R08	9	Stratos Pico 30/6 180	6	1	G2	180	1x R08	9
S 1-8	10	3/1	200	HSP 30/4 180 SMO	6	1	G2	180	1x R08	9	Stratos Pico 30/4 180	6	1	G2	180	1x R08	9
T 1-12	10	3/1	200	HSP 30/4 180 SMO	6	1	G2	180	1x R08	9	Stratos Pico 30/4 180	6	1	G2	180	1x R08	9
T 1-20	10	3/1	200	HSP 30/4 180 SMO	6	1	G2	180	1x R08	9	Stratos Pico 30/4 180	6	1	G2	180	1x R08	9
DN 40																	
B 222	6/10	3/1	250	SPS-I 30/8 180	10	1	G2	180	2xRF12 / 1xF26	9	Stratos 40/4 220	6/10	1	40	220	1x F01	9
B 225	6/10	3/1	250	SPS-I 30/8 180	10	1	G2	180	2xRF12 / 1xF26	9	Stratos 40/4 220	6/10	1	40	220	1x F01	9
P 1/4	6/10	3/1	250	SPS-I 30/8 180	10	1	G2	180	2xRF12 / 1xF26	9	Stratos 40/4 220	6/10	1	40	220	1x F01	9
R 225	6/10	3/1	250	SPS-I 30/8 180	10	1	G2	180	2xRF12 / 1xF26	9	Stratos 40/4 220	6/10	1	40	220	1x F01	9
R 34	6/10	3/1	270								Stratos 50/8 240	6/10	1	50	240	RA	9
R 340	6/10	3/1	270	SPS-I 40/12 220	10	1	40	220	1x F26	9	Stratos 40/4 220	6/10	1	40	220	1x F26	9
R 341	6/10	3/1	270								Stratos 65/6 280	6/10	1	65	280	RA	9
R 342	6/10	3/1	270	SPS-I 40/12 220	10	1	40	220	1x F26	9	Stratos 40/4 220	6/10	1	40	220	1x F26	9
T 2-26	6/10	3/1	250	SPS-I 30/8 180	10	1	G2	180	2xRF12 / 1xF26	9	Stratos 40/4 220	6/10	1	40	220	1x F01	9
T 2-32	6/10	3/1	250	SPS-I 30/8 180	10	1	G2	180	2xRF12 / 1xF26	9	Stratos 40/4 220	6/10	1	40	220	1x F01	9
DN 50																	
B 340	6/10	3/1	270								Stratos 50/6 240	6/10	1	50	240	1x F04	9
C 0/2	6/10	3/1	165								Stratos 50/8 240	6/10	1	50	240	RA	9
EB 225	6/10	3/1	280								Stratos 50/8 240	6/10	1	50	240	2x F03	9
H 24	6/10	3/1	250								Stratos 50/8 240	6/10	1	50	240	1x F02	9
H 24 S	6/10	3/1	250								Stratos 50/8 240	6/10	1	50	240	1x F02	9
P 2/4	6/10	3/1	335								Stratos 50/6 240	6/10	1	50	240	RA	9
P 2/6	6/10	3/1	335								Stratos 50/6 240	6/10	1	50	240	RA	9
PB 1-8	6/10	3/1	250								Stratos 50/8 240	6/10	1	50	240	1x F02	9
R 44	6/10	3/1	335								Stratos 50/6 240	6/10	1	50	240	RA	9
R 441	6/10	3/1	335								Stratos 50/6 240	6/10	1	50	240	RA	9
T 3-37	6/10	3/1	270								Stratos 50/6 240	6/10	1	50	240	1x F04	9
T 3-42	6/10	3/1	270								Stratos 50/6 240	6/10	1	50	240	1x F04	9
T 3-48	6/10	3/1	270								Stratos 50/6 240	6/10	1	50	240	1x F04	9
TB 1-6	6/10	3/1	165								Stratos 50/6 240	6/10	1	50	240	RA	9
DN 65																	
B 460	6/10	3/1	340								Stratos 65/9 280	6/10	1	65	280	2x F11	9
B 470	6/10	3/1	340								Stratos 65/9 280	6/10	1	65	280	2x F11	9
BN 340 / B 340	6/10	3/1	340								Stratos 65/9 280	6/10	1	65	280	2x F11	9
C 20	6/10	3/1	300								Stratos 65/9 280	6/10	1	65	280	1x F10	9
EB 340	6/10	3/1	340								Stratos 65/9 280	6/10	1	65	280	2x F11	9
EB 410	6/10	3/1	340								Stratos 65/9 280	6/10	1	65	280	2x F11	9
P 3/4	6/10	3/1	425								Stratos 65/9 280	6/10	1	65	280	1xF09 / 1xF41	9
R 54	6/10	3/1	425								Stratos 65/9 280	6/10	1	65	280	1xF09 / 1xF41	9
R 54 S	6/10	3/1	425								Stratos 65/9 280	6/10	1	65	280	1xF09 / 1xF41	9
R 541	6/10	3/1	425								Stratos 65/9 280	6/10	1	65	280	1xF09 / 1xF41	9
T 4-57	6/10	3/1	340								Stratos 65/9 280	6/10	1	65	280	2x F11	9
T 4-66	6/10	3/1	340								Stratos 65/9 280	6/10	1	65	280	2x F11	9
T 4-75	6/10	3/1	340								Stratos 65/9 280	6/10	1	65	280	2x F11	9

Cuenod				Hoval													
Type	PN	M	L	Type	PN	M	G/DN	L	AGS	Rem.	Type	PN	M	G/DN	L	AGS	Rem.
DN 80																	
B 585	6	3/1	410	Stratos 80/12 360	6	1	PN6	360	RA	9	Stratos 80/12 360	10	1	PN10	360	RA	9
C 30	6	3/1	375	Stratos 80/12 360	6	1	PN6	360	RA	9	Stratos 80/12 360	10	1	PN10	360	RA	9
EB 470	6	3/1	380	Stratos 80/12 360	6	1	PN6	360	1x F17	9	Stratos 80/12 360	10	1	PN10	360	1x F17	9
EB 5110	6	3/1	380	Stratos 80/12 360	6	1	PN6	360	1x F17	9	Stratos 80/12 360	10	1	PN10	360	1x F17	9
EB 585	6	3/1	380	Stratos 80/12 360	6	1	PN6	360	1x F17	9	Stratos 80/12 360	10	1	PN10	360	1x F17	9
ERB 335	6	3/1	360	Stratos 80/12 360	6	1	PN6	360	-	9	Stratos 80/12 360	10	1	PN10	360	-	9
PM 5-75	6	3/1	450	Stratos 80/12 360	6	1	PN6	360	RA	9	Stratos 80/12 360	10	1	PN10	360	RA	9
PM 5-85	6	3/1	450	Stratos 80/12 360	6	1	PN6	360	RA	9	Stratos 80/12 360	10	1	PN10	360	RA	9
PM 5-95	6	3/1	450	Stratos 80/12 360	6	1	PN6	360	RA	9	Stratos 80/12 360	10	1	PN10	360	RA	9
R 64	6	3/1	450	Stratos 80/12 360	6	1	PN6	360	RA	9	Stratos 80/12 360	10	1	PN10	360	RA	9
R 641	6	3/1	450	Stratos 80/12 360	6	1	PN6	360	RA	9	Stratos 80/12 360	10	1	PN10	360	RA	9
R 642	6	3/1	450	Stratos 80/12 360	6	1	PN6	360	RA	9	Stratos 80/12 360	10	1	PN10	360	RA	9
RB 335	6	3/1	360	Stratos 80/12 360	6	1	PN6	360	-	9	Stratos 80/12 360	10	1	PN10	360	-	9
T 5-75	6	3/1	410	Stratos 80/12 360	6	1	PN6	360	RA	9	Stratos 80/12 360	10	1	PN10	360	RA	9
T 5-85	6	3/1	410	Stratos 80/12 360	6	1	PN6	360	RA	9	Stratos 80/12 360	10	1	PN10	360	RA	9
TB 3-28	6	3	330	Stratos 80/12 360	6	1	PN6	360	RA	9	Stratos 80/12 360	10	1	PN10	360	RA	9
DN 100																	
TB 4-42	6	3/1	400	Stratos 100/12 360	6	1	PN6	360	RA	9	Stratos 100/12 360	10	1	PN10	360	RA	9

EMB (Wilo Switzerland)				Hoval													
Type	PN	M	L	Type	PN	M	G/DN	L	AGS	Rem.	Type	PN	M	G/DN	L	AGS	Rem.
Heating circulating pumps																	
G 1½ (Rp 1)																	
BVO/MS	10	3/1	180	HSP 25/6 180 SMO	6	1	G1½	180	-	9	Stratos Pico 25/6 180	6	1	G1½	180	-	9
Dual 0/S	10	3/1	180	HSP 25/6 180 SMO	6	1	G1½	180	-	9	Stratos Pico 25/6 180	6	1	G1½	180	-	9
E 25/1-3	10	1	180	HSP 25/4 180 SMO	6	1	G1½	180	-		Stratos Pico 25/4 180	6	1	G1½	180	-	
E 25/1-5	10	1	180	HSP 25/6 180 SMO	6	1	G1½	180	-		Stratos Pico 25/6 180	6	1	G1½	180	-	
E 25/2	10	1	180	HSP 25/6 180 SMO	6	1	G1½	180	-		Stratos Pico 25/6 180	6	1	G1½	180	-	
G Dual 0/S	10	3/1	180	HSP 25/4 180 SMO	6	1	G1½	180	-	9	Stratos Pico 25/4 180	6	1	G1½	180	-	9
NL 25-14	10	3/1	180	HSP 25/4 180 SMO	6	1	G1½	180	-	9	Stratos Pico 25/4 180	6	1	G1½	180	-	9
NL 25-18	10	3/1	180	HSP 25/4 180 SMO	6	1	G1½	180	-	9	Stratos Pico 25/4 180	6	1	G1½	180	-	9
NL 25-35	10	3/1	180	SPS-I 25/8 180	10	1	G1½	180	-	9	Stratos 25/8 180	10	1	G1½	180	-	9
NLVE 0	10	3	180	SPS-I 25/8 180	10	1	G1½	180	-	9	Stratos 25/6 180	10	1	G1½	180	-	9
NS 25-25	10	3/1	180	HSP 25/4 180 SMO	6	1	G1½	180	-	9	Stratos Pico 25/4 180	6	1	G1½	180	-	9
NS 25-35	10	3/1	180	HSP 25/4 180 SMO	6	1	G1½	180	-	9	Stratos Pico 25/4 180	6	1	G1½	180	-	9
NS 25-35s	10	3/1	130	HSP 15/4 130 SMO	6	1	G1	130	1x PAS12	9	Stratos Pico 25/4 130	6	1	G1½	130	-	9
NS 25-55	10	3/1	180	HSP 25/6 180 SMO	6	1	G1½	180	-	9	Stratos Pico 25/6 180	6	1	G1½	130	-	9
NS 25-55s	10	3/1	130	HSP 15/6 130 SMO	6	1	G1	130	1x PAS12	9	Stratos Pico 25/6 130	6	1	G1½	130	-	9
NS 25-75	10	3/1	180	SPS-S 25/7.5 180	10	1	G1½	180	-	9	Stratos 25/8 180	10	1	G1½	180	-	9
NZF 0 spez./60	10	3/1	190	HSP 25/4 180 SMO	6	1	G1½	180	RA	9	Stratos Pico 25/4 180	6	1	G1½	180	RA	9
NZF 0 spez./64	10	3/1	190	HSP 25/4 180 SMO	6	1	G1½	180	RA	9	Stratos Pico 25/4 180	6	1	G1½	180	RA	9
NZF 0 spez./68	10	3/1	190	HSP 25/4 180 SMO	6	1	G1½	180	RA	9	Stratos Pico 25/4 180	6	1	G1½	180	RA	9
NZF 0 spez./72	10	3/1	190	HSP 25/4 180 SMO	6	1	G1½	180	RA	9	Stratos Pico 25/4 180	6	1	G1½	180	RA	9
NZF 0/100	10	3/1	180	HSP 25/4 180 SMO	6	1	G1½	180	-	9	Stratos Pico 25/4 180	6	1	G1½	180	-	9
NZF 0/88	10	3/1	190	HSP 25/4 180 SMO	6	1	G1½	180	RA	9	Stratos Pico 25/4 180	6	1	G1½	180	RA	9
NZF 0/92	10	3/1	180	HSP 25/4 180 SMO	6	1	G1½	180	-	9	Stratos Pico 25/4 180	6	1	G1½	180	-	9
NZF 0/96	10	3/1	180	HSP 25/4 180 SMO	6	1	G1½	180	-	9	Stratos Pico 25/4 180	6	1	G1½	180	-	9
RP 25/60-2	10	1	180	HSP 25/4 180 SMO	6	1	G1½	180	-		Stratos Pico 25/4 180	6	1	G1½	180	-	
RS 25/2 E (En)	10	1	180	HSP 25/4 180 SMO	6	1	G1½	180	-		Stratos Pico 25/4 180	6	1	G1½	180	-	
RS 25/3 E (En)	10	1	180	HSP 25/4 180 SMO	6	1	G1½	180	-		Stratos Pico 25/4 180	6	1	G1½	180	-	
RS 25/4	10	1	180	HSP 25/4 180 SMO	6	1	G1½	180	-		Stratos Pico 25/4 180	6	1	G1½	180	-	
RS 25/4-130	10	1	130	HSP 15/4 130 SMO	6	1	G1	130	1x PAS12		Stratos Pico 25/4 130	6	1	G1½	130	-	
RS 25/6	10	1	180	HSP 25/6 180 SMO	6	1	G1½	180	-		Stratos Pico 25/6 180	6	1	G1½	180	-	
RS 25/6-130	10	1	130	HSP 15/6 130 SMO	6	1	G1	130	1x PAS12		Stratos Pico 25/6 130	6	1	G1½	130	-	
RSE 15/4-130	10	1	130	HSP 15/4 130 SMO	6	1	G1	130	1x PAS12		Stratos Pico 25/4 130	6	1	G1½	130	-	
RSE 15/6-130	10	1	130	HSP 15/6 130 SMO	6	1	G1	130	1x PAS12		Stratos Pico 25/6 130	6	1	G1½	130	-	
RSE 25 (EN)	10	3/1	180	HSP 25/6 180 SMO	6	1	G1½	180	-	9	Stratos Pico 25/6 180	6	1	G1½	180	-	9
RSE 25/4	10	1	180	HSP 25/4 180 SMO	6	1	G1½	180	-		Stratos Pico 25/4 180	6	1	G1½	180	-	
RSE 25/4-130	10	1	130	HSP 15/4 130 SMO	6	1	G1	130	1x PAS12		Stratos Pico 25/4 130	6	1	G1½	130	-	
RSE 25/6	10	1	180	HSP 25/6 180 SMO	6	1	G1½	180	-		Stratos Pico 25/6 180	6	1	G1½	180	-	
RSE 25/6-130	10	1	130	HSP 15/6 130 SMO	6	1	G1	130	1x PAS12		Stratos Pico 25/6 130	6	1	G1½	130	-	
Star-E 25/1-3	10	1	180	HSP 25/4 180 SMO	6	1	G1½	180	-		Stratos Pico 25/4 180	6	1	G1½	180	-	
Star-E 25/1-5	10	1	180	HSP 25/6 180 SMO	6	1	G1½	180	-		Stratos Pico 25/6 180	6	1	G1½	180	-	
Star-E 25/1-5 IS	10	1	180	HSP 25/6 180 SMO	6	1	G1½	180	-		Stratos Pico 25/6 180	6	1	G1½	180	-	
Star-E 25/1-5 ISSM	10	1	180	SPS-I 25/8 180	10	1	G1½	180	-		Stratos 25/4 180	10	1	G1½	180	-	
Star-E 25/1-5 SSM	10	1	180	SPS-I 25/8 180	10	1	G1½	180	-		Stratos 25/4 180	10	1	G1½	180	-	
Star-E 25/1-2	10	1	180	HSP 25/4 180 SMO	6	1	G1½	180	-		Stratos Pico 25/4 180	6	1	G1½	180	-	
Simplex 25/0.5-7	10	1	180	SPS-I 25/8 180	10	1	G1½	180	-		Stratos 25/8 180	10	1	G1½	180	-	
Simplex 25/0.5-10	10	1	180	SPS-I 25/12 180	10	1	G1½	180	-		Stratos 25/10 180	10	1	G1½	180	-	
Simplex 25/0.5-12	10	1	180	SPS-I 25/12 180	10	1	G1½	180	-		Stratos 25/12 180	10	1	G1½	180	-	
Simplex Micra 25/1-4 180	10	1	180	HSP 25/4 180 SMO	6	1	G1½	180	-		Stratos Pico 25/4 180	6	1	G1½	180	-	
Simplex Micra 25/1-4 130	10	1	130	HSP 15/4 130 SMO	6	1	G1	130	1x PAS12		Stratos Pico 25/4 130	6	1	G1½	130	-	
Simplex Micra 25/1-6 180	10	1	180	HSP 25/6 180 SMO	6	1	G1½	180	-		Stratos Pico 25/6 180	6	1	G1½	180	-	
Simplex Micra 25/1-6 130	10	1	130	HSP 15/6 130 SMO	6	1	G1	130	1x PAS12		Stratos Pico 25/6 130	6	1	G1½	130	-	
Stratos 25/1-4	10	1	180	SPS-I 25/8 180	10	1	G1½	180	-	14	Stratos 25/4 180	10	1	G1½	180	-	14
Stratos 25/1-6	10	1	180	SPS-I 25/8 180	10	1	G1½	180	-	14	Stratos 25/6 180	10	1	G1½	180	-	14
Stratos 25/1-8	10	1	180	SPS-I 25/8 180	10	1	G1½	180	-	14	Stratos 25/8 180	10	1	G1½	180	-	14
Stratos 25/1-10	10	1	180	SPS-I 25/12 180	10	1	G1½	180	-	14	Stratos 25/10 180	10	1	G1½	180	-	14
Stratos 25/1-12	10	1	180	SPS-I 25/12 180	10	1	G1½	180	-	14	Stratos 25/12 180	10	1	G1½	180	-	14
Stratos Micra 25/1-4	10	1	180	HSP 25/4 180 SMO	6	1	G1½	180	-		Stratos Pico 25/4 180	6	1	G1½	180	-	
Stratos Micra 25/1-4 130	10	1	130	HSP 15/4 130 SMO	6	1	G1	130	1x PAS12		Stratos Pico 25/4 130	6	1	G1½	130	-	
Stratos Micra 25/1-6	10	1	180	HSP 25/6 180 SMO	6	1	G1½	180	-		Stratos Pico 25/6 180	6	1	G1½	180	-	
Stratos Micra 25/1-6 130	10	1	130	HSP 15/6 130 SMO	6	1	G1	130	1x PAS12		Stratos Pico 25/6 130	6	1	G1½	130	-	
Top-E 25/1-7	10	1	180	SPS-I 25/8 180	10	1	G1½	180	-		Stratos 25/6 180	10	1	G1½	180	-	
Top-EV 25/1-7	10	1	280	SPS-I 25/8 180	10	1	G1½	180	RA		Stratos 25/6 180	10	1	G1½	180	RA	
Top-RS 25/7	10	3/1	180	SPS-I 25/8 180	10	1	G1½	180	-	9	Stratos 25/8 180	10	1	G1½	180	-	9
Top-S 25/5	10	3/1	180	SPS-I 25/8 180	10	1	G1½	180	-	9	Stratos 25/6 180	10	1	G1½	180	-	9
Top-S 25/7	10	3/1	180	SPS-I 25/8 180	10	1	G1½	180	-	9	Stratos 25/8 180	10	1	G1½	180	-	9
Top-S 25/10	10	3/1	180	SPS-I 25/12 180	10	1	G1½	180	-	9	Stratos 25/10 180	10	1	G1½	180	-	9
Top-S 25/13	10	3/1	180	SPS-I 25/12 180	10	1	G1½	180	-	9	Stratos 25/12 180	10	1	G1½	180	-	9
Top-SV 25/7	10	3/1	280	SPS-I 25/8 180	10	1	G1½	180	RA	9	Stratos 25/8 180	10	1	G1½	180	RA	9
G 2 (Rp 1¼)																	
BV 0	10	3/1	190	HSP 25/6 180 SMO	6	1	G1½	180	2x R05	9	Stratos Pico 25/6 180	6	1	G1½	180	2x R05	9
BV 0/M	10	3/1	180	HSP 30/6 180 SMO	6	1	G2	180	-	9	Stratos Pico 30/6 180	6	1	G2	180	-	9
BV 0/MR	10	3/1	180	HSP 30/6 180 SMO	6	1	G2	180	-	9	Stratos Pico 30/6 180	6	1	G2	180	-	9
BV-0	10	3/1	180	HSP 30/6 180 SMO	6	1	G2	180	-	9	Stratos Pico 30/6 180	6	1	G2	180	-	9
BV-0/M	10	3/1	190	HSP 25/6 180 SMO	6	1	G1½	180	2x R05	9	Stratos Pico 25/6 180	6	1	G1½	180	2x R05	9
BV-0/R	10	3/1	180	HSP 30/6 180 SMO	6	1	G2	180	-	9	Stratos Pico 30/6 180	6	1	G2	180	-	9
Dual-0	10	3/1	180	HSP 30/6 180 SMO	6	1	G2	180	-	9	Stratos Pico 30/6 180	6	1	G2	180	-	9
E 14... E 59	10	3/1	190	HSP 25/6 180 SMO	6	1	G1½	180	2x R05	9	Stratos 25/8 180	6	1	G1½	180	2x R05	9

EMB (Wilo Switzerland)				Hoval													
Type	PN	M	L	Type	PN	M	G/DN	L	AGS	Rem.	Type	PN	M	G/DN	L	AGS	Rem.
E 30/1-3	10	1	180	HSP 30/4 180 SMO	6	1	G2	180	-		Stratos Pico 30/4 180	6	1	G2	180	-	
E 30/1-5	10	1	180	HSP 30/6 180 SMO	6	1	G2	180	-		Stratos Pico 30/6 180	6	1	G2	180	-	
EV 5/4"-2/45	10	3	180														
EV 5/4"-3/13	10	3	160	HSP 30/4 180 SMO	6	1	G2	180	RA	9	Stratos Pico 30/4 180	6	1	G2	180	RA	9
EV 5/4"-3/35	10	3	210	HSP 30/4 180 SMO	6	1	G2	180	1x R10	9	Stratos Pico 30/4 180	6	1	G2	180	1x R10	9
Eco-Star 25/1-5-130	10	1	130	HSP 15/6 130 SMO	10	1	G1	130	RA		Stratos Pico 25/6 130	6	1	G1½	130	RA	
G-Dual-0	10	3/1	180	HSP 30/6 180 SMO	6	1	G2	180	-	9	Stratos Pico 30/6 180	6	1	G2	180	-	9
NA 0/66.../60	10	3	190	HSP 25/6 180 SMO	6	1	G1½	180	2x R05	9	Stratos 25/8 180	6	1	G1½	180	2x R05	9
NE	10	3	160	HSP 30/4 180 SMO	6	1	G2	180	RA	9	Stratos Pico 30/4 180	6	1	G2	180	RA	9
NE 1	10	3	160	HSP 30/4 180 SMO	6	1	G2	180	RA	9	Stratos Pico 30/4 180	6	1	G2	180	RA	9
NE 49	10	3	160	HSP 30/4 180 SMO	6	1	G2	180	RA	9	Stratos Pico 30/4 180	6	1	G2	180	RA	9
NL 0/90…/72	10	3	190	HSP 25/4 180 SMO	6	1	G1½	180	2x R05	9	Stratos Pico 25/4 180	6	1	G1½	180	2x R05	9
NL 30-5	10	3	206	HSP 30/6 180 SMO	6	1	G2	180	RA	9	Stratos Pico 30/4 180	6	1	G2	180	RA	9
NL 30-15	10	3/1	160	SPS-A 25/6 130 SMO	6	1	G1½	130	2x R06	9	Stratos Pico 25/6 130	6	1	G1½	130	2x R06	9
NL 30-18	10	3/1	180	HSP 30/6 180 SMO	6	1	G2	180	-	9	Stratos Pico 30/6 180	6	1	G2	180	-	9
NL 30-35	10	3/1	180	SPS-I 30/8 180	10	1	G2	180	-	9	Stratos 30/8 180	6	1	G2	180	-	9
NLA 0/100…/110	10	3/1	210	HSP 30/6 180 SMO	6	1	G2	180	1x R10	9	Stratos Pico 30/6 180	6	1	G2	180	1x R10	9
NLAV-0/R	10	3/1	160	HSP 30/6 180 SMO	6	1	G2	180	RA	9	Stratos Pico 30/6 180	6	1	G2	180	RA	9
NLV-0	10	3/1	160	SPS-A 25/6 130 SMO	6	1	G1½	130	2x R06	9	Stratos Pico 25/6 130	6	1	G1½	130	2x R06	9
NLV 1-0	10	3/1	210	HSP 30/6 180 SMO	6	1	G2	180	1x R10	9	Stratos Pico 30/6 180	6	1	G2	180	1x R10	9
NLVK	10	3/1	160	SPS-A 25/6 130 SMO	6	1	G1½	130	2x R06	9	Stratos Pico 25/6 130	6	1	G1½	130	2x R06	9
NLVK-80	10	3/1	160	SPS-A 25/6 130 SMO	6	1	G1½	130	2x R06	9	Stratos Pico 25/6 130	6	1	G1½	130	2x R06	9
NLVK-Mini	10	3/1	160	SPS-A 25/6 130 SMO	6	1	G1½	130	2x R06	9	Stratos Pico 25/6 130	6	1	G1½	130	2x R06	9
NRK spez. /55…/65	10	3/1	160	SPS-A 25/4 130 SMO	6	1	G1½	130	2x R06	9	Stratos Pico 25/4 130	6	1	G1½	130	2x R06	9
NRK 55...75	10	3/1	160	SPS-A 25/6 130 SMO	6	1	G1½	130	2x R06	9	Stratos Pico 25/6 130	6	1	G1½	130	2x R06	9
NE/NS	10	3/1	160	SPS-A 25/4 130 SMO	6	1	G1½	130	2x R06	9	Stratos Pico 25/4 130	6	1	G1½	130	2x R06	9
NS 30-25	10	3/1	180	SPS-I 30/8 180	10	1	G2	180	-	9	Stratos 30/4 180	10	1	G2	180	-	9
NS 30-35	10	3/1	180	SPS-I 30/8 180	10	1	G2	180	-	9	Stratos 30/4 180	10	1	G2	180	-	9
NS 30-55	10	3/1	180	HSP 30/6 180 SMO	6	1	G2	180	-	9	Stratos Pico 30/6 180	6	1	G2	180	-	9
NS 30-75	10	3/1	180	SPS-I 30/8 180	10	1	G2	180	-	9	Stratos 30/8 180	6	1	G2	180	-	9
NS 30-110	10	3/1	180	SPS-I 30/12 180	10	1	G2	180	-	9	Stratos 30/12 180	10	1	G2	180	-	9
NUE 0/61…/75	10	3/1	180	SPS-I 30/12 180	10	1	G2	180	-	9	Stratos 30/12 180	10	1	G2	180	-	9
NZ 0 spez./48…/54	10	3/1	190	HSP 25/6 180 SMO	6	1	G1½	180	2x R05	9	Stratos Pico 25/6 180	6	1	G1½	180	2x R05	9
NZF 1 spez./70…/89	10	3/1	220	SPS-I 30/8 180	10	1	G2	180	1x R14	9	Stratos 30/8 180	6	1	G2	180	1x R14	9
NZF 1/90…/120	10	3/1	220	HSP 30/6 180 SMO	6	1	G2	180	1x R14	9	Stratos Pico 30/6 180	6	1	G2	180	1x R14	9
RS 30/2	10	1	180	HSP 30/4 180 SMO	6	1	G2	180	-		Stratos Pico 30/4 180	6	1	G2	180	-	
RS 30/4	10	1	180	HSP 30/4 180 SMO	6	1	G2	180	-		Stratos Pico 30/4 180	6	1	G2	180	-	
RS 30/6	10	1	180	HSP 30/6 180 SMO	6	1	G2	180	-		Stratos Pico 30/6 180	6	1	G2	180	-	
RSE 30/4	10	1	180	HSP 30/4 180 SMO	6	1	G2	180	-		Stratos Pico 30/4 180	6	1	G2	180	-	
RSE 30/6	10	1	180	HSP 30/6 180 SMO	6	1	G2	180	-		Stratos Pico 30/6 180	6	1	G2	180	-	
Simplex 30/0.5-7	10	1	180	SPS-I 30/8 180	10	1	G2	180	-		Stratos 30/8 180	10	1	G2	180	-	
Simplex 30/0.5-10	10	1	180	SPS-I 30/12 180	10	1	G2	180	-		Stratos 30/10 180	10	1	G2	180	-	
Simplex 30/0.5-12	10	1	180	SPS-I 30/12 180	10	1	G2	180	-		Stratos 30/12 180	10	1	G2	180	-	
Simplex Micra 30/1-4 180	10	1	180	HSP 30/4 180 SMO	6	1	G2	180	-		Stratos Pico 30/4 180	6	1	G2	180	-	
Simplex Micra 30/1-6 180	10	1	180	HSP 30/6 180 SMO	6	1	G2	180	-		Stratos Pico 30/6 180	6	1	G2	180	-	
Star-E 30/1-3	10	1	180	HSP 30/4 180 SMO	6	1	G2	180	-		Stratos Pico 30/4 180	6	1	G2	180	-	
Star-E 30/1-5	10	1	180	HSP 30/6 180 SMO	6	1	G2	180	-		Stratos Pico 30/6 180	6	1	G2	180	-	
Star-E 30/1-5 IS	10	1	180	HSP 30/6 180 SMO	6	1	G2	180	-		Stratos Pico 30/6 180	6	1	G2	180	-	
Star-E 30/1-5 ISSM	10	1	180								Stratos 30/6 180	10	1	G2	180	-	14
Star-E 30/1-5 SSM	10	1	180								Stratos 30/6 180	10	1	G2	180	-	14
Stratos 30/1-4	10	1	180	SPS-I 30/8 180	10	1	G2	180	-		Stratos 30/4 180	10	1	G2	180	-	
Stratos 30/1-6	10	1	180	SPS-I 30/8 180	10	1	G2	180	-		Stratos 30/6 180	10	1	G2	180	-	
Stratos 30/1-8	10	1	180	SPS-I 30/8 180	10	1	G2	180	-		Stratos 30/8 180	10	1	G2	180	-	
Stratos 30/1-10	10	1	180	SPS-I 30/12 180	10	1	G2	180	-		Stratos 30/10 180	10	1	G2	180	-	
Stratos 30/1-12	10	1	180	SPS-I 30/12 180	10	1	G2	180	-		Stratos 30/12 180	10	1	G2	180	-	
Stratos Eco 30/1-3	10	1	180	HSP 30/4 180 SMO	6	1	G2	180	-		Stratos Pico 30/4 180	6	1	G2	180	-	
Stratos Eco 30/1-5	10	1	180	HSP 30/6 180 SMO	6	1	G2	180	-		Stratos Pico 30/6 180	6	1	G2	180	-	
Stratos Eco 30/1-5 BMS	10	1	180	HSP 30/6 180 SMO	6	1	G2	180	-		Stratos 30/4 180	10	1	G2	180	-	
Stratos Micra 30/1-4	10	1	180	HSP 30/4 180 SMO	6	1	G2	180	-		Stratos Pico 30/4 180	6	1	G2	180	-	
Stratos Micra 30/1-6	10	1	180	HSP 30/6 180 SMO	6	1	G2	180	-		Stratos Pico 30/6 180	6	1	G2	180	-	
Top-E 30/1-7	10	1	180	SPS-I 30/8 180	10	1	G2	180	-		Stratos 30/8 180	10	1	G2	180	-	
Top-E 30/1-10	10	1	180	SPS-I 30/12 180	10	1	G2	180	-		Stratos 30/12 180	10	1	G2	180	-	
Top-EV 30/1-7	10	1	280	SPS-I 30/8 180	10	1	G2	180	-		Stratos 30/6 180	10	1	G2	180	-	
Top-NL 30	10	3/1	180	SPS-I 30/8 180	10	1	G2	180	-	9	Stratos 30/6 180	10	1	G2	180	-	9
Top-RS 30/7	10	3/1	180	SPS-I 30/8 180	10	1	G2	180	-	9	Stratos 30/8 180	10	1	G2	180	-	9
Top-RS 30/10	10	3/1	180	SPS-I 30/12 180	10	1	G2	180	-	9	Stratos 30/10 180	10	1	G2	180	-	9
Top-S 30/4	10	3/1	180	SPS-I 30/8 180	10	1	G2	180	-	9	Stratos 30/8 180	10	1	G2	180	-	9
Top-S 30/5	10	3/1	180	SPS-I 30/8 180	10	1	G2	180	-	9	Stratos 30/8 180	10	1	G2	180	-	9
Top-S 30/7	10	3/1	180	SPS-I 30/8 180	10	1	G2	180	-	9	Stratos 30/8 180	10	1	G2	180	-	9
Top-S 30/10	10	3/1	180	SPS-I 30/12 180	10	1	G2	180	-	9	Stratos 30/10 180	10	1	G2	180	-	9
Top-SV 30/7	10	3/1	280	SPS-I 30/8 180	10	1	G2	180	RA	9	Stratos 30/8 180	10	1	G2	180	RA	9
Z 0	10	3	190	SPS-I 25/8 180	10	1	G1½	180	2x R05	9	Stratos 25/4 180	10	1	G1½	180	2x R05	9
Z 0/59	10	3	190	SPS-I 25/8 180	10	1	G1½	180	2x R05	9	Stratos 25/4 180	10	1	G1½	180	2x R05	9
Z 109	10	3	224	SPS-I 30/8 180	10	1	G2	180	RA	9	Stratos 30/4 180	10	1	G2	180	RA	9
Z 114	10	3	224	SPS-I 30/8 180	10	1	G2	180	RA	9	Stratos 30/4 180	10	1	G2	180	RA	9
Z 114/85	10	3	224	SPS-I 30/8 180	10	1	G2	180	RA	9	Stratos 30/4 180	10	1	G2	180	RA	9
Z 127	10	3	224	SPS-I 30/8 180	10	1	G2	180	RA	9	Stratos 30/4 180	10	1	G2	180	RA	9

EMB (Wilo Switzerland)				Hoval													
Type	PN	M	L	Type	PN	M	G/DN	L	AGS	Rem.	Type	PN	M	G/DN	L	AGS	Rem.
DN 32																	
NLAD 0/100…/110	10	3/1	270	HSP 30/6 180 SMO	6	1	G2	180	RA		Stratos Pico 30/6 180	6	1	G2	180	RA	
NLAVD 0/R	10	3/1	220	HSP 30/6 180 SMO	6	1	G2	180	2x RF03		Stratos Pico 30/6 180	6	1	G2	180	2x RF03	
Stratos 32/1-10	6/10	1	220	SPS-I 30/12 180	10	1	G2	180	2x RF03	14	Stratos 32/1-10	6/10	1	32	220		14
Stratos 32/1-12	6/10	1	220	SPS-I 30/12 180	10	1	G2	180	2x RF03	14	Stratos 32/1-12	6/10	1	32	220		14
DN 40																	
E 40/1-5	10	1	220	SPS-I 30/8 180	10	1	G2	180	1xR08 / 2xRF12		Stratos 40/4 220	6/10	1	40	220	-	
E 40-4/19	10	3	250	SPS-I 30/8 180	10	1	G2	180	2xRF12 / 1xF26	9	Stratos 40/8 220	6/10	1	40	220	1x F01	9
E 40-5/30	10	3	320	SPS-I 40/8 220	10	1	40	220	2x F26	9	Stratos 40/8 220	6/10	1	40	220	2x F26	9
E 40-5/55	10	3	320								Stratos 40/12 250	6/10	1	40	250	RA	9
NL 1/100…/110	6	3/1	250	SPS-I 40/8 220	10	1	40	220	1x F01	9	Stratos 40/4 220	6/10	1	40	220	1x F01	9
NL 1/90	6	3/1	250	SPS-I 40/8 220	10	1	40	220	1x F01	9							9
NL 1-1	6	3/1	250	SPS-I 40/8 220	10	1	40	220	1x F01	9	Stratos 40/4 220	6/10	1	40	220	1x F01	9
NL 1-2	6	3/1	250	SPS-I 40/8 220	10	1	40	220	1x F01	9	Stratos 40/4 220	6/10	1	40	220	1x F01	9
NL 1-3	6	3/1	250	SPS-I 40/8 220	10	1	40	220	1x F01	9							9
NL 1-15	6	3/1	220	SPS-I 30/8 180	10	1	G2	180	1xR08 / 2xRF12	9	Stratos 40/4 220	6/10	1	40	220	-	9
NL 1-30	6	3/1	250	SPS-I 40/8 220	10	1	40	220	1x F01	9	Stratos 40/4 220	6/10	1	40	220	1x F01	9
NL 1-70	6	3	320	SPS-I 40/8 220	10	1	40	220	1x F26	9	Stratos 40/8 220	6/10	1	40	220	2x F26	9
NL 1-8	6	3/1	220	HSP 25/6 180 SMO	6	1	G1½	180	2x RF09	9	Stratos Pico 25/4 180	6	1	G1½	180	2x RF09	9
NLD 1-15	10	3/1	220	SPS-I 30/8 180	10	1	G2	180	1xR08 / 2xRF12	9	Stratos 40/4 220	6/10	1	40	220	-	9
NLA 1/113	6	3/1	270	SPS-I 40/8 220	10	1	40	220	1x F26	9	Stratos 40/4 220	6/10	1	40	220	1x F26	9
NLA 1/125	6	3/1	270	SPS-I 40/8 220	10	1	40	220	1x F26	9	Stratos 40/4 220	6/10	1	40	220	1x F26	9
NLA 1-1	6	3	320	SPS-I 40/8 220	10	1	40	220	2x F26	9							9
NLA 1-2	6	3	320	SPS-I 40/8 220	10	1	40	220	2x F26	9	Stratos 40/4 220	6/10	1	40	220	2x F26	9
NLA 1-3	6	3	320	SPS-I 40/8 220	10	1	40	220	2x F26	9	Stratos 40/4 220	6/10	1	40	220	2x F26	9
NLAD 1/113	10	3	300	SPS-I 40/8 220	10	1	40	220	1xF01 / 1xF26	9							9
NLAD 1/125	10	3	300	SPS-I 40/8 220	10	1	40	220	1xF01 / 1xF26	9	Stratos 40/4 220	6/10	1	40	220	1xF01 / 1xF26	9
NLAD 1-1	10	3	320	SPS-I 40/8 220	10	1	40	220	2x F26	9							9
NLAD 1-2	10	3	320	SPS-I 40/8 220	10	1	40	220	2x F26	9	Stratos 40/4 220	6/10	1	40	220	2x F26	9
NLAD 1-3	10	3	320	SPS-I 40/8 220	10	1	40	220	2x F26	9	Stratos 40/4 220	6/10	1	40	220	2x F26	9
NLD 1/100…/110	10	3	300	SPS-I 40/8 220	10	1	40	220	1xF01 / 1xF26	9	Stratos 40/4 220	6/10	1	40	220	1xF01 / 1xF26	9
NLD 1/90	10	3	250	SPS-I 40/8 220	10	1	40	220	1x F01	9							9
NLD 1-1	10	3	250	SPS-I 40/8 220	10	1	40	220	1x F01	9	Stratos 40/4 220	6/10	1	40	220	1x F01	9
NLD 1-2	10	3	250	SPS-I 40/8 220	10	1	40	220	1x F01	9	Stratos 40/4 220	6/10	1	40	220	1x F01	9
NLD 1-3	10	3	250	SPS-I 40/8 220	10	1	40	220	1x F01	9							9
NLD 1-30	10	3/1	250	SPS-I 40/8 220	10	1	40	220	1x F01	9	Stratos 40/4 220	6/10	1	40	220	1x F01	9
NLD 1-70	10	3	320	SPS-I 40/8 220	10	1	40	220	2x F26	9	Stratos 40/8 220	6/10	1	40	220	2x F26	9
NLD 1-8	10	3	220	SPS-I 30/8 180	10	1	G2	180	1xR08 / 2xRF12	9	Stratos 40/8 220	6/10	1	40	220	-	9
NLV 1/110	10	3/1	250	SPS-I 40/8 220	10	1	40	220	1x F01	9	Stratos 40/4 220	6/10	1	40	220	1x F01	9
NS 1-55	6	3/1	220	SPS-I 30/8 180	10	1	G2	180	1xR08 / 2xRF12	9	Stratos 40/4 220	6/10	1	40	220	-	9
NS 1-80	6	3/1	250	SPS-I 40/8 220	10	1	40	220	1x F01	9							9
NSD 1-55	10	3	220	SPS-I 30/8 180	10	1	G2	180	1xR08 / 2xRF12	9	Stratos 40/4 220	6/10	1	40	220	-	9
NSD 1-80	10	3	250	SPS-I 40/8 220	10	1	40	220	1x F01	9							9
NZ 1 spez. /57…/61	6	3	220	SPS-I 30/8 180	10	1	G2	180	1xR08 / 2xRF12	9							9
NZ 1/69…/93	6	3	220	SPS-I 30/8 180	10	1	G2	180	1xR08 / 2xRF12	9							9
NZ 2A 83…/111	6	3	270	SPS-I 40/8 220	10	1	40	220	1x F01	9	Stratos 40/4 220	6/10	1	40	220	1x F26	9
Simplex 40/0.5-4	6/10	1	220	SPS-I 40/8 220	10	1	40	220	-		Stratos 40/4 220	6/10	1	40	220	-	
Simplex 40/0.5-8	6/10	1	220	SPS-I 40/8 220	10	1	40	220	-		Stratos 40/8 220	6/10	1	40	220	-	
Simplex 40/0.5-12	6/10	1	250								Stratos 40/12 250	6/10	1	40	250	-	
Simplex 40/0.5-16	6/10	1	250								Stratos 40/16 250	6/10	1	40	250	-	
Stratos 40/1-4	6/10	1	220	SPS-I 30/8 180	10	1	G2	180	1xR08 / 2xRF12	14	Stratos 40/4 220	6/10	1	40	220	-	14
Stratos 40/1-8	6/10	1	220	SPS-I 30/8 180	10	1	G2	180	1xR08 / 2xRF12	14	Stratos 40/8 220	6/10	1	40	220	-	14
Stratos 40/1-10	6/10	1	220								Stratos 40/10 250	6/10	1	40	220	-	14
Stratos 40/1-12	6/10	1	250								Stratos 40/12 250	6/10	1	40	250	-	14
Stratos 40/1-16	6/10	1	250								Stratos 40/16 250	6/10	1	40	250	-	14
Top 40/10	6/10	3	250	SPS-I 30/12 180	10	1	G2	180	2xRF12 / 1xF26	9	Stratos 40/12 250	6/10	1	40	250	-	9
Top-E 40/1-4	6/10	1	220	SPS-I 30/8 180	10	1	G2	180	1xR08 / 2xRF12		Stratos 40/4 220	6/10	1	40	220	-	
Top-E 40/1-10	6/10	1	250	SPS-I 30/12 180	10	1	G2	180	2xRF12 / 1xF26		Stratos 40/12 250	6/10	1	40	250	-	
Top-NL 40	6/10	3/1	220	HSP 25/6 180 SMO	6	1	G1½	180	2x RF09	9	Stratos Pico 25/6 180	6	1	G1½	180	2x RF09	9
Top-S 40/4	6/10	3/1	220	SPS-I 30/8 180	10	1	G2	180	1xR08 / 2xRF12	9	Stratos 40/4 220	6/10	1	40	220	-	9
Top-S 40/7	6/10	3/1	250	SPS-I 40/8 220	10	1	40	220	1x F01	9	Stratos 40/8 220	6/10	1	40	220	1x F01	9
Top-S 40/10	6/10	3	250								Stratos 40/12 250	6/10	1	40	250	-	9
Top-S 40/15	6/10	3	250								Stratos 40/16 250	6/10	1	40	250	-	9
Z 209	6	3	293	SPS-I 30/8 180	10	1	G2	180	RA	9							9
Z 214	6	3	293	SPS-I 30/8 180	10	1	G2	180	RA	9	Stratos 40/4 220	6/10	1	40	220	RA	9
Z 214/108	6	3	293	SPS-I 30/8 180	10	1	G2	180	RA	9	Stratos 40/4 220	6/10	1	40	220	RA	9
DN 50																	
A 114	10	3	170	SPS-I 30/12 180	10	1	G2	180	RA	9	Stratos 50/10 240	6/10	1	50	240	RA	9
A 127	10	3	170	SPS-I 30/12 180	10	1	G2	180	RA	9	Stratos 50/10 240	6/10	1	50	240	RA	9
E 50/1-7	6	1	240	SPS-I 30/12 180	10	1	G2	180	2xRF05 / 1xF03		Stratos 50/6 240	6/10	1	50	240	-	
EBNL 2-1	6	3/1	270	SPS-I 30/12 180	10	1	G2	180	2xRF06 / 1xF03	9	Stratos 50/6 240	6/10	1	50	240	1x F04	9
EBNL 2-2	6	3/1	270	SPS-I 30/12 180	10	1	G2	180	2xRF06 / 1xF03	9	Stratos 50/6 240	6/10	1	50	240	1x F04	9
EBNL 2-3	6	3/1	270	SPS-I 30/12 180	10	1	G2	180	2xRF06 / 1xF03	9	Stratos 50/6 240	6/10	1	50	240	1x F04	9
EBNU 1	6	3/1	240	SPS-I 30/12 180	10	1	G2	180	2xRF05 / 1xF03	9	Stratos 50/8 240	6/10	1	50	240	-	9
EV 50-5/18	10	3	240	SPS-I 30/12 180	10	1	G2	180	2xRF05 / 1xF03		Stratos 50/10 240	6/10	1	50	240	-	
NA 1/76…/68	6	3	220	SPS-I 30/12 180	10	1	G2	180	RA	9	Stratos 50/10 240	6/10	1	50	240	RA	9
NL 2/106…/130	6	3/1	270	SPS-I 30/12 180	10	1	G2	180	2xRF06 / 1xF03	9	Stratos 50/6 240	6/10	1	50	240	1x F04	9
NL 2-1	6	3/1	280	SPS-I 30/12 180	10	1	G2	180	2xRF06 / 1xF04	9	Stratos 50/6 240	6/10	1	50	240	2x F03	9

EMB (Wilo Switzerland)				Hoval													
Type	PN	M	L	Type	PN	M	G/DN	L	AGS	Rem.	Type	PN	M	G/DN	L	AGS	Rem.
NL 2-2	6	3/1	280	SPS-I 30/12 180	10	1	G2	180	2xRF06 / 1xF04	9	Stratos 50/8 240	6/10	1	50	240	2x F03	9
NL 2-3	6	3/1	280	SPS-I 30/12 180	10	1	G2	180	2xRF06 / 1xF04	9	Stratos 50/8 240	6/10	1	50	240	2x F03	9
NL 2-20	6	3/1	240	SPS-I 30/12 180	10	1	G2	180	2xRF05 / 1xF03	9							
NL 2-35	6	3	280	SPS-I 30/12 180	10	1	G2	180	2xRF06 / 1xF04	9	Stratos 50/6 240	6/10	1	50	240	2x F03	9
NL 2-70	6	3	340								Stratos 50/9 280	6/10	1	50	280	2x F04	9
NL 2-9	6	3	240	SPS-I 30/12 180	10	1	G2	180	2xRF05 / 1xF03	9	Stratos 50/8 240	6/10	1	50	240	-	9
NLA 2/135	6	3	300								Stratos 50/8 240	6/10	1	50	240	2x F04	9
NLA 2/150	6	3	300								Stratos 50/8 240	6/10	1	50	240	2x F04	9
NLA 2-1	6	3	340								Stratos 50/8 240	6/10	1	50	240	RA	9
NLA 2-2	6	3	340								Stratos 50/8 240	6/10	1	50	240	RA	9
NLAD 2/135	10	3	330								Stratos 50/8 240	6/10	1	50	240	RA	9
NLAD 2/150	10	3	330								Stratos 50/8 240	6/10	1	50	240	RA	9
NLAD 2-1	10	3	340								Stratos 50/8 240	6/10	1	50	240	RA	9
NLAD 2-2	10	3	340								Stratos 50/8 240	6/10	1	50	240	RA	9
NLD 2/106…/130	10	3	330								Stratos 50/6 240	6/10	1	50	240	RA	9
NLD 2-1	10	3	280	SPS-I 30/12 180	10	1	G2	180	2xRF06 / 1xF04	9	Stratos 50/6 240	6/10	1	50	240	2x F03	9
NLD 2-140	16	3	440								Stratos-D 50/16 340	6/10	1	50	340	RA	9
NLD 2-2	10	3	280	SPS-I 30/12 180	10	1	G2	180	2xRF06 / 1xF04	9	Stratos 50/6 240	6/10	1	50	240	2x F03	9
NLD 2-3	10	3	280	SPS-I 30/12 180	10	1	G2	180	2xRF06 / 1xF04	9	Stratos 50/6 240	6/10	1	50	240	2x F03	9
NLD 2-20	10	3/1	240	SPS-I 30/12 180	10	1	G2	180	2xRF05 / 1xF03	9							
NLD 2-35	10	3	280	SPS-I 30/12 180	10	1	G2	180	2xRF06 / 1xF04	9	Stratos 50/6 240	6/10	1	50	240	2x F03	9
NLD 2-70	10	3	340								Stratos 50/9 280	6/10	1	50	280	2x F04	9
NLD 2-9	10	3	240	SPS-I 30/12 180	10	1	G2	180	2xRF05 / 1xF03	9	Stratos 50/10 240	6/10	1	50	240	-	9
NS 2-100	6	3	280	SPS-I 30/12 180	10	1	G2	180	2xRF06 / 1xF04	9	Stratos 50/9 280	6/10	1	50	280	-	9
NS 2-110	6	3	280								Stratos 50/12 280	6/10	1	50	280	-	9
NS 2-160	10	3	340								Stratos 50/16 340	6/10	1	50	340	-	9
NS 2-65	6	3	240	SPS-I 30/12 180	10	1	G2	180	2xRF05 / 1xF03	9	Stratos 50/8 240	6/10	1	50	240	-	9
NSD 2-100	10	3	280	SPS-I 30/12 180	10	1	G2	180	2xRF06 / 1xF04	9	Stratos 50/9 280	6/10	1	50	280	-	9
NSD 2-110	10	3	280								Stratos 50/12 280	6/10	1	50	280	-	9
NSD 2-160	10	3	340								Stratos 50/16 340	6/10	1	50	340	-	9
NSD 2-65	10	3	240	SPS-I 30/12 180	10	1	G2	180	2xRF05 / 1xF03	9	Stratos 50/8 240	6/10	1	50	240	-	9
NZ 2 spez. /68…/83	6	3	270	SPS-I 30/12 180	10	1	G2	180	2xRF06 / 1xF03	9	Stratos 50/6 240	6/10	1	50	240	1x F04	9
NZ 2/83…/93	6	3	270	SPS-I 30/12 180	10	1	G2	180	2xRF06 / 1xF03	9							
NZ 2/98…/111	6	3	270	SPS-I 30/12 180	10	1	G2	180	2xRF06 / 1xF03	9	Stratos 50/6 240	6/10	1	50	240	1x F04	9
NZ 3 A/120…/138	6	3	330								Stratos 50/8 240	6/10	1	50	240	RA	9
NZ 3 A/99…/113	6	3	330								Stratos 50/8 240	6/10	1	50	240	RA	9
Simplex 50/0.5-8	6/10	1	240	SPS-I 30/12 180	10	1	G2	180	2xRF05 / 1xF03		Stratos 50/8 240	6/10	1	50	240	-	
Simplex 50/0.5-9	6/10	1	280	SPS-I 30/12 180	10	1	G2	180	2xRF06 / 1xF04		Stratos 50/9 280	6/10	1	50	280	-	
Simplex 50/0.5-12	6/10	1	280								Stratos 50/12 280	6/10	1	50	280	-	
Simplex 50/0.5-16	6/10	1	340								Stratos 50/16 340	6/10	1	50	340	-	
Stratos 50/1-6	6/10	1	240	SPS-I 30/12 180	10	1	G2	180	2xRF05 / 1xF03	14	Stratos 50/6 240	6/10	1	50	240	-	14
Stratos 50/1-8	6/10	1	240	SPS-I 30/12 180	10	1	G2	180	2xRF05 / 1xF03	14	Stratos 50/8 240	6/10	1	50	240	-	14
Stratos 50/1-9	6/10	1	280	SPS-I 30/12 180	10	1	G2	180	2xRF06 / 1xF04	14	Stratos 50/9 280	6/10	1	50	280	-	14
Stratos 50/1-10	6/10	1	240								Stratos 50/10 240	6/10	1	50	240	-	14
Stratos 50/1-12	6/10	1	280								Stratos 50/12 280	6/10	1	50	280	-	14
Stratos 50/1-16	6/10	1	340								Stratos 50/16 340	6/10	1	50	340	-	14
Top 50/7	6/10	3	280	SPS-I 30/12 180	10	1	G2	180	2xRF06 / 1xF04	9	Stratos 50/9 280	6/10	1	50	280	-	9
Top 50/10	6/10	3	280								Stratos 50/12 280	6/10	1	50	280	-	9
Top-E 50/1-6	6/10	1	240	SPS-I 30/12 180	10	1	G2	180	2xRF05 / 1xF03		Stratos 50/6 240	6/10	1	50	240	-	
Top-E 50/1-7	6/10	1	280	SPS-I 30/12 180	10	1	G2	180	2xRF06 / 1xF04		Stratos 50/9 280	6/10	1	50	280	-	
Top-E 50/1-10	6/10	1	280								Stratos 50/12 280	6/10	1	50	280	-	
Top-NL 50	6/10	3/1	240	SPS-I 30/12 180	10	1	G2	180	2xRF05 / 1xF03	9	Stratos 50/8 240	6/10	1	50	240	-	9
Top-S 50/4	6/10	3/1	240	SPS-I 30/12 180	10	1	G2	180	2xRF05 / 1xF03	9	Stratos 50/6 240	6/10	1	50	240	-	9
Top-S 50/7	6/10	3	280	SPS-I 30/12 180	10	1	G2	180	2xRF06 / 1xF04	9	Stratos 50/9 280	6/10	1	50	280	-	9
Top-S 50/10	6/10	3	280								Stratos 50/12 280	6/10	1	50	280	-	9
Top-S 50/15	6/10	3	340								Stratos 50/16 340	6/10	1	50	340	-	9
Z 309	6	3	355								Stratos 50/10 240	6/10	1	50	240	1x F04	9
Z 314	6	3	355								Stratos 50/6 240	6/10	1	50	240	1x F04	9
DN 65																	
A 214	6	3/1	250								Stratos 65/9 280	6/10	1	65	280	RA	9
EBNL 3-1	6	3/1	330								Stratos 65/9 280	6/10	1	65	280	1xF10 / 1xF11	9
EBNL 3-2	6	3/1	330								Stratos 65/9 280	6/10	1	65	280	1xF10 / 1xF11	9
EBNL 3-3	6	3/1	330								Stratos 65/9 280	6/10	1	65	280	1xF10 / 1xF11	9
EBNU 2	6	3/1	280								Stratos 65/9 280	6/10	1	65	280	-	9
NL 3/130	6	3	330								Stratos 65/9 280	6/10	1	65	280	1xF10 / 1xF11	9
NL 3/145	6	3	330								Stratos 65/9 280	6/10	1	65	280	1xF10 / 1xF11	9
NL 3/160	6	3	330								Stratos 65/9 280	6/10	1	65	280	1xF10 / 1xF11	9
NL 3-1	6	3	340								Stratos 65/9 280	6/10	1	65	280	2x F11	9
NL 3-2	6	3	340								Stratos 65/9 280	6/10	1	65	280	2x F11	9
NL 3-3	6	3	340								Stratos 65/9 280	6/10	1	65	280	2x F11	9
NL 3-8	6	3	280								Stratos 65/9 280	6/10	1	65	280	-	9
NL 3-30	6	3	340								Stratos 65/12 340	6/10	1	65	340	-	9
NL 3-50	6	3	340								Stratos 65/9 280	6/10	1	65	280	2x F11	9
NL 3-75	6	3	340								Stratos 65/9 280	6/10	1	65	280	2x F11	9
NLA 3/175	6	3	370								Stratos 65/9 280	6/10	1	65	280	1xF28 / 1xF29	9
NLA 3/185	6	3	370								Stratos 65/9 280	6/10	1	65	280	1xF28 / 1xF29	9
NLA 3-1	6	3	340								Stratos 65/9 280	6/10	1	65	280	2x F11	9
NLA 3-2	6	3	340								Stratos 65/9 280	6/10	1	65	280	2x F11	9
NLA 3-3	6	3	340								Stratos 65/9 280	6/10	1	65	280	2x F11	9

EMB (Wilo Switzerland)				Hoval													
Type	PN	M	L	Type	PN	M	G/DN	L	AGS	Rem.	Type	PN	M	G/DN	L	AGS	Rem.
NLAD 3/175	10	3	370								Stratos 65/9 280	6/10	1	65	280	1xF28 / 1xF29	9
NLAD 3/185	10	3	370								Stratos 65/9 280	6/10	1	65	280	1xF28 / 1xF29	9
NLAD 3-1	10	3	340								Stratos 65/9 280	6/10	1	65	280	2x F11	9
NLAD 3-2	10	3	340								Stratos 65/9 280	6/10	1	65	280	2x F11	9
NLAD 3-3	10	3	340								Stratos 65/9 280	6/10	1	65	280	2x F11	9
NLD 3/130	10	3	370								Stratos 65/9 280	6/10	1	65	280	1xF28 / 1xF29	9
NLD 3/145	10	3	370								Stratos 65/9 280	6/10	1	65	280	1xF28 / 1xF29	9
NLD 3/160	10	3	370								Stratos 65/9 280	6/10	1	65	280	1xF28 / 1xF29	9
NLD 3-1	10	3	340								Stratos 65/9 280	6/10	1	65	280	2x F11	9
NLD 3-2	10	3	340								Stratos 65/9 280	6/10	1	65	280	2x F11	9
NLD 3-3	10	3	340								Stratos 65/9 280	6/10	1	65	280	2x F11	9
NLD 3-8	10	3	280								Stratos 65/9 280	6/10	1	65	280	-	9
NLD 3-30	10	3	340								Stratos 65/9 280	6/10	1	65	280	2x F11	9
NLD 3-50	10	3	340								Stratos 65/9 280	6/10	1	65	280	2x F11	9
NLD 3-75	10	3	340								Stratos 65/9 280	6/10	1	65	280	2x F11	9
NLD 3-160	16	3	475								Stratos 65/16 340	6/10	1	65	340	1x F41	9
NS 3-110	6	3	340								Stratos 65/9 280	6/10	1	65	280	2x F11	9
NS 3-160	6	3	340								Stratos 65/9 280	6/10	1	65	280	2x F11	9
NS 3-85	6	3	280								Stratos 65/9 280	6/10	1	65	280	-	9
NSD 3-110	10	3	340								Stratos 65/9 280	6/10	1	65	280	2x F11	9
NSD 3-160	10	3	340								Stratos 65/9 280	6/10	1	65	280	2x F11	9
NSD 3-85	10	3	280								Stratos 65/9 280	6/10	1	65	280	-	9
NZ 3/113...134	6	3	330								Stratos 65/9 280	6/10	1	65	280	1xF10 / 1xF11	9
NZ 3/138	6	3	330								Stratos 65/9 280	6/10	1	65	280	1xF10 / 1xF11	9
NZ 3/99...106	6	3	330								Stratos 65/9 280	6/10	1	65	280	1xF10 / 1xF11	9
NZ 4A 125...135	6	3	410								Stratos 65/9 280	6/10	1	65	280	RA	9
NZ 4A 145...175	6	3	410								Stratos 65/9 280	6/10	1	65	280	RA	9
Simplex 65/0.5-9	6/10	1	280								Stratos 65/9 280	6/10	1	65	280	-	
Simplex 65/0.5-12	6/10	1	340								Stratos 65/12 340	6/10	1	65	340	-	
Simplex 65/0.5-16	6/10	1	340								Stratos 65/16 340	6/10	1	65	340	-	
Stratos 65/1-9	6/10	1	280								Stratos 65/9 280	6/10	1	65	280	-	14
Stratos 65/1-12	6/10	1	340								Stratos 65/12 340	6/10	1	65	340	-	14
Stratos 65/1-16	6/10	1	340								Stratos 65/16 340	6/10	1	65	340	-	14
Top-E 65/1-10	6/10	1	340								Stratos 65/12 340	6/10	1	65	340	-	
Top-NL 65	6/10	3/1	280								Stratos 65/9 280	6/10	1	65	280	-	9
Top-S 65/7	6/10	3	280								Stratos 65/9 280	6/10	1	65	280	-	9
Top-S 65/10	6/10	3	340								Stratos 65/16 340	6/10	1	65	340	-	9
Top-S 65/13	6/10	3	340								Stratos 65/16 340	6/10	1	65	340	-	9
Top-S 65/15	6/10	3	340								Stratos 65/16 340	6/10	1	65	340	-	9
Z 414	6	3	425								Stratos 65/9 280	6/10	1	65	280	1xF09 / 1xF41	9
DN 80																	
A 314	6	3/1	375	Stratos 80/12 360	6	1	PN6	360	1x E07	9							
A 414	6	3/1	375	Stratos 80/12 360	6	1	PN6	360	1x E07	9							
E 80-25/75	6	3	500	Stratos 80/12 360	6	1	PN6	360	1x F42	9							
EBNU 3	6	3/1	330	Stratos 80/12 360	6	1	PN6	360	RA	9							
NL 4/150	6	3	410	Stratos 80/12 360	6	1	PN6	360	1x E06	9							
NL 4/170	6	3	410	Stratos 80/12 360	6	1	PN6	360	1x E06	9							
NL 4/190	6	3	410	Stratos 80/12 360	6	1	PN6	360	1x E06	9							
NL 4-1	6	3	360	Stratos 80/12 360	6	1	PN6	360	-	9							
NL 4-13	6	3	330	Stratos 80/12 360	6	1	PN6	360	RA	9							
NL 4-2	6	3	360	Stratos 80/12 360	6	1	PN6	360	-	9							
NL 4-55	6	3	360	Stratos 80/12 360	6	1	PN6	360	-	9							
NL 4-85	6	3	360	Stratos 80/12 360	6	1	PN6	360	-	9							
NLA 4/205	6	3	410	Stratos 80/12 360	6	1	PN6	360	1x E06	9							
NLA 4-1	6	3	500	Stratos 80/12 360	6	1	PN6	360	1x F42	9							
NLA 4-2	6	3	500	Stratos 80/12 360	6	1	PN6	360	1x F42	9							
NLA 4-3	6	3	500	Stratos 80/12 360	6	1	PN6	360	1x F42	9							
NLAD 4/205	10	3	410								Stratos 80/12 360	10	1	PN10	360	1x E06	9
NLAD 4-1	10	3	500								Stratos 80/12 360	10	1	PN10	360	1x F42	9
NLAD 4-2	10	3	500								Stratos 80/12 360	10	1	PN10	360	1x F42	9
NLAD 4-3	10	3	500								Stratos 80/12 360	10	1	PN10	360	1x F42	9
NLD 4/150	10	3	410								Stratos 80/12 360	10	1	PN10	360	1x E06	9
NLD 4/170	10	3	410								Stratos 80/12 360	10	1	PN10	360	1x E06	9
NLD 4/190	10	3	410								Stratos 80/12 360	10	1	PN10	360	1x E06	9
NLD 4-1	10	3	360								Stratos 80/12 360	10	1	PN10	360	-	9
NLD 4-2	10	3	360								Stratos 80/12 360	10	1	PN10	360	-	9
NLD 4-55	10	3	360								Stratos 80/12 360	10	1	PN10	360	-	9
NLD 4-85	10	3	360								Stratos 80/12 360	10	1	PN10	360	-	9
NLD 4-150	10	3	500								Stratos 80/12 360	10	1	PN10	360	1x F42	9
NS 4-110	6	3	360	Stratos 80/12 360	6	1	PN6	360	-	9							
NSD 4-110	10	3	360								Stratos 80/12 360	10	1	PN10	360	-	9
NU 3/102...125	6	3	330	Stratos 80/12 360	6	1	PN6	360	RA	9							
NU 3-1	6	3	360	Stratos 80/12 360	6	1	PN6	360	-	9							
NU 3-2	6	3	360	Stratos 80/12 360	6	1	PN6	360	-	9							
NU 3-3	6	3	360	Stratos 80/12 360	6	1	PN6	360	-	9							
NZ 4 spez./163...177	6	3	410	Stratos 80/12 360	6	1	PN6	360	1x E06	9							
NZ 4/125...145	6	3	410	Stratos 80/12 360	6	1	PN6	360	1x E06	9							
NZ 4/155...177	6	3	410	Stratos 80/12 360	6	1	PN6	360	1x E06	9							
Simplex 80/0.5-6	6	1	280	Stratos 80/12 360	6	1	PN6	360	RA								

EMB (Wilo Switzerland)				Hoval													
Type	PN	M	L	Type	PN	M	G/DN	L	AGS	Rem.	Type	PN	M	G/DN	L	AGS	Rem.
Simplex 80/0.5-6	10	1	280								Stratos 80/12 360	10	1	PN10	360	RA	
Simplex 80/0.5-12	6	1	340	Stratos 80/12 360	6	1	PN6	360	RA								
Simplex 80/0.5-12	10	1	340								Stratos 80/12 360	10	1	PN10	360	RA	
Stratos 80/1-12	6	1	360	Stratos 80/12 360	6	1	PN6	360	-	14							
Stratos 80/1-12	10	1	360								Stratos 80/12 360	10	1	PN10	360	-	14
Top-E 80/1-10	6	1	360	Stratos 80/12 360	6	1	PN6	360	-								
Top-NL 80	6	3/1	330	Stratos 80/12 360	6	1	PN6	360	RA	9							
Top-S 80/7	6	3	360	Stratos 80/12 360	6	1	PN6	360	-	9							
Top-S 80/10	6	3	360	Stratos 80/12 360	6	1	PN6	360	-	9							
DN 100																	
EBNU 4	6	3/1	380	Stratos 100/12 360	6	1	PN6	360	RA	9							
NA 4/131…140	6	3/1	500	Stratos 100/12 360	6	1	PN6	360	RA	9							
NL 5/180	6	3	500	Stratos 100/12 360	6	1	PN6	360	RA	9							
NL 5/205	6	3	500	Stratos 100/12 360	6	1	PN6	360	RA	9							
NL 5/230	6	3	500								VeroLine-IP-E 80/105-3/2	10	3	80	360	RA	9
NL 5-1	6	3	500								VeroLine-IP-E 80/115-2,2/2	10	3	80	360	RA	9
NL 5-2	6	3	500								VeroLine-IP-E 80/115-2,2/2	10	3	80	360	RA	9
NL 5-20	6	3	380	Stratos 100/12 360	6	1	PN6	360	RA	9							
NL 5-3	6	3	500	Stratos 100/12 360	6	1	PN6	360	RA	9							
NLD 5-1	10	3	500								VeroLine-IP-E 80/115-2,2/2	10	3	80	360	RA	9
NLD 5-2	10	3	500								VeroLine-IP-E 80/115-2,2/2	10	3	80	360	RA	9
NLD 5-20	10	3/1	380								Stratos 100/12 360	10	1	PN10	360	RA	9
NLD 5-3	10	3	500								Stratos 100/12 360	10	1	PN10	360	RA	9
NLD 5-90	10	3	395								Stratos 100/12 360	10	1	PN10	360	1x F34	9
NLD 5-110	10	3	500								VeroLine-IP-E 80/115-2,2/2	10	3	80	360	RA	9
NS 5-130	6	3	395	Stratos 100/12 360	6	1	PN6	360	RA	9							
NSD 5-130	10	3	395								Stratos 100/12 360	10	1	PN10	360	1x F34	9
NU 4/126..146	6	3	410	Stratos 100/12 360	6	1	PN6	360	RA	9							
NU 4-1	6	3	395	Stratos 100/12 360	6	1	PN6	360	1x F34	9							
NU 4-2	6	3	395	Stratos 100/12 360	6	1	PN6	360	1x F34	9							
NU 4-3	6	3	395	Stratos 100/12 360	6	1	PN6	360	1x F34	9							
Simplex 100/0.5-12	6	1	360	Stratos 100/12 360	6	1	PN6	360	-								
Simplex 100/0.5-12	10	1	360								Stratos 100/12 360	10	1	PN10	360	-	
Stratos 100/1-12	6	1	360	Stratos 100/12 360	6	1	PN6	360	-	14							
Stratos 100/1-12	10	1	360								Stratos 100/12 360	10	1	PN10	360	-	14
Top-NL 100	6	3/1	380	Stratos 100/12 360	6	1	PN6	360	RA	9							
DN 125																	
Top-NL 125	6	3	450	Stratos 80/12 360	6	1	PN6	360	RA	9	Stratos 80/12 360	10	1	PN10	360	RA	9

EMB (Wilo Switzerland)				Hoval Highly efficient							Hoval Premium highly efficient						
Type	PN	M	L	Type	PN	M	G/DN	L	AGS	Rem.	Type	PN	M	G/DN	L	AGS	Rem.
Circulating pumps domestic hot water																	
Rp ½																	
Z 15	10	1	84	SPS-Z 15/7 130 SMO	10	1	G1	130	RA		Star-Z Nova 15	10	1	Rp½	84	-	
G 1 (Rp ½)																	
NSW 20-6	6	3/1	140	SPS-Z 15/7 130 SMO	10	1	G1	130	RA	9							
Z 15 TT	10	1	138								Motor Star-Z 15 TT	-	1	-	-	-	
Z 20/1	10	1	140	SPS-Z 15/7 130 SMO	10	1	G1	130	RA								
G 1¼ (Rp ¾)																	
Top-Z 20/4	10	1	150	SPS-Z 20/7 150 SMO	10	1	G1¼	150	-								
G 1½ (Rp 1)																	
Eco-Star-Z 25/1-5	10	1	180	SPS-Z 25/7 180 SMO	10	1	G1½	180	-		Stratos Pico-Z 25/6 180	10	1	G1½	180	-	
NLVWE 0/90	10	3/1	190	SPS-Z 25/7 180 SMO	10	1	G1½	180	RA	9							
NLW 0/S	10	3/1	180	SPS-Z 25/7 180 SMO	10	1	G1½	180	-	9	Stratos Pico-Z 25/6 180	10	1	G1½	180	-	9
NSW 25-30	10	3/1	180	SPS-Z 25/7 180 SMO	10	1	G1½	180	-	9	Stratos Pico-Z 25/6 180	10	1	G1½	180	-	9
Stratos-Z 25/1-8	6	1	180	Top-Z 30/10 180	10	1	G2	180	RA		Stratos-Z 30/8 180	10	1	G2	180	RA	14
Top-Z 25/6	10	1	180	SPS-Z 25/7 180 SMO	10	1	G1½	180	-		Stratos-Z 30/8 180	10	1	G2	180	RA	
Top-Z 25/10	10	1	180	Top-Z 30/10 180	10	1	G2	180	RA		Stratos-Z 30/12 180	10	1	G2	180	RA	
Z 25/2	10	1	180	SPS-Z 25/7 180 SMO	10	1	G1½	180	-								
Z 25/6	10	1	180	SPS-Z 25/7 180 SMO	10	1	G1½	180	-		Stratos Pico-Z 25/6 180	10	1	G1½	180	-	
G 2 (Rp 1¼)																	
NLVW 0/90	10	3/1	190	SPS-Z 25/7 180 SMO	10	1	G1½	180	2x R05	9							
NLW 0	10	3/1	220	SPS-Z 25/7 180 SMO	10	1	G1½	180	2x R07	9							
NLW 0/90	10	3/1	190	SPS-Z 25/7 180 SMO	10	1	G1½	180	2x R05	9							
NSW 30-20	10	3/1	180	SPS-Z 25/7 180 SMO	10	1	G1½	180	RA	9							
NSW 30-40	10	3/1	180	SPS-Z 25/7 180 SMO	10	1	G1½	180	RA	9							
NZW 0/55...75	10	3/1	190	SPS-Z 25/7 180 SMO	10	1	G1½	180	2x R05	9							
Stratos-Z 30/1-8	10	1	180	Top-Z 30/10 180	10	1	G2	180	-		Stratos-Z 30/8 180	10	1	G2	180	-	14
Stratos-Z 30/1-12	10	1	180								Stratos-Z 30/12 180	10	1	G2	180	-	14
Top-Z 30/7	10	1	180	Top-Z 30/10 180	10	1	G2	180	-		Stratos-Z 30/8 180	10	1	G2	180	-	
Top-Z 30/10	10	1	180	Top-Z 30/10 180	10	1	G2	180	-		Stratos-Z 30/12 180	10	1	G2	180	-	
DN 40																	
NLVW 1	6	3/1	250	Top-Z 40/7 250	10	1	40	250	-	9							
NLVW 1/110	6	3/1	250	Top-Z 40/7 250	10	1	40	250	-	9							
NLW 1	6	3/1	250	Top-Z 40/7 250	10	1	40	250	-	9							
NSW 1-50	6	3/1	250	Top-Z 40/7 250	10	1	40	250	-	9							
NSWD 1-50	10	3	250	Top-Z 40/7 250	10	1	40	250	-	9							
Stratos-Z 40/1-8	6/10	1	220								Stratos-Z 40/8 220	6/10	1	40	220	-	14
Stratos-Z 40/1-12	6/10	1	250								Stratos-Z 40/12 250	6/10	1	40	250	-	14
Top-Z 40/7	6/10	1	250	Top-Z 40/7 250	10	1	40	250	-		Stratos-Z 40/8 220	6/10	1	40	220	1x F01-MS	
DN 50																	
NLW 2	6	3/1	280	Top-Z 50/7 280	10	3	50	280	-	9							
NLWD 2	10	3	280	Top-Z 50/7 280	10	3	50	280	-	9							
NSW 2-75	6	3	280	Top-Z 50/7 280	10	3	50	280	-	9							
NSWD 2-75	10	3	280	Top-Z 50/7 280	10	3	50	280	-	9							
Stratos-Z 50/1-9	6/10	1	280														
Top-Z 50/7	6/10	3	280	Top-Z 50/7 280	10	3	50	280	-	9							
DN 65																	
NLW 3	6	3	340	Top-Z 65/10 340	10	3	65	340	-	9							
NLWD 3	10	3	340	Top-Z 65/10 340	10	3	65	340	-	9							
NSW 3-80	6	3	340	Top-Z 65/10 340	10	3	65	340	-	9							
NSWD 3-80	10	3	340	Top-Z 65/10 340	10	3	65	340	-	9							
Stratos-Z 65/1-12	6/10	1	340														
Top-Z 65/10	6/10	3	340	Top-Z 65/10 340	10	3	65	340	-	9							
DN 80																	
NSW 4-95	6	3	360	Top-Z 65/10 340	10	3	65	340	RA	9							
NSWD 4-95	10	3	360	Top-Z 65/10 340	10	3	65	340	RA	9							

Grundfos				Hoval													
Type	PN	M	L	Type	PN	M	G/DN	L	AGS	Rem.	Type	PN	M	G/DN	L	AGS	Rem.
Heating circulating pumps																	
G 1 (Rp ½)																	
Alpha 1 15-40 130	10	1	130	HSP 15/4 130 SMO	6	1	G1	130	-		Stratos Pico 15/4 130	6	1	G1	130	-	
Alpha 1 15-60 130	10	1	130	HSP 15/6 130 SMO	6	1	G1	130	-		Stratos Pico 15/6 130	6	1	G1	130	-	
Alpha 15-40 130	10	1	130	HSP 15/4 130 SMO	6	1	G1	130	-		Stratos Pico 15/4 130	6	1	G1	130	-	
Alpha 15-60 130	10	1	130	HSP 15/6 130 SMO	6	1	G1	130	-		Stratos Pico 15/6 130	6	1	G1	130	-	
Alpha 2L 15-40 130	10	1	130	HSP 15/4 130 SMO	6	1	G1	130	-		Stratos Pico 15/4 130	10	1	G1	130	-	
Alpha 2L 15-60 130	10	1	130	HSP 15/6 130 SMO	6	1	G1	130	-		Stratos Pico 15/6 130	10	1	G1	130	-	
Alpha Pro 15-40 130	10	1	130	HSP 15/4 130 SMO	6	1	G1	130	-		Stratos Pico 15/4 130	6	1	G1	130	-	
Alpha Pro 15-60 130	10	1	130	HSP 15/6 130 SMO	6	1	G1	130	-		Stratos Pico 15/6 130	6	1	G1	130	-	
Alpha+ 15-40 130	10	1	130	HSP 15/4 130 SMO	6	1	G1	130	-		Stratos Pico 15/4 130	6	1	G1	130	-	
Alpha+ 15-60 130	10	1	130	HSP 15/6 130 SMO	6	1	G1	130	-		Stratos Pico 15/6 130	6	1	G1	130	-	
Alpha2 15-40 130	10	1	130	HSP 15/4 130 SMO	6	1	G1	130	-		Stratos Pico 15/4 130	10	1	G1	130	-	
Alpha2 15-60 130	10	1	130	HSP 15/6 130 SMO	6	1	G1	130	-		Stratos Pico 15/6 130	10	1	G1	130	-	
UPE 15-40-130	10	1	130	HSP 15/4 130 SMO	6	1	G1	130	-		Stratos Pico 15/4 130	6	1	G1	130	-	
UPE 15-60-130	10	1	130	HSP 15/6 130 SMO	6	1	G1	130	-		Stratos Pico 15/6 130	6	1	G1	130	-	
UPS 15-20-130	10	1	130	HSP 15/4 130 SMO	6	1	G1	130	-		Stratos Pico 15/4 130	6	1	G1	130	-	
UPS 15-30-130	10	1	130	HSP 15/4 130 SMO	6	1	G1	130	-		Stratos Pico 15/4 130	6	1	G1	130	-	
UPS 15-40-130	10	1	130	HSP 15/4 130 SMO	6	1	G1	130	-		Stratos Pico 15/4 130	6	1	G1	130	-	
UPS 15-45-130	10	1	130	HSP 15/4 130 SMO	6	1	G1	130	-		Stratos Pico 15/4 130	6	1	G1	130	-	
UPS 15-45x16	10	1	130	HSP 15/4 130 SMO	6	1	G1	130	-		Stratos Pico 15/4 130	6	1	G1	130	-	
UPS 15-50-130	10	1	130	HSP 15/6 130 SMO	6	1	G1	130	-		Stratos Pico 15/6 130	6	1	G1	130	-	
UPS 15-60-130	10	1	130	HSP 15/6 130 SMO	6	1	G1	130	-		Stratos Pico 15/6 130	6	1	G1	130	-	
G 1¼ (Rp ¾)																	
UM 17-20	10	3/1	130	HSP 15/4 130 SMO	6	1	G1	130	RA	9	Stratos Pico 15/4 130	6	1	G1	130	RA	9
UMS 17-20	10	1	130	HSP 15/4 130 SMO	6	1	G1	130	RA		Stratos Pico 15/4 130	6	1	G1	130	RA	
UP 15-12	10	3/1	180	HSP 25/4 180 SMO	6	1	G1½	180	RA	9	Stratos Pico 25/4 180	6	1	G1½	180	RA	9
UP 15-12x17	10	3/1	130	HSP 15/4 130 SMO	6	1	G1	130	RA	9	Stratos Pico 15/4 130	6	1	G1	130	RA	9
UP 17-35	10	3/1	130	HSP 15/4 130 SMO	6	1	G1	130	RA	9	Stratos Pico 15/4 130	6	1	G1	130	RA	9
UP 17-50	10	3/1	130	HSP 15/6 130 SMO	6	1	G1	130	RA	9	Stratos Pico 15/6 130	6	1	G1	130	RA	9
UPS 15-20 x17	10	1	130	HSP 15/4 130 SMO	6	1	G1	130	RA		Stratos Pico 15/4 130	6	1	G1	130	RA	
UPS 15-35x17	10	1	130	HSP 15/4 130 SMO	6	1	G1	130	RA		Stratos Pico 15/4 130	6	1	G1	130	RA	
UPS 15-45x17	10	1	130	HSP 15/4 130 SMO	6	1	G1	130	RA		Stratos Pico 15/4 130	6	1	G1	130	RA	
UPS 17-35	10	1	130	HSP 15/4 130 SMO	6	1	G1	130	RA		Stratos Pico 15/4 130	6	1	G1	130	RA	
UPS 17-45	10	1	130	HSP 15/6 130 SMO	6	1	G1	130	RA		Stratos Pico 15/6 130	6	1	G1	130	RA	
UPS 17-60	10	1	130	HSP 15/6 130 SMO	6	1	G1	130	RA		Stratos Pico 15/6 130	6	1	G1	130	RA	
UPS 20-20 XD	10	1	180	HSP 25/4 180 SMO	6	1	G1½	180	RA		Stratos Pico 25/4 180	6	1	G1½	180	RA	
UPS 20-40 130	10	1	130	HSP 15/4 130 SMO	6	1	G1	130	RA		Stratos Pico 15/4 130	6	1	G1	130	RA	
UPS 20-40 XD	10	1	180	HSP 25/4 180 SMO	6	1	G1½	180	RA		Stratos Pico 25/4 180	6	1	G1½	180	RA	
UPS 20-50 130	10	1	130	HSP 15/6 130 SMO	6	1	G1	130	RA		Stratos Pico 15/6 130	6	1	G1	130	RA	
UPS 20-60 130	10	1	130	HSP 15/6 130 SMO	6	1	G1	130	RA		Stratos Pico 15/6 130	6	1	G1	130	RA	
G 1½ (Rp 1)																	
Alpha 1 25-40 130	10	1	130	HSP 15/4 130 SMO	6	1	G1	130	1x PAS12		Stratos Pico 25/4 130	6	1	G1½	130	-	
Alpha 1 25-40 180	10	1	180	HSP 25/4 180 SMO	6	1	G1½	180	-		Stratos Pico 25/4 180	6	1	G1½	180	-	
Alpha 1 25-60 130	10	1	130	HSP 15/6 130 SMO	6	1	G1	130	1x PAS12		Stratos Pico 25/6 130	6	1	G1½	130	-	
Alpha 1 25-60 180	10	1	180	HSP 25/6 180 SMO	6	1	G1½	180	-		Stratos Pico 25/6 180	6	1	G1½	180	-	
Alpha 25-40	10	1	180	HSP 25/4 180 SMO	6	1	G1½	180	-		Stratos Pico 25/4 180	6	1	G1½	180	-	
Alpha 25-40 130	10	1	130	HSP 15/4 130 SMO	6	1	G1	130	1x PAS12		Stratos Pico 25/4 130	6	1	G1½	130	-	
Alpha 25-60	10	1	180	HSP 25/6 180 SMO	6	1	G1½	180	-		Stratos Pico 25/6 180	6	1	G1½	180	-	
Alpha 25-60 130	10	1	130	HSP 15/6 130 SMO	6	1	G1	130	1x PAS12		Stratos Pico 25/6 130	6	1	G1½	130	-	
Alpha 2L 25-40 130	10	1	130	HSP 15/4 130 SMO	6	1	G1	130	1x PAS12		Stratos Pico 25/4 130	10	1	G1½	130	-	
Alpha 2L 25-40 180	10	1	180	HSP 25/4 180 SMO	6	1	G1½	180	-		Stratos Pico 25/4 180	10	1	G1½	180	-	
Alpha 2L 25-60 130	10	1	130	HSP 15/6 130 SMO	6	1	G1	130	1x PAS12		Stratos Pico 25/6 130	10	1	G1½	130	-	
Alpha 2L 25-60 180	10	1	180	HSP 25/6 180 SMO	6	1	G1½	180	-		Stratos Pico 25/6 180	10	1	G1½	180	-	
Alpha Pro 25-40	10	1	180	HSP 25/4 180 SMO	6	1	G1½	180	-		Stratos Pico 25/4 180	6	1	G1½	180	-	
Alpha Pro 25-40 130	10	1	130	HSP 15/4 130 SMO	6	1	G1	130	1x PAS12		Stratos Pico 25/4 130	6	1	G1½	130	-	
Alpha Pro 25-40 A	10	1	180	HSP 25/4 180 SMO	6	1	G1½	180	-		Stratos Pico 25/4 180	6	1	G1½	180	-	
Alpha Pro 25-60	10	1	180	HSP 25/6 180 SMO	6	1	G1½	180	-		Stratos Pico 25/6 180	6	1	G1½	180	-	
Alpha Pro 25-60 130	10	1	130	HSP 15/6 130 SMO	6	1	G1	130	1x PAS12		Stratos Pico 25/6 130	6	1	G1½	130	-	
Alpha Pro 25-60 A	10	1	180	HSP 25/6 180 SMO	6	1	G1½	180	-		Stratos Pico 25/6 180	6	1	G1½	180	-	
Alpha+ 25-40	10	1	180	HSP 25/4 180 SMO	6	1	G1½	180	-		Stratos Pico 25/4 180	6	1	G1½	180	-	
Alpha+ 25-40 130	10	1	130	HSP 15/4 130 SMO	6	1	G1	130	1x PAS12		Stratos Pico 25/4 130	6	1	G1½	130	-	
Alpha+ 25-40 A	10	1	180	HSP 25/4 180 SMO	6	1	G1½	180	-		Stratos Pico 25/4 180	6	1	G1½	180	-	
Alpha+ 25-60	10	1	180	HSP 25/6 180 SMO	6	1	G1½	180	-		Stratos Pico 25/6 180	6	1	G1½	180	-	
Alpha+ 25-60 130	10	1	130	HSP 15/6 130 SMO	6	1	G1	130	1x PAS12		Stratos Pico 25/6 130	6	1	G1½	130	-	
Alpha2 25-40	10	1	180	HSP 25/4 180 SMO	6	1	G1½	180	-		Stratos Pico 25/4 180	10	1	G1½	180	-	
Alpha2 25-40 130	10	1	130	HSP 15/4 130 SMO	6	1	G1	130	1x PAS12		Stratos Pico 25/4 130	10	1	G1½	130	-	
Alpha2 25-60	10	1	180	HSP 25/6 180 SMO	6	1	G1½	180	-		Stratos Pico 25/6 180	10	1	G1½	180	-	
Alpha2 25-60 130	10	1	130	HSP 15/6 130 SMO	6	1	G1	130	1x PAS12		Stratos Pico 25/6 130	10	1	G1½	130	-	
CC 1-130	10	1	130	HSP 15/4 130 SMO	6	1	G1	130	1x PAS12		Stratos Pico 25/4 130	6	1	G1½	130	-	
CC 1-160	10	1	160	SPS-A 25/4 130	6	1	G1½	130	1x R01		Stratos Pico 25/4 130	6	1	G1½	130	1x R01	
CC 1-180	10	1	180	HSP 25/4 180 SMO	6	1	G1½	180	-		Stratos Pico 25/4 180	6	1	G1½	180	-	
CC 2-130	10	1	130	HSP 15/4 130 SMO	6	1	G1	130	1x PAS12		Stratos Pico 25/4 130	6	1	G1½	130	-	
CC 2-180	10	1	180	HSP 25/4 180 SMO	6	1	G1½	180	-		Stratos Pico 25/4 180	6	1	G1½	180	-	
CC 3-130	10	1	130	HSP 15/4 130 SMO	6	1	G1	130	1x PAS12		Stratos Pico 25/4 130	6	1	G1½	130	-	
CC 3-160	10	1	160	SPS-A 25/4 130	6	1	G1½	130	1x R01		Stratos Pico 25/4 130	6	1	G1½	130	1x R01	
CC 3-180	10	1	180	HSP 25/4 180 SMO	6	1	G1½	180	-		Stratos Pico 25/4 180	6	1	G1½	180	-	
CC 4-130	10	1	130	HSP 15/4 130 SMO	6	1	G1	130	1x PAS12		Stratos Pico 25/4 130	6	1	G1½	130	-	

Grundfos				Hoval														
Type	PN	M	L	Type	PN	M	G/DN	L	AGS	Rem.	Type	PN	M	G/DN	L	AGS	Rem.
CC 4-180	10	1	180	HSP 25/4 180 SMO	6	1	G1½	180	-		Stratos Pico 25/4 180	6	1	G1½	180	-	
CC 5-130	10	1	130	HSP 15/4 130 SMO	6	1	G1	130	1x PAS12		Stratos Pico 25/4 130	6	1	G1½	130	-	
CC 5-160	10	1	160	SPS-A 25/4 130	6	1	G1½	130	1x R01		Stratos Pico 25/4 130	6	1	G1½	130	1x R01	
CC 5-180	10	1	180	HSP 25/4 180 SMO	6	1	G1½	180	-		Stratos Pico 25/4 180	6	1	G1½	180	-	
CC 6-120	10	1	120	HSP 15/4 130 SMO	6	1	G1	130	RA		Stratos Pico 25/4 130	6	1	G1½	130	RA	
CC 6-180	10	1	180	HSP 25/4 180 SMO	6	1	G1½	180	-		Stratos Pico 25/4 180	6	1	G1½	180	-	
CC 6-180	10	1	180	HSP 25/4 180 SMO	6	1	G1½	180	-		Stratos Pico 25/4 180	6	1	G1½	180	-	
Magna 1 25-40	10	1	180	HSP 25/6 180 SMO	6	1	G1½	180	-		Stratos 25/4 180	10	1	G1½	180	-	14
Magna 1 25-60	10	1	180	HSP 25/6 180 SMO	6	1	G1½	180	-		Stratos 25/6 180	10	1	G1½	180	-	14
Magna 1 25-80	10	1	180	SPS-I 25/8 180	10	1	G1½	180	-	14	Stratos 25/8 180	10	1	G1½	180	-	14
Magna 1 25-100	10	1	180	SPS-I 25/12 180	10	1	G1½	180	-	14	Stratos 25/10 180	10	1	G1½	180	-	14
Magna 1 25-120	10	1	180	SPS-I 25/12 180	10	1	G1½	180	-	14	Stratos 25/12 180	10	1	G1½	180	-	14
Magna 25-40	10	1	180	HSP 25/6 180 SMO	6	1	G1½	180	-		Stratos 25/4 180	10	1	G1½	180	-	14
Magna 25-60	10	1	180	HSP 25/6 180 SMO	6	1	G1½	180	-		Stratos 25/6 180	10	1	G1½	180	-	14
Magna 25-100	10	1	180	SPS-I 25/12 180	10	1	G1½	180	-	14	Stratos 25/10 180	10	1	G1½	180	-	14
Magna3 25-40	10	1	180	HSP 25/6 180 SMO	6	1	G1½	180	-		Stratos 25/4 180	10	1	G1½	180	-	14
Magna3 25-60	10	1	180	HSP 25/6 180 SMO	6	1	G1½	180	-		Stratos 25/6 180	10	1	G1½	180	-	14
Magna3 25-80	10	1	180	SPS-I 25/8 180	10	1	G1½	180	-	14	Stratos 25/8 180	10	1	G1½	180	-	14
Magna3 25-100	10	1	180	SPS-I 25/12 180	10	1	G1½	180	-	14	Stratos 25/10 180	10	1	G1½	180	-	14
Magna3 25-120	10	1	180	SPS-I 25/12 180	10	1	G1½	180	-	14	Stratos 25/12 180	10	1	G1½	180	-	14
UM 18-20	10	3	130	HSP 15/4 130 SMO	6	1	G1	130	1x PAS12	9	Stratos Pico 25/4 130	6	1	G1½	130	-	9
UM 19-20	10	3/1	160	SPS-A 25/4 130	6	1	G1½	130	1x R01	9	Stratos Pico 25/4 130	6	1	G1½	130	1x R01	9
UM 20-13	10	1	180	HSP 25/4 180 SMO	6	1	G1½	180	-		Stratos Pico 25/4 180	6	1	G1½	180	-	
UM 20-15	10	1	180	HSP 25/4 180 SMO	6	1	G1½	180	-		Stratos Pico 25/4 180	6	1	G1½	180	-	
UM 20-20	10	3/1	180	HSP 25/4 180 SMO	6	1	G1½	180	-	9	Stratos Pico 25/4 180	6	1	G1½	180	-	9
UM 25-20	10	3/1	180	HSP 25/4 180 SMO	6	1	G1½	180	-	9	Stratos Pico 25/4 180	6	1	G1½	180	-	9
UM 25-20 (Th)	10	3	180	HSP 25/4 180 SMO	6	1	G1½	180	-	9	Stratos Pico 25/4 180	6	1	G1½	180	-	9
UM 26-20	10	1	180	HSP 25/4 180 SMO	6	1	G1½	180	-		Stratos Pico 25/4 180	6	1	G1½	180	-	
UMS 18-20	10	1	130	HSP 15/4 130 SMO	6	1	G1	130	1x PAS12		Stratos Pico 25/4 130	6	1	G1½	130	-	
UMS 19-20	10	1	160	SPS-A 25/4 130	6	1	G1½	130	1x R01		Stratos Pico 25/4 130	6	1	G1½	130	1x R01	
UMS 20-20	10	1	180	HSP 25/4 180 SMO	6	1	G1½	180	-		Stratos Pico 25/4 180	6	1	G1½	180	-	
UMS 25-20	10	1	180	HSP 25/4 180 SMO	6	1	G1½	180	-		Stratos Pico 25/4 180	6	1	G1½	180	-	
Universel	10	1	170	SPS-A 25/6 130	6	1	G1½	130	1x R02		Stratos Pico 25/6 130	6	1	G1½	130	1x R02	
UP 18-35	10	3/1	130	HSP 15/4 130 SMO	6	1	G1	130	1x PAS12	9	Stratos Pico 25/4 130	6	1	G1½	130	-	9
UP 18-50	10	3/1	130	HSP 15/6 130 SMO	6	1	G1	130	1x PAS12	9	Stratos Pico 25/6 130	6	1	G1½	130	-	9
UP 18-65	10	1	130	HSP 15/6 130 SMO	6	1	G1	130	1x PAS12		Stratos Pico 25/6 130	6	1	G1½	130	-	
UP 19-35	10	3/1	160	SPS-A 25/4 130	6	1	G1½	130	1x R01	9	Stratos Pico 25/4 130	6	1	G1½	130	1x R01	9
UP 19-50	10	3/1	160	SPS-A 25/4 130	6	1	G1½	130	1x R01	9	Stratos Pico 25/4 130	6	1	G1½	130	1x R01	9
UP 20-20	10	3/1	180	HSP 25/4 180 SMO	6	1	G1½	180	-	9	Stratos Pico 25/4 180	6	1	G1½	180	-	9
UP 20-35	10	3/1	180	HSP 25/4 180 SMO	6	1	G1½	180	-	9	Stratos Pico 25/4 180	6	1	G1½	180	-	9
UP 20-50	10	3/1	180	HSP 25/6 180 SMO	6	1	G1½	180	-	9	Stratos Pico 25/6 180	6	1	G1½	180	-	9
UP 25-25	10	3	180	HSP 25/4 180 SMO	6	1	G1½	180	-	9	Stratos Pico 25/4 180	6	1	G1½	180	-	9
UP 25-30 n	6/10	3/1	150	HSP 25/6 180 SMO	6	1	G1½	180	RA	9	Stratos Pico 25/6 180	6	1	G1½	180	RA	9
UP 25-55	10	3/1	180	SPS-I 25/8 180	10	1	G1½	180	-	9	Stratos 25/6 180	10	1	G1½	180	-	9
UP 25-55 Th	10	3	180	SPS-I 25/8 180	10	1	G1½	180	-	9	Stratos 25/6 180	10	1	G1½	180	-	9
UP 25-80	10	3/1	180	SPS-I 25/8 180	10	1	G1½	180	-	9	Stratos 25/8 180	10	1	G1½	180	-	9
UP 25-80 Th	10	3	180	SPS-I 25/8 180	10	1	G1½	180	-	9	Stratos 25/8 180	10	1	G1½	180	-	9
UP 26	10	1	180	HSP 25/6 180 SMO	6	1	G1½	180	-		Stratos Pico 25/4 180	6	1	G1½	180	-	
UP 26-35	10	1	180	HSP 25/6 180 SMO	6	1	G1½	180	-		Stratos Pico 25/4 180	6	1	G1½	180	-	
UP 26-50	10	1	180	HSP 25/6 180 SMO	6	1	G1½	180	-		Stratos Pico 25/6 180	6	1	G1½	180	-	
UP 26-65	10	3/1	180	HSP 25/6 180 SMO	6	1	G1½	180	-	9	Stratos Pico 25/6 180	6	1	G1½	180	-	9
UP 26-80	10	3	180	SPS-I 25/8 180	10	1	G1½	180	-	9	Stratos 25/8 180	10	1	G1½	180	-	9
UPE 25-25	10	1	180	HSP 25/4 180 SMO	6	1	G1½	180	-		Stratos Pico 25/4 180	6	1	G1½	180	-	
UPE 25-40	10	1	180	HSP 25/4 180 SMO	6	1	G1½	180	-		Stratos Pico 25/4 180	6	1	G1½	180	-	
UPE 25-40 130	10	1	130	HSP 15/4 130 SMO	6	1	G1	130	1x PAS12		Stratos Pico 25/4 130	6	1	G1½	130	-	
UPE 25-40 A	10	1	180	HSP 25/6 180 SMO	6	1	G1½	180	-		Stratos Pico 25/6 180	6	1	G1½	180	-	
UPE 25-45	10	1	180	HSP 25/6 180 SMO	6	1	G1½	180	-		Stratos Pico 25/6 180	6	1	G1½	180	-	
UPE 25-60	10	1	180	HSP 25/6 180 SMO	6	1	G1½	180	-		Stratos Pico 25/6 180	6	1	G1½	180	-	
UPE 25-60 130	10	1	130	HSP 15/6 130 SMO	6	1	G1	130	1x PAS12		Stratos Pico 25/6 130	6	1	G1½	130	-	
UPE 25-60 A	10	1	180	HSP 25/6 180 SMO	6	1	G1½	180	-		Stratos Pico 25/6 180	6	1	G1½	180	-	
UPE 25-80	10	1	180	SPS-I 25/8 180	10	1	G1½	180	-	14	Stratos 25/8 180	10	1	G1½	180	-	14
UPI 15-35x20	10	1	180	HSP 25/4 180 SMO	6	1	G1½	180	-		Stratos Pico 25/4 180	6	1	G1½	180	-	
UPI 15-45x20	10	3/1	180	HSP 25/4 180 SMO	6	1	G1½	180	-	9	Stratos Pico 25/4 180	6	1	G1½	180	-	9
UPM 20-35	10	1	180	HSP 25/4 180 SMO	6	1	G1½	180	-		Stratos Pico 25/4 180	6	1	G1½	180	-	
UPS 15-20x20	10	1	180	HSP 25/4 180 SMO	6	1	G1½	180	-		Stratos Pico 25/4 180	6	1	G1½	180	-	
UPS 15-35x18	10	1	130	HSP 15/4 130 SMO	6	1	G1	130	1x PAS12		Stratos Pico 25/4 130	6	1	G1½	130	-	
UPS 15-35x20	10	1	180	HSP 25/4 180 SMO	6	1	G1½	180	-		Stratos Pico 25/4 180	6	1	G1½	180	-	
UPS 15-40	10	1	130	HSP 15/4 130 SMO	6	1	G1	130	1x PAS12		Stratos Pico 25/4 130	6	1	G1½	130	-	
UPS 15-45x18	10	1	130	HSP 15/6 130 SMO	6	1	G1	130	1x PAS12		Stratos Pico 25/6 130	6	1	G1½	130	-	
UPS 15-45x20	10	1	180	HSP 25/6 180 SMO	6	1	G1½	180	-		Stratos Pico 25/6 180	6	1	G1½	180	-	
UPS 15-50x18	10	1	130	HSP 15/6 130 SMO	6	1	G1	130	1x PAS12		Stratos Pico 25/6 130	6	1	G1½	130	-	
UPS 18-35	10	1	130	HSP 15/4 130 SMO	6	1	G1	130	1x PAS12		Stratos Pico 25/4 130	6	1	G1½	130	-	
UPS 18-38	10	1	130	HSP 15/6 130 SMO	6	1	G1	130	1x PAS12		Stratos Pico 25/6 130	6	1	G1½	130	-	
UPS 18-45	10	1	130	HSP 15/6 130 SMO	6	1	G1	130	1x PAS12		Stratos Pico 25/6 130	6	1	G1½	130	-	
UPS 18-60	10	1	130	HSP 15/6 130 SMO	6	1	G1	130	1x PAS12		Stratos Pico 25/6 130	6	1	G1½	130	-	
UPS 19-35	10	1	160	SPS-A 25/4 130	6	1	G1½	130	1x R01		Stratos Pico 25/4 130	6	1	G1½	130	1x R01	
UPS 19-45	10	1	160	SPS-A 25/6 130	6	1	G1½	130	1x R01		Stratos Pico 25/6 130	6	1	G1½	130	1x R01	
UPS 19-60	10	1	160	SPS-A 25/6 130	6	1	G1½	130	1x R01		Stratos Pico 25/6 130	6	1	G1½	130	1x R01	
UPS 20-35	10	1	180	HSP 25/4 180 SMO	6	1	G1½	180	-		Stratos Pico 25/4 180	6	1	G1½	180	-	
UPS 20-45	10	1	180	HSP 25/6 180 SMO	6	1	G1½	180	-		Stratos Pico 25/6 180	6	1	G1½	180	-	

Grundfos				Hoval													
Type	PN	M	L	Type	PN	M	G/DN	L	AGS	Rem.	Type	PN	M	G/DN	L	AGS	Rem.
UPS 20-60	10	1	180	HSP 25/6 180 SMO	6	1	G1½	180	-		Stratos Pico 25/6 180	6	1	G1½	180	-	
UPS 20-60 K	10	1	180	HSP 25/6 180 SMO	6	1	G1½	180	-		Stratos Pico 25/6 180	6	1	G1½	180	-	
UPS 22-35	10	1	180	HSP 25/6 180 SMO	6	1	G1½	180	-		Stratos Pico 25/6 180	6	1	G1½	180	-	
UPS 22-45	10	1	180	HSP 25/6 180 SMO	6	1	G1½	180	-		Stratos Pico 25/6 180	6	1	G1½	180	-	
UPS 22-60	10	1	180	HSP 25/6 180 SMO	6	1	G1½	180	-		Stratos Pico 25/6 180	6	1	G1½	180	-	
UPS 23-35	10	1	180	HSP 25/6 180 SMO	6	1	G1½	180	-		Stratos Pico 25/6 180	6	1	G1½	180	-	
UPS 23-45	10	1	180	HSP 25/6 180 SMO	6	1	G1½	180	-		Stratos Pico 25/6 180	6	1	G1½	180	-	
UPS 23-60	10	1	180	HSP 25/6 180 SMO	6	1	G1½	180	-		Stratos Pico 25/6 180	6	1	G1½	180	-	
UPS 25/70	10	1	180	SPS-S 25/7.5 180SMO	6	1	G1½	180	-		Yonos Pico 25/8 180	6	1	G1½	180	-	
UPS 25-20	10	1	180	HSP 25/4 180 SMO	6	1	G1½	180	-		Stratos Pico 25/4 180	6	1	G1½	180	-	
UPS 25-20 A/V	10	1	180	HSP 25/6 180 SMO	6	1	G1½	180	-		Stratos Pico 25/6 180	6	1	G1½	180	-	
UPS 25-20x18	10	1	130	HSP 15/4 130 SMO	6	1	G1	130	1x PAS12		Stratos Pico 25/4 130	6	1	G1½	130	-	
UPS 25-25	10	1	180	HSP 25/4 180 SMO	6	1	G1½	180	-		Stratos Pico 25/4 180	6	1	G1½	180	-	
UPS 25-30	10	1	180	HSP 25/4 180 SMO	6	1	G1½	180	-		Stratos Pico 25/4 180	6	1	G1½	180	-	
UPS 25-30 A	10	1	180	HSP 25/6 180 SMO	6	1	G1½	180	-		Stratos Pico 25/6 180	6	1	G1½	180	-	
UPS 25-40	10	3/1	180	HSP 25/4 180 SMO	6	1	G1½	180	-	9	Stratos Pico 25/4 180	6	1	G1½	180	-	9
UPS 25-40 130	10	1	130	HSP 15/4 130 SMO	6	1	G1	130	1x PAS12		Stratos Pico 25/4 130	6	1	G1½	130	-	
UPS 25-40 A/V	10	1	180	HSP 25/6 180 SMO	6	1	G1½	180	-		Stratos Pico 25/6 180	6	1	G1½	180	-	
UPS 25-50	10	3/1	180	HSP 25/6 180 SMO	6	1	G1½	180	-	9	Stratos Pico 25/6 180	6	1	G1½	180	-	9
UPS 25-50 130	10	1	130	HSP 15/6 130 SMO	6	1	G1	130	1x PAS12		Stratos Pico 25/6 130	6	1	G1½	130	-	
UPS 25-50/120	10	1	120	HSP 15/6 130 SMO	6	1	G1	130	RA		Stratos Pico 15/6 180	6	1	G1	130	RA	
UPS 25-50/160	10	1	160	HSP 15/6 130 SMO	6	1	G1	130	RA		Stratos Pico 25/6 130	6	1	G1½	130	1x R01	
UPS 25-55	10	1	180	SPS-I 25/8 180	10	1	G1½	180	-		Stratos 25/8 180	10	1	G1½	180	-	
UPS 25-60	10	3/1	180	HSP 25/6 180 SMO	6	1	G1½	180	-	9	Stratos Pico 25/6 180	6	1	G1½	180	-	9
UPS 25-60 130	10	1	130	HSP 15/6 130 SMO	6	1	G1	130	1x PAS12		Stratos Pico 25/6 130	6	1	G1½	130	-	
UPS 25-60 A/V	10	1	180	HSP 25/6 180 SMO	6	1	G1½	180	-		Stratos Pico 25/6 180	6	1	G1½	180	-	
UPS 25-60 K	10	1	180	HSP 25/6 180 SMO	6	1	G1½	180	-		Stratos Pico 25/6 180	6	1	G1½	180	-	
UPS 25-60 T	10	1	180	HSP 25/6 180 SMO	6	1	G1½	180	-		Stratos Pico 25/6 180	6	1	G1½	180	-	
UPS 25-60/120	10	1	120	HSP 15/6 130 SMO	6	1	G1	130	RA		Stratos Pico 25/6 180	6	1	G1½	180	RA	
UPS 25-80	10	1	180	SPS-S 25/7.5 180SMO	6	1	G1½	180	-		Yonos Pico 25/8 180	6	1	G1½	180	-	
UPS 25-120	10	1	180	SPS-I 25/12 180	10	1	G1½	180	-		Stratos 25/12 180	10	1	G1½	180	-	
UPS 26-80	10	1	180	SPS-S 25/7.5 180SMO	6	1	G1½	180	-		Yonos Pico 25/8 180	6	1	G1½	180	-	
G 2 (Rp 1¼)																	
Alpha 1 32-40 180	10	1	180	HSP 30/4 180 SMO	6	1	G2	180	-		Stratos Pico 30/4 180	6	1	G2	180	-	
Alpha 1 32-60 180	10	1	180	HSP 30/6 180 SMO	6	1	G2	180	-		Stratos Pico 30/6 180	6	1	G2	180	-	
Alpha 2L 32-40 180	10	1	180	HSP 30/4 180 SMO	6	1	G2	180	-		Stratos Pico 30/4 180	6	1	G2	180	-	
Alpha 2L 32-60 180	10	1	180	HSP 30/6 180 SMO	6	1	G2	180	-		Stratos Pico 30/6 180	6	1	G2	180	-	
Alpha 32-40	10	1	180	HSP 30/4 180 SMO	6	1	G2	180	-		Stratos Pico 30/4 180	6	1	G2	180	-	
Alpha 32-60	10	1	180	HSP 30/6 180 SMO	6	1	G2	180	-		Stratos Pico 30/6 180	6	1	G2	180	-	
Alpha Pro 32-40	10	1	180	HSP 30/4 180 SMO	6	1	G2	180	-		Stratos Pico 30/4 180	6	1	G2	180	-	
Alpha Pro 32-60	10	1	180	HSP 30/6 180 SMO	6	1	G2	180	-		Stratos Pico 30/6 180	6	1	G2	180	-	
Alpha+ 32-40	10	1	180	HSP 30/4 180 SMO	6	1	G2	180	-		Stratos Pico 30/4 180	6	1	G2	180	-	
Alpha+ 32-60	10	1	180	HSP 30/6 180 SMO	6	1	G2	180	-		Stratos Pico 30/6 180	6	1	G2	180	-	
Alpha2 32-40	10	1	180	HSP 30/4 180 SMO	6	1	G2	180	-		Stratos Pico 30/4 180	10	1	G2	180	-	
Alpha2 32-60	10	1	180	HSP 30/6 180 SMO	6	1	G2	180	-		Stratos Pico 30/6 180	10	1	G2	180	-	
GD 30	10	3/1	206	HSP 30/6 180 SMO	6	1	G2	180	1x R09	9	Stratos Pico 30/6 180	6	1	G2	180	1x R09	9
Magna 1 32-40	10	1	180	SPS-I 30/8 180	10	1	G2	180	-		Stratos 30/4 180	10	1	G2	180	-	
Magna 1 32-60	10	1	180	SPS-I 30/8 180	10	1	G2	180	-		Stratos 30/6 180	10	1	G2	180	-	
Magna 1 32-80	10	1	180	SPS-I 30/8 180	10	1	G2	180	-		Stratos 30/10 180	10	1	G2	180	-	
Magna 1 32-100	10	1	180	SPS-I 30/12 180	10	1	G2	180	-		Stratos 30/10 180	10	1	G2	180	-	
Magna 32-40	10	1	180	SPS-I 30/8 180	10	1	G2	180	-		Stratos 30/4 180	10	1	G2	180	-	
Magna 32-60	10	1	180	SPS-I 30/8 180	10	1	G2	180	-		Stratos 30/6 180	10	1	G2	180	-	
Magna 32-100	10	1	180	SPS-I 30/12 180	10	1	G2	180	-		Stratos 30/10 180	10	1	G2	180	-	
Magna3 32-40	10	1	180	SPS-I 30/8 180	10	1	G2	180	-	14	Stratos 30/4 180	10	1	G2	180	-	14
Magna3 32-60	10	1	180	SPS-I 30/8 180	10	1	G2	180	-	14	Stratos 30/6 180	10	1	G2	180	-	14
Magna3 32-80	10	1	180	SPS-I 30/8 180	10	1	G2	180	-	14	Stratos 30/10 180	10	1	G2	180	-	14
Magna3 32-100	10	1	180	SPS-I 30/12 180	10	1	G2	180	-	14	Stratos 30/10 180	10	1	G2	180	-	14
UM 32-20 (180)	10	3/1	180	HSP 30/4 180 SMO	6	1	G2	180	-	9	Stratos Pico 30/4 180	6	1	G2	180	-	9
UM 32-20 (200)	10	3/1	200	HSP 30/4 180 SMO	6	1	G2	180	1x R08	9	Stratos Pico 30/4 180	6	1	G2	180	1x R08	9
UM 36-20 R	10	3/1	200	HSP 30/4 180 SMO	6	1	G2	180	1x R08	9	Stratos Pico 30/4 180	6	1	G2	180	1x R08	9
UMS 32-20 (180)	10	3/1	180	HSP 30/4 180 SMO	6	1	G2	180	-	9	Stratos Pico 30/4 180	6	1	G2	180	-	9
UMS 32-20 (200)	10	3/1	200	HSP 30/4 180 SMO	6	1	G2	180	1x R08	9	Stratos Pico 30/4 180	6	1	G2	180	1x R08	9
UMS 36-20	10	3/1	200	HSP 30/6 180 SMO	6	1	G2	180	1x R08	9	Stratos Pico 30/6 180	6	1	G2	180	1x R08	9
UMS 36-20 R	10	1	200	HSP 30/4 180 SMO	6	1	G2	180	1x R08		Stratos Pico 30/4 180	6	1	G2	180	1x R08	
UMS 40-20	10	3/1	180	HSP 30/4 180 SMO	6	1	G2	180	-	9	Stratos Pico 30/4 180	6	1	G2	180	-	9
UP 32-25	10	3	180	HSP 30/4 180 SMO	6	1	G2	180	-	9	Stratos Pico 30/4 180	6	1	G2	180	-	9
UP 32-50	10	1	200	HSP 30/6 180 SMO	6	1	G2	180	1x R08		Stratos Pico 30/6 180	6	1	G2	180	1x R08	
UP 32-50 G	10	3	200	SPS-I 30/8 180	10	1	G2	180	1x R08	9	Stratos 30/6 180	10	1	G2	180	1x R08	9
UP 32-55	10	1	180	HSP 30/6 180 SMO	6	1	G2	180	-		Stratos Pico 30/6 180	6	1	G2	180	-	
UP 32-55 (G)	10	3	180	SPS-I 30/8 180	10	1	G2	180	-	9	Stratos 30/6 180	10	1	G2	180	-	9
UP 32-80	10	3	180	SPS-I 30/12 180	10	1	G2	180	-	9	Stratos 30/12 180	10	1	G2	180	-	9
UP 35	10	3/1	200	HSP 30/4 180 SMO	6	1	G2	180	1x R08	9	Stratos Pico 30/4 180	6	1	G2	180	1x R08	9
UP 40-37	10	3/1	180	HSP 30/6 180 SMO	6	1	G2	180	-	9	Stratos Pico 30/6 180	6	1	G2	180	-	9
UP 40-75	10	3/1	180	SPS-I 30/12 180	10	1	G2	180		9	Stratos 30/12 180	10	1	G2	180	-	9
UP 40-75 R	10	3/1	180	SPS-I 30/12 180	10	1	G2	180		9	Stratos 30/12 180	10	1	G2	180	-	9
UP 40-80	10	3/1	180	SPS-I 30/12 180	10	1	G2	180		9	Stratos 30/12 180	10	1	G2	180	-	9
UP 40-80 R	10	3/1	180	SPS-I 30/12 180	10	1	G2	180		9	Stratos 30/12 180	10	1	G2	180	-	9
UP 42-42	10	3/1	200	SPS-I 30/8 180	10	1	G2	180	1x R08	9	Stratos 30/8 180	10	1	G2	180	1x R08	9
UP 42-42 R	10	3/1	200	SPS-I 30/8 180	10	1	G2	180	1x R08	9	Stratos 30/8 180	10	1	G2	180	1x R08	9

Grundfos				Hoval													
Type	PN	M	L	Type	PN	M	G/DN	L	AGS	Rem.	Type	PN	M	G/DN	L	AGS	Rem.
UP 42-50	10	3/1	200	SPS-I 30/12 180	10	1	G2	180	1x R08	9	Stratos 30/12 180	10	1	G2	180	1x R08	9
UP 42-50 R	10	3/1	200	SPS-I 30/8 180	10	1	G2	180	1x R08	9	Stratos 30/8 180	10	1	G2	180	1x R08	9
UP 45	10	3/1	200	HSP 30/6 180 SMO	6	1	G2	180	1x R08	9	Stratos Pico 30/6 180	6	1	G2	180	1x R08	9
UP 45 R	10	3/1	200	HSP 30/4 180 SMO	6	1	G2	180	1x R08	9	Stratos Pico 30/4 180	6	1	G2	180	1x R08	9
UPE 32-25	10	1	180	HSP 30/4 180 SMO	6	1	G2	180	-		Stratos Pico 30/4 180	6	1	G2	180	-	
UPE 32-40	10	1	180	HSP 30/4 180 SMO	6	1	G2	180	-		Stratos Pico 30/4 180	6	1	G2	180	-	
UPE 32-45	10	1	180	HSP 30/6 180 SMO	6	1	G2	180	-		Stratos Pico 30/6 180	6	1	G2	180	-	
UPE 32-60	10	1	180	HSP 30/6 180 SMO	6	1	G2	180	-		Stratos Pico 30/6 180	6	1	G2	180	-	
UPE 32-80	10	1	180	SPS-I 30/8 180	10	1	G2	180	-		Stratos 30/8 180	10	1	G2	180	-	
UPS 15-20x40	10	1	180	HSP 30/4 180 SMO	6	1	G2	180	-		Stratos Pico 30/4 180	6	1	G2	180	-	
UPS 15-35x40	10	1	180	HSP 30/4 180 SMO	6	1	G2	180	-		Stratos Pico 30/4 180	6	1	G2	180	-	
UPS 15-45x40	10	1	180	HSP 30/6 180 SMO	6	1	G2	180	-		Stratos Pico 30/6 180	6	1	G2	180	-	
UPS 32-20	10	1	180	HSP 30/4 180 SMO	6	1	G2	180	-		Stratos Pico 30/4 180	6	1	G2	180	-	
UPS 32-25	10	1	180	HSP 30/4 180 SMO	6	1	G2	180	-		Stratos Pico 30/4 180	6	1	G2	180	-	
UPS 32-30	10	1	180	HSP 30/4 180 SMO	6	1	G2	180	-		Stratos Pico 30/4 180	6	1	G2	180	-	
UPS 32-40	10	1	180	HSP 30/4 180 SMO	6	1	G2	180	-		Stratos Pico 30/4 180	6	1	G2	180	-	
UPS 32-50	10	3/1	180	HSP 30/6 180 SMO	6	1	G2	180	-	9	Stratos Pico 30/6 180	6	1	G2	180	-	9
UPS 32-50 G	10	1	200	SPS-I 30/8 180	10	1	G2	180	1x R08		Stratos 30/8 180	10	1	G2	180	1x R08	
UPS 32-55	10	3/1	180	SPS-I 30/8 180	10	1	G2	180	-	9	Stratos 30/8 180	10	1	G2	180	-	9
UPS 32-55 (G)	10	1	180	SPS-I 30/8 180	10	1	G2	180	-		Stratos 30/8 180	10	1	G2	180	-	
UPS 32-60	10	1	180	HSP 30/6 180 SMO	6	1	G2	180	-		Stratos Pico 30/6 180	6	1	G2	180	-	
UPS 32-70	10	1	180	SPS-S 30/7.5 180SMO	6	1	G2	180	-		Yonos Pico 30/8 180	6	1	G2	180	-	
UPS 32-80	10	1	180	SPS-I 30/8 180	10	1	G2	180	-		Stratos 30/8 180	10	1	G2	180	-	
UPS 40-35	10	1	180	HSP 30/6 180 SMO	6	1	G2	180	-		Stratos Pico 30/6 180	6	1	G2	180	-	
UPS 40-45	10	1	180	HSP 30/6 180 SMO	6	1	G2	180	-		Stratos Pico 30/6 180	6	1	G2	180	-	
UPS 40-62	10	3/1	180	HSP 30/6 180 SMO	6	1	G2	180	-	9	Stratos Pico 30/6 180	6	1	G2	180	-	9
UPS 40-80	10	3/1	180	SPS-I 30/12 180	10	1	G2	180	-	9	Stratos 30/12 180	10	1	G2	180	-	9
UPS 40-80 R	10	1	180	SPS-I 30/12 180	10	1	G2	180	-		Stratos 30/12 180	10	1	G2	180	-	
UPS 42-50	10	3/1	200	SPS-I 30/12 180	10	1	G2	180	1x R08	9	Stratos 30/12 180	10	1	G2	180	1x R08	9
UPS 42-50 R	10	1	200	SPS-I 30/8 180	10	1	G2	180	1x R08		Stratos 30/8 180	10	1	G2	180	1x R08	
Oval flange																	
UP 31-50	10	1	120	SPS-I 30/8 180	10	1	G2	180	RA		Stratos 30/6 180	10	1	G2	180	RA	
UP 31-65	10	3/1	120	SPS-I 30/8 180	10	1	G2	180	RA	9	Stratos 30/6 180	10	1	G2	180	RA	9
DN 25																	
UM 21-50	10	1	120	HSP 25/6 180 SMO	6	1	G1½	180	RA		Stratos Pico 25/6 180	6	1	G1½	180	RA	
DN 25 Oval flange																	
CC 5-120	10	1	120	HSP 15/6 130 SMO	6	1	G1	130	RA		Stratos Pico 25/6 130	6	1	G1½	130	RA	
UM 21-15	10	1	120	HSP 15/4 130 SMO	6	1	G1	130	RA		Stratos Pico 25/4 130	6	1	G1½	130	RA	
UM 21-20 (V)	10	3/1	120	HSP 15/4 130 SMO	6	1	G1	130	RA	9	Stratos Pico 25/4 130	6	1	G1½	130	RA	9
UMS 21-20	10	1	120	HSP 15/4 130 SMO	6	1	G1	130	RA		Stratos Pico 25/4 130	6	1	G1½	130	RA	
UP 21-20	10	1	120	HSP 15/4 130 SMO	6	1	G1	130	RA		Stratos Pico 25/4 130	6	1	G1½	130	RA	
UP 21-20 (V)	10	1	120	HSP 15/4 130 SMO	6	1	G1	130	RA		Stratos Pico 25/4 130	6	1	G1½	130	RA	
UP 21-35 (V)	10	3/1	120	HSP 15/4 130 SMO	6	1	G1	130	RA	9	Stratos Pico 25/4 130	6	1	G1½	130	RA	9
UP 21-50	10	1	120	HSP 15/6 130 SMO	6	1	G1	130	RA		Stratos Pico 25/6 130	6	1	G1½	130	RA	
UP 21-65	10	1	120	HSP 15/6 130 SMO	6	1	G1	130	RA		Stratos Pico 25/6 130	6	1	G1½	130	RA	
UPS 15-35x21	10	1	120	HSP 15/4 130 SMO	6	1	G1	130	RA		Stratos Pico 25/4 130	6	1	G1½	130	RA	
UPS 15-45x21	10	1	120	HSP 15/6 130 SMO	6	1	G1	130	RA		Stratos Pico 25/6 130	6	1	G1½	130	RA	
UPS 21-35	10	1	120	HSP 15/4 130 SMO	6	1	G1	130	RA		Stratos Pico 25/4 130	6	1	G1½	130	RA	
UPS 21-40	10	1	120	HSP 15/4 130 SMO	6	1	G1	130	RA		Stratos Pico 25/4 130	6	1	G1½	130	RA	
UPS 21-45	10	1	120	HSP 15/6 130 SMO	6	1	G1	130	RA		Stratos Pico 25/6 130	6	1	G1½	130	RA	
UPS 21-60 F	10	1	120	HSP 15/6 130 SMO	6	1	G1	130	RA		Stratos Pico 25/6 130	6	1	G1½	130	RA	
DN 32																	
Magna 1 32-40 F	6/10	1	220	SPS-I 30/8 180	10	1	G2	180	2x RF03		Stratos 32/10 220	6/10	1	32	220	-	
Magna 1 32-60 F	6/10	1	220	SPS-I 30/8 180	10	1	G2	180	2x RF03		Stratos 32/10 220	6/10	1	32	220	-	
Magna 1 32-80 F	6/10	1	220	SPS-I 30/8 180	10	1	G2	180	2x RF03		Stratos 32/10 220	6/10	1	32	220	-	
Magna 1 32-100 F	6/10	1	220	SPS-I 30/12 180	10	1	G2	180	2x RF03		Stratos 32/12 220	6/10	1	32	220	-	
Magna 32-100 F	6/10	1	220	SPS-I 30/12 180	10	1	G2	180	2x RF03		Stratos 32/10 220	6/10	1	32	220	-	
Magna 32-120 F	6/10	1	220	SPS-I 30/12 180	10	1	G2	180	2x RF03		Stratos 32/12 220	6/10	1	32	220	-	
Magna UPE 32-120 FN	6/10	1	220	SPS-I 30/12 180	10	1	G2	180	2x RF03		Stratos 32/12 220	6/10	1	32	220	-	
Magna3 32-40 F	6/10	1	220	SPS-I 30/8 180	10	1	G2	180	2x RF03		Stratos 32/10 220	6/10	1	32	220	-	14
Magna3 32-60 F	6/10	1	220	SPS-I 30/8 180	10	1	G2	180	2x RF03		Stratos 32/10 220	6/10	1	32	220	-	14
Magna3 32-80 F	6/10	1	220	SPS-I 30/8 180	10	1	G2	180	2x RF03		Stratos 32/10 220	6/10	1	32	220	-	14
Magna3 32-100 F	6/10	1	220	SPS-I 30/12 180	10	1	G2	180	2x RF03		Stratos 32/12 220	6/10	1	32	220	-	14
Magna3 32-120 F	10	1	220	SPS-I 30/12 180	10	1	G2	180	2x RF03		Stratos 32/12 220	6/10	1	32	220	-	14
UMC 32-30	6/10	3/1	220	SPS-I 30/8 180	10	1	G2	180	2x RF03	9	Stratos 30/6 180	10	1	G2	180	2x RF03	9
UMK 32-30	6/10	3/1	220	SPS-I 30/8 180	10	1	G2	180	2x RF03	9	Stratos 30/6 180	10	1	G2	180	2x RF03	9
UMS 36-20 F	10	3/1	200	HSP 30/6 180 SMO	6	1	G2	180	1xRF01 / 1xRF03	9	Stratos Pico 30/6 180	6	1	G2	180	1xRF01 / 1xRF03	9
UP 32-0	10	3/1	200	HSP 30/4 180 SMO	6	1	G2	180	1xRF01 / 1xRF03	9	Stratos Pico 30/4 180	6	1	G2	180	1xRF01 / 1xRF03	9
UP 32-1	10	3/1	200	HSP 30/4 180 SMO	6	1	G2	180	1xRF01 / 1xRF03	9	Stratos Pico 30/4 180	6	1	G2	180	1xRF01 / 1xRF03	9
UP 32-2	10	3/1	200	HSP 30/4 180 SMO	6	1	G2	180	1xRF01 / 1xRF03	9	Stratos Pico 30/4 180	6	1	G2	180	1xRF01 / 1xRF03	9
UP 32-3	10	3/1	200	HSP 30/4 180 SMO	6	1	G2	180	1xRF01 / 1xRF03	9	Stratos Pico 30/4 180	6	1	G2	180	1xRF01 / 1xRF03	9
UP 35 (DN 32)	10	3/1	200	HSP 30/4 180 SMO	6	1	G2	180	1xRF01 / 1xRF03	9	Stratos Pico 30/4 180	6	1	G2	180	1xRF01 / 1xRF03	9
UP 45 (DN 32)	10	3/1	200	HSP 30/6 180 SMO	6	1	G2	180	1xRF01 / 1xRF03	9	Stratos Pico 30/6 180	6	1	G2	180	1xRF01 / 1xRF03	9
UPC 32-60	6/10	3/1	220	SPS-I 30/8 180	10	1	G2	180	2x RF03	9	Stratos 30/8 180	10	1	G2	180	2x RF03	9
UPC 32-120	6/10	3/1	220	SPS-I 30/12 180	10	1	G2	180	2x RF03	9	Stratos 32/12 220	6/10	1	32	220	-	9
UPE 32-120 (F)	6/10	1	220	SPS-I 30/12 180	10	1	G2	180	2x RF03		Stratos 32/12 220	6/10	1	32	220	-	
UPE 32-120 FB	6/10	1	220								Stratos-Z 30/12 180	10	1	G2	180	2x RF03	

Grundfos				Hoval													
Type	PN	M	L	Type	PN	M	G/DN	L	AGS	Rem.	Type	PN	M	G/DN	L	AGS	Rem.
UPE 32-80 F	6/10	1	220	SPS-I 30/12 180	10	1	G2	180	2x RF03		Stratos 32/12 220	6/10	1	32	220	-	
UPK 32-60	6/10	3/1	220	SPS-I 30/12 180	10	1	G2	180	2x RF03	9	Stratos 32/12 220	6/10	1	32	220	-	9
UPK 32-120	6/10	3/1	220	SPS-I 30/12 180	10	1	G2	180	2x RF03	9	Stratos 32/12 220	6/10	1	32	220	-	9
UPS 32-30 F	6/10	3/1	220	SPS-I 30/8 180	10	1	G2	180	2x RF03	9	Stratos 30/6 180	10	1	G2	180	2x RF03	9
UPS 32-60 F	6/10	3/1	220	SPS-I 30/12 180	10	1	G2	180	2x RF03	9	Stratos 32/10 220	6/10	1	32	220	-	9
UPS 32-80 F	6/10	1	220	SPS-I 30/8 180	10	1	G2	180	2x RF03		Stratos 32/10 220	6/10	1	32	220	-	
UPS 32-120 F	6/10	3/1	220	SPS-I 30/12 180	10	1	G2	180	2x RF03	9	Stratos 32/12 220	6/10	1	32	220	-	9
DN 32 4-edge flange																	
CC 3-120	10	1	120	HSP 15/6 130 SMO	6	1	G1	130	RA		Stratos Pico 25/6 130	6	1	G1½	130	RA	
UM 36-20 F	10	3/1	200	HSP 30/4 180 SMO	6	1	G2	180	RA	9	Stratos Pico 30/4 180	6	1	G2	180	RA	9
UM 40-12 F	10	3/1	200	HSP 30/4 180 SMO	6	1	G2	180	RA	9	Stratos Pico 30/4 180	6	1	G2	180	RA	9
UP 40-37 F	10	3/1	200	HSP 30/6 180 SMO	6	1	G2	180	RA	9	Stratos Pico 30/6 180	6	1	G2	180	RA	9
UP 40-75 F	10	1	200	SPS-I 30/8 180	10	1	G2	180	RA		Stratos 30/8 180	10	1	G2	180	RA	
VP 35	10	3/1	200	HSP 30/6 180 SMO	6	1	G2	180	RA	9	Stratos Pico 30/6 180	6	1	G2	180	RA	9
VP 45	10	3/1	200	HSP 30/6 180 SMO	6	1	G2	180	RA	9	Stratos Pico 30/6 180	6	1	G2	180	RA	9
DN 40																	
GD 40		3	220	SPS-I 30/8 180	10	1	G2	180	2x RF03	9	Stratos 30/6 180	10	1	G2	180	2x RF03	9
Magna 40-60 F	6/10	1	220	SPS-I 30/8 180	10	1	G2	180	1xR08 / 2xRF12		Stratos 40/8 220	6/10	1	40	220	-	
Magna 40-80 F	6/10	1	220	SPS-I 30/8 180	10	1	G2	180	1xR08 / 2xRF12		Stratos 40/8 220	6/10	1	40	220	-	
Magna 40-100 F	6/10	1	220	SPS-I 30/12 180	10	1	G2	180	1xR08 / 2xRF12		Stratos 40/10 220	6/10	1	40	220	-	
Magna 40-120 F	6/10	1	250	SPS-I 30/12 180	10	1	G2	180	2xRF12 / 1xF26		Stratos 40/12 250	6/10	1	40	250	-	
Magna3 40-40 F	6/10	1	220								Stratos 40/4 220	6/10	1	40	220	-	14
Magna3 40-60 F	6/10	1	220								Stratos 40/8 220	6/10	1	40	220	-	14
Magna3 40-80 F	6/10	1	220								Stratos 40/8 220	6/10	1	40	220	-	14
Magna3 40-100 F	6/10	1	220								Stratos 40/10 220	6/10	1	40	220	-	14
Magna3 40-120 F	6/10	1	250								Stratos 40/12 250	6/10	1	40	250	-	14
Magna3 40-150 F	6/10	1	250								Stratos 40/16 250	6/10	1	40	250	-	14
Magna3 40-180 F	6/10	1	250								Stratos 40/16 250	6/10	1	40	250	-	14
UMC 40-30		3/1	250	SPS-I 30/8 180	10	1	G2	180	2xRF12 / 1xF26	9	Stratos 40/8 220	6/10	1	40	220	-	9
UMC 40-60		3/1	250	SPS-I 30/8 180	10	1	G2	180	2xRF12 / 1xF26	9	Stratos 40/8 220	6/10	1	40	220	-	9
UMK 40-30		3/1	250	SPS-I 30/8 180	10	1	G2	180	2xRF12 / 1xF26	9	Stratos 40/8 220	6/10	1	40	220	-	9
UMK 40-60		3/1	250	SPS-I 30/8 180	10	1	G2	180	2xRF12 / 1xF26	9	Stratos 40/8 220	6/10	1	40	220	-	9
UMS 40-30		3/1	250	SPS-I 30/12 180	10	1	G2	180	2xRF12 / 1xF26	9	Stratos 40/8 220	6/10	1	40	220	-	9
UP 40-37		3	200	SPS-I 30/12 180	10	1	G2	180	2xRF12	9	Stratos 30/6 180	10	1	G2	180	2xRF12	9
UP 40-75 F		1	200	SPS-I 30/12 180	10	1	G2	180	2xRF12		Stratos 30/8 180	10	1	G2	180	2xRF12	
UP 42-42 (F)		3	250							9	Stratos 40/8 220	6/10	1	40	220	1x F01	9
UP 42-42 (F)		1	250								Stratos 40/8 220	6/10	1	40	220	1x F01	
UP 42-50 F		3	250							9	Stratos 40/8 220	6/10	1	40	220	1x F01	9
UP 42-70 F		3	250							9	Stratos 40/8 220	6/10	1	40	220	1x F01	9
UP 42-80 F		3	250							9	Stratos 40/8 220	6/10	1	40	220	1x F01	9
UPC 40-60		3/1	250							9	Stratos 40/8 220	6/10	1	40	220	1x F01	9
UPC 40-120		3/1	250							9	Stratos 40/12 250	6/10	1	40	250	-	9
UPE 40-80 F		1	250								Stratos 40/10 220	6/10	1	40	220	1x F01	
UPE 40-120		1	250								Stratos 40/12 250	6/10	1	40	250	-	
UPK 40-60		3/1	250							9	Stratos 40/8 220	6/10	1	40	220	1x F01	9
UPK 40-120		3/1	250							9	Stratos 40/12 250	6/10	1	40	250	-	9
UPK 40-180		3/1	250							9	Stratos 40/16 250	6/10	1	40	250	-	9
UPS 40-30 F		3/1	250							9	Stratos 40/8 220	6/10	1	40	220	1x F01	9
UPS 40-50 F		1	250								Stratos 40/8 220	6/10	1	40	220	1x F01	
UPS 40-60		3/1	250							9	Stratos 40/8 220	6/10	1	40	220	1x F01	9
UPS 40-60/2 F		3/1	250							9	Stratos 40/10 220	6/10	1	40	220	1x F01	9
UPS 40-60/4 F		3/1	250							9	Stratos 40/10 220	6/10	1	40	220	1x F01	9
UPS 40-120		3	250							9	Stratos 40/12 250	6/10	1	40	250	-	9
UPS 40-120 F		3/1	250							9	Stratos 40/12 250	6/10	1	40	250	-	9
UPS 40-180 F		3/1	250							9	Stratos 40/16 250	6/10	1	40	250	-	9
UPS 42-50 F		1	250								Stratos 40/8 220	6/10	1	40	220	1x F01	
UPS 42-80 F		1	250								Stratos 40/10 220	6/10	1	40	220	1x F01	
UPS 48-80 F 250		3	250							9	Stratos 40/10 220	6/10	1	40	220	1x F01	9
DN 40 4-edge flange																	
UP 40-37 R	10	3/1	200	SPS-I 25/8 180	10	1	G1½	180	RA	9	Stratos 25/6 180	10	1	G1½	180	RA	9
DN 50																	
GD 50	6/10	3/1	240								Stratos 50/6 240	6/10	1	50	240	-	9
Magna 1 50-40 F	6/10	1	240								Stratos 50/6 240	6/10	1	50	240	-	
Magna 1 50-60 F	6/10	1	240								Stratos 50/8 240	6/10	1	50	240	-	
Magna 1 50-80 F	6/10	1	240								Stratos 50/8 240	6/10	1	50	240	-	
Magna 1 50-100 F	6/10	1	280								Stratos 50/9 280	6/10	1	50	280	-	
Magna 1 50-120 F	6/10	1	280								Stratos 50/12 280	6/10	1	50	280	-	
Magna 1 50-150 F	6/10	1	280								Stratos 50/16 340	6/10	1	50	340	RA	
Magna 1 50-180 F	6/10	1	280								Stratos 50/16 340	6/10	1	50	340	RA	
Magna 50-60 F	6/10	1	280								Stratos 50/6 240	6/10	1	50	240	2x F03	
Magna 50-100 F	6/10	1	240								Stratos 50/10 240	6/10	1	50	240	-	
Magna 50-120 F	6/10	1	280								Stratos 50/9 280	6/10	1	50	280	-	
Magna 50-120 FN	6/10	1	280								Stratos 50/9 280	6/10	1	50	280	-	
Magna UPE 50-60 F	6/10	1	280								Stratos 50/6 240	6/10	1	50	240	2x F03	
Magna UPE 50-60 FB	6/10	1	280								Stratos 50/9 280	6/10	1	50	280	-	
Magna UPE 50-60 FN	6/10	1	280								Stratos 50/9 280	6/10	1	50	280	-	
Magna UPE 50-120 F	6/10	1	280								Stratos 50/9 280	6/10	1	50	280	-	

Grundfos				Hoval													
Type	PN	M	L	Type	PN	M	G/DN	L	AGS	Rem.	Type	PN	M	G/DN	L	AGS	Rem.
Magna UPE 50-120 FN	6/10	1	280								Stratos 50/6 240	6/10	1	50	240	-	
Magna3 50-40 F	6/10	1	240								Stratos 50/6 240	6/10	1	50	240	-	14
Magna3 50-60 F	6/10	1	240								Stratos 50/6 240	6/10	1	50	240	-	14
Magna3 50-80 F	10	1	240								Stratos 50/8 240	6/10	1	50	240	-	14
Magna3 50-100 F	10	1	280								Stratos 50/9 280	6/10	1	50	280	-	14
Magna3 50-120 F	10	1	280								Stratos 50/12 280	6/10	1	50	280	-	14
Magna3 50-150 F	10	1	280								Stratos 50/16 340	6/10	1	50	340	RA	14
Magna3 50-180 F	10	1	280								Stratos 50/16 340	6/10	1	50	340	RA	14
TP 50-30/4	10	3	280								Stratos 50/9 280	6/10	1	50	280	-	9
UMC 50-30	6/10	3/1	280								Stratos 50/6 240	6/10	1	50	240	2x F03	9
UMC 50-60	6/10	3/1	280								Stratos 50/8 240	6/10	1	50	240	2x F03	9
UMK 50-30	6/10	3/1	280								Stratos 50/6 240	6/10	1	50	240	2x F03	9
UMK 50-60	6/10	3/1	280								Stratos 50/8 240	6/10	1	50	240	2x F03	9
UMS 50-30	6/10	3/1	280								Stratos 50/6 240	6/10	1	50	240	2x F03	9
UMS 50-60	6/10	3/1	280								Stratos 50/8 240	6/10	1	50	240	2x F03	9
UP 50-60	6/10	3/1	280								Stratos 50/8 240	6/10	1	50	240	2x F03	9
UPC 50-60	6/10	3/1	280								Stratos 50/9 280	6/10	1	50	280	-	9
UPC 50-120	6/10	3/1	280								Stratos 50/12 280	6/10	1	50	280	-	9
UPC 50-180	6/10	3	280								Stratos 50/16 340	6/10	1	50	340	RA	9
UPE 50-60 F	6/10	1	280								Stratos 50/6 240	6/10	1	50	240	2x F03	
UPE 50-60 FB	6/10	1	250								Stratos 50/9 280	6/10	1	50	280	RA	
UPE 50-80	6/10	1	280								Stratos 50/10 240	6/10	1	50	240	2x F03	
UPE 50-80 F	6/10	1	280								Stratos 50/10 240	6/10	1	50	240	2x F03	
UPE 50-120 F	6/10	3	280								Stratos 50/12 280	6/10	1	50	280	-	9
UPE 50-120 FB	6/10	3	280								Stratos 50/9 280	6/10	1	50	280	-	9
UPK 50-60	6/10	3/1	280								Stratos 50/8 240	6/10	1	50	240	2x F03	9
UPK 50-120	6/10	3/1	280								Stratos 50/12 280	6/10	1	50	280	-	9
UPK 50-180	6/10	3/1	280								Stratos 50/16 340	6/10	1	50	340	RA	9
UPS 50-30 F	6/10	3/1	280								Stratos 50/6 240	6/10	1	50	240	2x F03	9
UPS 50-60	6/10	3	280								Stratos 50/8 240	6/10	1	50	240	2x F03	9
UPS 50-60/2 F	6/10	3/1	280								Stratos 50/9 280	6/10	1	50	280	-	9
UPS 50-60/4 F	6/10	3/1	280								Stratos 50/9 280	6/10	1	50	280	-	9
UPS 50-120	6/10	3/1	280								Stratos 50/12 280	6/10	1	50	280	-	9
UPS 50-120 F	6/10	3/1	280								Stratos 50/12 280	6/10	1	50	280	-	9
UPS 50-180 F	6/10	3/1	280								Stratos 50/16 340	6/10	1	50	340	RA	9
UPS 50-185 F	6/10	3/1	280								Stratos 50/16 340	6/10	1	50	340	RA	9
DN 65																	
GD 65	6/10	3/1	280								Stratos 65/9 280	6/10	1	65	280	-	9
Magna 1 65-40 F	6/10	1	340								Stratos 65/9 280	6/10	1	65	280	2x F11	
Magna 1 65-60 F	6/10	1	340								Stratos 65/9 280	6/10	1	65	280	2x F11	
Magna 1 65-80 F	6/10	1	340								Stratos 65/9 280	6/10	1	65	280	2x F11	
Magna 1 65-100 F	6/10	1	340								Stratos 65/9 280	6/10	1	65	280	2x F11	
Magna 1 65-120 F	6/10	1	340								Stratos 65/12 340	6/10	1	65	340	-	
Magna 1 65-150 F	6/10	1	340								Stratos 65/16 340	6/10	1	65	340	-	
Magna 65-60 F	6/10	1	340								Stratos 65/9 280	6/10	1	65	280	2x F11	
Magna 65-60 FN	6/10	1	340								Stratos 65/12 340	6/10	1	65	340	-	
Magna 65-120 F	6/10	1	340								Stratos 65/12 340	6/10	1	65	340	-	
Magna 65-120 FN	6/10	1	340								Stratos 65/12 340	6/10	1	65	340	-	
Magna UPE 65-60 F	6/10	1	340								Stratos 65/9 280	6/10	1	65	280	2x F11	
Magna UPE 65-60 FB	6/10	1	340								Stratos 65/12 340	6/10	1	65	340	-	
Magna UPE 65-60 FN	6/10	1	340								Stratos 65/12 340	6/10	1	65	340	-	
Magna UPE 65-120 F	6/10	1	340								Stratos 65/12 340	6/10	1	65	340	-	
Magna UPE 65-120 FN	6/10	1	340								Stratos 65/12 340	6/10	1	65	340	-	
Magna3 65-40 F	6/10	1	340								Stratos 65/9 280	6/10	1	65	280	2x F11	14
Magna3 65-60 F	6/10	1	340								Stratos 65/9 280	6/10	1	65	280	2x F11	14
Magna3 65-80 F	10	1	340								Stratos 65/9 280	6/10	1	65	280	2x F11	14
Magna3 65-100 F	10	1	340								Stratos 65/9 280	6/10	1	65	280	2x F11	14
Magna3 65-120 F	10	1	340								Stratos 65/12 340	6/10	1	65	340	-	14
Magna3 65-150 F	10	1	340								Stratos 65/16 340	6/10	1	65	340	-	14
UM 65-26	6/10	3/1	340								Stratos 65/9 280	6/10	1	65	280	2x F11	9
UMC 65-30	6/10	3/1	340								Stratos 65/9 280	6/10	1	65	280	2x F11	9
UMC 65-60	6/10	3/1	340								Stratos 65/9 280	6/10	1	65	280	2x F11	9
UMK 65-30	6/10	3/1	340								Stratos 65/9 280	6/10	1	65	280	2x F11	9
UMK 65-60	6/10	3/1	340								Stratos 65/9 280	6/10	1	65	280	2x F11	9
UMS 65-30	6/10	3/1	340								Stratos 65/9 280	6/10	1	65	280	2x F11	9
UMS 65-60	6/10	3/1	340								Stratos 65/9 280	6/10	1	65	280	2x F11	9
UP 65-75	6/10	3	340								Stratos 65/9 280	6/10	1	65	280	2x F11	9
UP 65-79	6/10	3	340								Stratos 65/9 280	6/10	1	65	280	2x F11	9
UP 65-90	6/10	3	340								Stratos 65/9 280	6/10	1	65	280	2x F11	9
UPC 65-60	6/10	3	340								Stratos 65/9 280	6/10	1	65	280	2x F11	9
UPC 65-120	6/10	3/1	340								Stratos 65/12 340	6/10	1	65	340	-	9
UPC 65-180	6/10	3/1	340								Stratos 65/16 340	6/10	1	65	340	-	9
UPE 65-60 F	6/10	1	340								Stratos 65/9 280	6/10	1	65	280	2x F11	
UPE 65-60 FB	6/10	1	340								Stratos 65/12 340	6/10	1	65	340	-	
UPE 65-120 F	6/10	3	340								Stratos 65/12 340	6/10	1	65	340	-	9
UPE 65-120 FB	6/10	3	340								Stratos 65/12 340	6/10	1	65	340	-	9
UPK 65-60	6/10	3/1	340								Stratos 65/9 280	6/10	1	65	280	2x F11	9
UPK 65-120	6/10	3/1	340								Stratos 65/12 340	6/10	1	65	340	-	9
UPK 65-180	6/10	3	340								Stratos 65/16 340	6/10	1	65	340	-	9

Grundfos				Hoval													
Type	PN	M	L	Type	PN	M	G/DN	L	AGS	Rem.	Type	PN	M	G/DN	L	AGS	Rem.
UPS 65-30	6/10	3/1	340								Stratos 65/9 280	6/10	1	65	280	2x F11	9
UPS 65-30 F	6/10	3/1	340								Stratos 65/9 280	6/10	1	65	280	2x F11	9
UPS 65-60	6/10	3	340								Stratos 65/9 280	6/10	1	65	280	2x F11	9
UPS 65-60/2	6/10	3/1	340								Stratos 65/9 280	6/10	1	65	280	2x F11	9
UPS 65-60/2 F	6/10	3	340								Stratos 65/9 280	6/10	1	65	280	2x F11	9
UPS 65-60/4	6/10	3/1	340								Stratos 65/9 280	6/10	1	65	280	2x F11	9
UPS 65-60/4 F	6/10	3/1	340								Stratos 65/9 280	6/10	1	65	280	2x F11	9
UPS 65-120	6/10	3/1	340								Stratos 65/16 340	6/10	1	65	340	-	9
UPS 65-120 F	6/10	3/1	340								Stratos 65/16 340	6/10	1	65	340	-	9
UPS 65-180	6/10	3/1	340								Stratos 65/16 340	6/10	1	65	340	-	9
UPS 65-180 F	6/10	3/1	340								Stratos 65/16 340	6/10	1	65	340	-	9
UPS 65-185	6/10	3/1	340								Stratos 65/16 340	6/10	1	65	340	-	9
UPS 65-185 F	6/10	3	340								Stratos 65/16 340	6/10	1	65	340	-	9
DN 80																	
GD 80	6/10	3/1	330	Stratos 80/12 360	6	1	PN6	360	RA	9	Stratos 80/12 360	10	1	PN10	360	RA	9
Magna 1 80-40 F	6/10	1	360	Stratos 80/12 360	6	1	PN6	360	-		Stratos 80/12 360	10	1	PN10	360	-	
Magna 1 80-60 F	6/10	1	360	Stratos 80/12 360	6	1	PN6	360	-		Stratos 80/12 360	10	1	PN10	360	-	
Magna 1 80-80 F	6/10	1	360	Stratos 80/12 360	6	1	PN6	360	-		Stratos 80/12 360	10	1	PN10	360	-	
Magna 1 80-100 F	6/10	1	360	Stratos 80/12 360	6	1	PN6	360	-		Stratos 80/12 360	10	1	PN10	360	-	
Magna 1 80-120 F	6/10	1	360	Stratos 80/12 360	6	1	PN6	360	-		Stratos 80/12 360	10	1	PN10	360	-	
Magna3 80-40 F	6/10	1	360	Stratos 80/12 360	6	1	PN6	360	-	14	Stratos 80/12 360	10	1	PN10	360	-	14
Magna3 80-60 F	6/10	1	360	Stratos 80/12 360	6	1	PN6	360	-	14	Stratos 80/12 360	10	1	PN10	360	-	14
Magna3 80-80 F	6/10	1	360	Stratos 80/12 360	6	1	PN6	360	-	14	Stratos 80/12 360	10	1	PN10	360	-	14
Magna3 80-100 F	6/10	1	360	Stratos 80/12 360	6	1	PN6	360	-	14	Stratos 80/12 360	10	1	PN10	360	-	14
Magna3 80-120 F	10	1	360								Stratos 80/12 360	10	1	PN10	360	-	14
UM 80-50	6/10	3	360	Stratos 80/12 360	6	1	PN6	360	-	9	Stratos 80/12 360	10	1	PN10	360	-	9
UMC 80-30	6/10	3	360	Stratos 80/12 360	6	1	PN6	360	-	9	Stratos 80/12 360	10	1	PN10	360	-	9
UMC 80-60	6/10	3	360	Stratos 80/12 360	6	1	PN6	360	-	9	Stratos 80/12 360	10	1	PN10	360	-	9
UMK 80-30	6/10	3	360	Stratos 80/12 360	6	1	PN6	360	-	9	Stratos 80/12 360	10	1	PN10	360	-	9
UMK 80-60	6/10	3	360	Stratos 80/12 360	6	1	PN6	360	-	9	Stratos 80/12 360	10	1	PN10	360	-	9
UMS 80-30	6/10	3	360	Stratos 80/12 360	6	1	PN6	360	-	9	Stratos 80/12 360	10	1	PN10	360	-	9
UMS 80-60	6/10	3	360	Stratos 80/12 360	6	1	PN6	360	-	9	Stratos 80/12 360	10	1	PN10	360	-	9
UP 80-96	6/10	3	360	Stratos 80/12 360	6	1	PN6	360	-	9	Stratos 80/12 360	10	1	PN10	360	-	9
UP 80-113	6/10	3	360	Stratos 80/12 360	6	1	PN6	360	-	9	Stratos 80/12 360	10	1	PN10	360	-	9
UPC 80-120	6/10	3	360	Stratos 80/12 360	6	1	PN6	360	-	9	Stratos 80/12 360	10	1	PN10	360	-	9
UPE 80-120	6	1	360	Stratos 80/12 360	6	1	PN6	360	-								
UPE 80-120 (F)	6/10	3	360	Stratos 80/12 360	6	1	PN6	360	-	9	Stratos 80/12 360	10	1	PN10	360	-	9
UPK 80-120	6/10	3	360	Stratos 80/12 360	6	1	PN6	360	-	9	Stratos 80/12 360	10	1	PN10	360	-	9
UPS 80-30 F	6/10	3	360	Stratos 80/12 360	6	1	PN6	360	-	9	Stratos 80/12 360	10	1	PN10	360	-	9
UPS 80-60 F	6/10	3	360	Stratos 80/12 360	6	1	PN6	360	-	9	Stratos 80/12 360	10	1	PN10	360	-	9
UPS 80-120 F	6/10	3	360	Stratos 80/12 360	6	1	PN6	360	-	9	Stratos 80/12 360	10	1	PN10	360	-	9
DN 100																	
GD 100	6/10	3/1	380	Stratos 100/12 360	6	1	PN6	360	RA	9	Stratos 100/12 360	10	1	PN10	360	RA	9
Magna 1 100-40 F	6/10	1	450	Stratos 100/12 360	6	1	PN6	360	1x F34 / 1x F35		Stratos 100/12 360	10	1	PN10	360	1x F34 / 1x F35	
Magna 1 100-60 F	6/10	1	450	Stratos 100/12 360	6	1	PN6	360	1x F34 / 1x F35		Stratos 100/12 360	10	1	PN10	360	1x F34 / 1x F35	
Magna 1 100-80 F	6/10	1	450	Stratos 100/12 360	6	1	PN6	360	1x F34 / 1x F35		Stratos 100/12 360	10	1	PN10	360	1x F34 / 1x F35	
Magna 1 100-100 F	6/10	1	450	Stratos 100/12 360	6	1	PN6	360	1x F34 / 1x F35		Stratos 100/12 360	10	1	PN10	360	1x F34 / 1x F35	
Magna 1 100-120 F	6/10	1	450	Stratos 100/12 360	6	1	PN6	360	1x F34 / 1x F35		Stratos 100/12 360	10	1	PN10	360	1x F34 / 1x F35	
Magna3 100-40 F	6/10	1	450	Stratos 100/12 360	6	1	PN6	360	1x F34 / 1x F35	14	Stratos 100/12 360	10	1	PN10	360	1x F34 / 1x F35	14
Magna3 100-60 F	6/10	1	450	Stratos 100/12 360	6	1	PN6	360	1x F34 / 1x F35	14	Stratos 100/12 360	10	1	PN10	360	1x F34 / 1x F35	14
Magna3 100-80 F	6/10	1	450	Stratos 100/12 360	6	1	PN6	360	1x F34 / 1x F35	14	Stratos 100/12 360	10	1	PN10	360	1x F34 / 1x F35	14
Magna3 100-100 F	10	1	450								Stratos 100/12 360	10	1	PN10	360	1x F34 / 1x F35	14
Magna3 100-120 F	10	1	450								Stratos 100/12 360	10	1	PN10	360	1x F34 / 1x F35	14
UMC 100-30	6/10	3	450	Stratos 100/12 360	6	1	PN6	360	1x F34 / 1x F35	9	Stratos 100/12 360	10	1	PN10	360	1x F34 / 1x F35	9
UMC 100-60	6/10	3	450	Stratos 100/12 360	6	1	PN6	360	1x F34 / 1x F35	9	Stratos 100/12 360	10	1	PN10	360	1x F34 / 1x F35	9
UMK 100-30	6/10	3	450	Stratos 100/12 360	6	1	PN6	360	1x F34 / 1x F35	9	Stratos 100/12 360	10	1	PN10	360	1x F34 / 1x F35	9
UMK 100-60	6/10	3	450	Stratos 100/12 360	6	1	PN6	360	1x F34 / 1x F35	9	Stratos 100/12 360	10	1	PN10	360	1x F34 / 1x F35	9
UMS 100-30	6/10	3	450	Stratos 100/12 360	6	1	PN6	360	1x F34 / 1x F35	9	Stratos 100/12 360	10	1	PN10	360	1x F34 / 1x F35	9
UMS 100-60	6/10	3	450	Stratos 100/12 360	6	1	PN6	360	1x F34 / 1x F35	9	Stratos 100/12 360	10	1	PN10	360	1x F34 / 1x F35	9
UPE 100-60 F	6/10	3	450	Stratos 100/12 360	6	1	PN6	360	1x F34 / 1x F35	9	Stratos 100/12 360	10	1	PN10	360	1x F34 / 1x F35	9
UPS 100-30 F	6/10	3	450	Stratos 100/12 360	6	1	PN6	360	1x F34 / 1x F35	9	Stratos 100/12 360	10	1	PN10	360	1x F34 / 1x F35	9
DN 125																	
GD 125	6/10	3	450	Stratos 100/12 360	6	1	PN6	360	RA	9	Stratos 100/12 360	10	1	PN10	360	RA	9

Grundfos				Hoval Highly efficient							Hoval Premium highly efficient						
Type	PN	M	L	Type	PN	M	G/DN	L	AGS	Rem.	Type	PN	M	G/DN	L	AGS	Rem.
Solar circulating pumps																	
UPS Solar 15-45	10	1	130	SPS-S 15/6 130 SMO	6	1	G1	130	-		Stratos Pico 15/4 130	6	1	G1	130	-	
UPS Solar 15-60	10	1	130	SPS-S 15/6 130 SMO	6	1	G1	130	-		Stratos Pico 15/6 130	6	1	G1	130	-	
UPS Solar 15-65	10	1	130	SPS-S 15/6 130 SMO	6	1	G1	130	-		Stratos Pico 15/6 130	6	1	G1	130	-	
UPS Solar 15-80	10	1	130	SPS-S 15/7.5 130 SMO	6	1	G1	130	-								
UPS Solar 25-40	10	1	180	SPS-S 25/6 180 SMO	6	1	G1½	180	-		Stratos Pico 25/4 180	6	1	G1½	180	-	
UPS Solar 25-45	10	1	180	SPS-S 25/6 180 SMO	6	1	G1½	180	-		Stratos Pico 25/4 180	6	1	G1½	180	-	
UPS Solar 25-60	10	1	180	SPS-S 25/6 180 SMO	6	1	G1½	180	-		Stratos Pico 25/6 180	6	1	G1½	180	-	
UPS Solar 25-65	10	1	180	SPS-S 25/7.5 180 SMO	6	1	G1½	180	-		Stratos Pico 25/6 180	6	1	G1½	180	-	

Grundfos				Hoval Highly efficient							Hoval Premium highly efficient						
Type	PN	M	L	Type	PN	M	G/DN	L	AGS	Rem.	Type	PN	M	G/DN	L	AGS	Rem.
Circulating pumps domestic hot water																	
Rp ½																	
UP 15-13 B	10	1	86								Star-Z Nova 15	10	1	Rp½	84	RA	
UP 15-13 BU	10	1	86								Motor Star-Z 15 TT	-	1	-	-	-	
UP 15-13 BX	10	1	130	SPS-Z 15/7 130 SMO	10	1	G1	130	RA		Star-Z Nova 15	10	1	Rp½	84	RA	
UP 15-13 BXU	10	1	130	SPS-Z 15/7 130 SMO	10	1	G1	130	RA		Motor Star-Z 15 TT	-	1	-	-	-	
UP 15-14 B	10	1	86								Star-Z Nova 15	10	1	Rp½	84	RA	
UP 15-14 B Comfort	10	1	80								Motor Star-Z Nova 15	-	1	-	-	-	
UP 15-14 BT	10	1	130	SPS-Z 15/7 130 SMO	10	1	G1	130	RA		Star-Z Nova 15	10	1	Rp½	84	RA	
UP 15-14 BT Comfort	10	1	80								Motor Star-Z 15 TT	-	1	-	-	-	
UP 15-14 BU	10	1	86								Star-Z Nova 15	10	1	Rp½	84	RA	
UP 15-14 BU Comfort	10	1	80								Motor Star-Z 15 TT	-	1	-	-	-	
UP 15-14 BUT	10	1	130	SPS-Z 15/7 130 SMO	10	1	G1	130	RA		Star-Z Nova 15	10	1	Rp½	84	RA	
UP 15-14 BUT Comfort	10	1	80								Motor Star-Z 15 TT	-	1	-	-	-	
G 1¼ (Rp ¾)																	
UM 20-07 N	10	1	150	SPS-Z 20/7 150 SMO	10	1	G1¼	150	-								
UM 24-08 N	10	1	150	SPS-Z 20/7 150 SMO	10	1	G1¼	150	-								
UM 25-08 N	10	1	150	SPS-Z 20/7 150 SMO	10	1	G1¼	150	-								
UM 25-12 N	10	3/1	150	SPS-Z 20/7 150 SMO	10	1	G1¼	150	-	9							
UP 15-15 N	10	1	150	SPS-Z 20/7 150 SMO	10	1	G1¼	150	-								
UP 15-25 N	10	1	150	SPS-Z 20/7 150 SMO	10	1	G1¼	150	-								
UP 20-07 N	10	1	150	SPS-Z 20/7 150 SMO	10	1	G1¼	150	-								
UP 20-07 NX	10	1	150	SPS-Z 20/7 150 SMO	10	1	G1¼	150	-								
UP 20-14 BX	10	1	150	SPS-Z 20/7 150 SMO	10	1	G1¼	150	-								
UP 20-14 BX Comfort	10	1	110	SPS-Z 20/7 150 SMO	10	1	G1¼	150	RA								
UP 20-14 BXT	10	1	150	SPS-Z 20/7 150 SMO	10	1	G1¼	150	-		Motor Star-Z 15 TT	-	1	-	-	-	
UP 20-14 BXT Comfort	10	1	110	SPS-Z 20/7 150 SMO	10	1	G1¼	150	RA		Motor Star-Z 15 TT	-	1	-	-	-	
UP 20-14 BXU	10	1	150	SPS-Z 20/7 150 SMO	10	1	G1¼	150	-		Motor Star-Z 15 TT	-	1	-	-	-	
UP 20-14 BXU Comfort	10	1	110	SPS-Z 20/7 150 SMO	10	1	G1¼	150	RA		Motor Star-Z 15 TT	-	1	-	-	-	
UP 20-14 BXUT	10	1	150	SPS-Z 20/7 150 SMO	10	1	G1¼	150	-		Star-Z 15 TT 138	10	1	G1	138	RA	
UP 20-14 BXUT Comfort	10	1	110	SPS-Z 20/7 150 SMO	10	1	G1¼	150	RA		Motor Star-Z 15 TT	-	1	-	-	-	
UP 20-15 N	10	3/1	150	SPS-Z 20/7 150 SMO	10	1	G1¼	150	-	9							
UP 20-15 NX	10	1	150	SPS-Z 20/7 150 SMO	10	1	G1¼	150	-								
UP 20-30 N	10	3/1	150	SPS-Z 20/7 150 SMO	10	1	G1¼	150	-	9							
UP 20-45 N	10	3/1	150	SPS-Z 20/7 150 SMO	10	1	G1¼	150	-	9							
UP 25-30 N	10	3/1	150	SPS-Z 20/7 150 SMO	10	1	G1¼	150	-	9							
UP 25-45 N	10	3/1	150	SPS-Z 20/7 150 SMO	10	1	G1¼	150	-	9							
G 1½ (Rp 1)																	
Alpha+ 25-40 B	10	1	180	SPS-Z 25/7 180 SMO	10	1	G1½	180	-		Stratos Pico-Z 25/6 180	10	1	G1½	180	-	
Alpha+ 25-60 B	10	1	180	SPS-Z 25/7 180 SMO	10	1	G1½	180	-		Stratos Pico-Z 25/6 180	10	1	G1½	180	-	
Magna3 25-40 N	10	1	180	SPS-Z 25/7 180 SMO	10	1	G1½	180	-		Stratos-Z 30/8 180	10	1	G2	180	RA	
Magna3 25-60 N	10	1	180	SPS-Z 25/7 180 SMO	10	1	G1½	180	-		Stratos-Z 30/8 180	10	1	G2	180	RA	
Magna3 25-80 N	10	1	180	Top-Z 30/10 180	10	1	G2	180	RA		Stratos-Z 30/8 180	10	1	G2	180	RA	
UM 26-20 Z	10	3/1	180	SPS-Z 25/7 180 SMO	10	1	G1½	180	-	9	Stratos Pico-Z 25/6 180	10	1	G1½	180	-	9
UP 25-55 B	10	3/1	180	Top-Z 25/6 180	10	1	G1½	180	-	9	Stratos-Z 30/8 180	10	1	G2	180	RA	9
UP 25-60 B	10	1	180	Top-Z 25/6 180	10	1	G1½	180	-		Stratos-Z 30/8 180	10	1	G2	180	RA	
UP 25-80 B	10	3	180	Top-Z 30/10 180	10	1	G2	180	RA	9	Stratos-Z 30/8 180	10	1	G2	180	RA	9
UP 26-35 Z	10	1	180	SPS-Z 25/7 180 SMO	10	1	G1½	180	-		Stratos Pico-Z 25/6 180	10	1	G1½	180	-	
UP 26-50 Z	10	1	180	SPS-Z 25/7 180 SMO	10	1	G1½	180	-		Stratos Pico-Z 25/6 180	10	1	G1½	180	-	
UPE 25-40 B	10	1	180	SPS-Z 25/7 180 SMO	10	1	G1½	180	-		Stratos Pico-Z 25/6 180	10	1	G1½	180	-	
UPE 25-60 B	10	1	180	SPS-Z 25/7 180 SMO	10	1	G1½	180	-		Stratos Pico-Z 25/6 180	10	1	G1½	180	-	
UPS 20-60 B	10	1	180	Top-Z 25/6 180	10	1	G1½	180	-		Stratos-Z 30/8 180	10	1	G2	180	RA	
UPS 25-40 B	10	1	180	SPS-Z 25/7 180 SMO	10	1	G1½	180	-		Stratos Pico-Z 25/6 180	10	1	G1½	180	-	
UPS 25-55 N	10	1	180								Stratos-Z 30/8 180	10	1	G2	180	RA	
UPS 25-60 B	10	1	180	SPS-Z 25/7 180 SMO	10	1	G1½	180	-		Stratos Pico-Z 25/6 180	10	1	G1½	180	-	
UPS 25-80 B	10	1	180	Top-Z 30/10 180	10	1	G2	180	RA		Stratos-Z 30/8 180	10	1	G2	180	RA	
G 2 (Rp 1¼)																	
Magna 32-100 N	10	1	180	Top-Z 30/10 180	10	1	G2	180	-		Stratos-Z 30/12 180	10	1	G2	180	-	
Magna3 32-40 N	6/10	1	180	SPS-Z 25/7 180 SMO	10	1	G1½	180	RA	14	Stratos-Z 30/8 180	10	1	G2	180	-	14
Magna3 32-60 N	6/10	1	180	SPS-Z 25/7 180 SMO	10	1	G1½	180	RA	14	Stratos-Z 30/8 180	10	1	G2	180	-	14
Magna3 32-80 N	6/10	1	180							14	Stratos-Z 30/8 180	10	1	G2	180	-	14
Magna3 32-100 N	6/10	1	180	Top-Z 30/10 180	10	1	G2	180	-	14	Stratos-Z 30/12 180	10	1	G2	180	-	14
UP 32-80 B	10	3	180	Top-Z 30/10 180	10	1	G2	180	-	9	Stratos-Z 30/8 180	10	1	G2	180	-	9
UP 35 RZ	10	3/1	180	Top-Z 25/6 180	10	1	G1½	180	RA	9	Stratos Pico-Z 25/6 180	10	1	G1½	180	RA	9

Grundfos				Hoval Highly efficient							Hoval Premium highly efficient						
Type	PN	M	L	Type	PN	M	G/DN	L	AGS	Rem.	Type	PN	M	G/DN	L	AGS	Rem.
UP 40-75 RB	10	3/1	180	SPS-Z 25/7 180 SMO	10	1	G1½	180	RA	9	Stratos-Z 30/8 180	10	1	G2	180	-	9
UP 45 RZ	10	3/1	180	SPS-Z 25/7 180 SMO	10	1	G1½	180	RA	9	Stratos Pico-Z 25/6 180	10	1	G1½	180	RA	9
UPE 32-80 B	10	1	180	SPS-Z 25/7 180 SMO	10	1	G1½	180	RA	14	Stratos-Z 30/8 180	10	1	G2	180	-	14
UPS 32-80 B	10	1	180	Top-Z 30/10 180	10	1	G2	180	-		Stratos-Z 30/8 180	10	1	G2	180	-	
UPS 40-80 RB	10	3/1	180	Top-Z 30/10 180	10	1	G2	180	-	9	Stratos-Z 30/12 180	10	1	G2	180	-	9
DN 32																	
Magna 32-120 FN	6/10	1	220								Stratos-Z 30/12 180	10	1	G2	180	RA	
Magna UPE 32-120 FB	6/10	1	220								Stratos-Z 30/12 180	10	1	G2	180	RA	
Magna UPE 32-120 FN	6/10	1	220								Stratos-Z 30/12 180	10	1	G2	180	RA	
Magna3 32-40 FN	6/10	1	220								Stratos-Z 30/8 180	10	1	G2	180	RA	
Magna3 32-60 FN	6/10	1	220								Stratos-Z 30/8 180	10	1	G2	180	RA	
Magna3 32-80 FN	6/10	1	220								Stratos-Z 30/8 180	10	1	G2	180	RA	
Magna3 32-100 FN	6/10	1	220								Stratos-Z 30/12 180	10	1	G2	180	RA	
Magna3 32-120 FN	6/10	1	220								Stratos-Z 30/12 180	10	1	G2	180	RA	
UPE 32-80 FB	6/10	1	220								Stratos-Z 30/8 180	10	1	G2	180	RA	
UPE 32-120 FB	6/10	1	220								Stratos-Z 30/12 180	10	1	G2	180	RA	
UPS 32-30 FB	6/10	3/1	220	Top-Z 30/10 180	10	1	G2	180	RA	9	Stratos-Z 30/8 180	10	1	G2	180	RA	9
UPS 32-60 FB	6/10	3/1	220	Top-Z 30/10 180	10	1	G2	180	RA	9	Stratos-Z 30/8 180	10	1	G2	180	RA	9
UPS 32-120 FB	6/10	3/1	220	Top-Z 30/10 180	10	1	G2	180	RA	9	Stratos-Z 30/12 180	10	1	G2	180	RA	9
DN 32 4-edge flange																	
UP 35 Z	10	3/1	200	SPS-Z 25/7 180 SMO	10	1	G1½	180	RA	9	Stratos Pico-Z 25/6 180	10	1	G1½	180	RA	9
UP 45 Z	10	3/1	200	SPS-Z 25/7 180 SMO	10	1	G1½	180	RA	9	Stratos Pico-Z 25/6 180	10	1	G1½	180	RA	9
DN 40																	
Magna 40-120 FN	6/10	1	250								Stratos-Z 40/12 250	6/10	1	40	250	-	
Magna UPE 40-120 FB	6/10	1	250								Stratos-Z 40/12 250	6/10	1	40	250	-	
Magna UPE 40-120 FN	6/10	1	250								Stratos-Z 40/12 250	6/10	1	40	250	-	
Magna3 40-100 FN	6/10	1	220								Stratos-Z 40/12 250	6/10	1	40	250	RA	14
Magna3 40-120 FN	6/10	1	250								Stratos-Z 40/12 250	6/10	1	40	250	-	14
Magna3 40-150 FN	6/10	1	250														
Magna3 40-180 FN	6/10	1	250														
Magna3 40-80 FN	6/10	1	220								Stratos-Z 40/8 220	6/10	1	40	220	-	
UMC 40-30 B	10	3/1	250	Top-Z 40/7 250	10	3	40	250	-	9	Stratos-Z 40/8 220	6/10	1	40	220	1x F01	9
UMS 40-30 B	10	3	250	Top-Z 40/7 250	10	3	40	250	-	9	Stratos-Z 40/8 220	6/10	1	40	220	1x F01	9
UP 40-50 FB	6/10	3	250	Top-Z 40/7 250	10	3	40	250	-	9	Stratos-Z 40/8 220	6/10	1	40	220	1x F01	9
UP 40-80 FB	6	3	250	Top-Z 40/7 250	10	3	40	250	-	9	Stratos-Z 40/8 220	6/10	1	40	220	1x F01	9
UP 42-42 FB	10	3/1	250	Top-Z 40/7 250	10	3	40	250	-	9	Stratos-Z 40/8 220	6/10	1	40	220	1x F01	9
UP 42-50 FB	10	3	250	Top-Z 40/7 250	10	3	40	250	-	9	Stratos-Z 40/8 220	6/10	1	40	220	1x F01	9
UP 42-70 FB	6	3/1	250	Top-Z 40/7 250	10	3	40	250	-	9	Stratos-Z 40/8 220	6/10	1	40	220	1x F01	9
UP 42-80 FB	6	3/1	250	Top-Z 40/7 250	10	3	40	250	-	9	Stratos-Z 40/8 220	6/10	1	40	220	1x F01	9
UPC 40-120 B	10	3	250								Stratos-Z 40/12 250	6/10	1	40	250	-	9,14
UPC 40-180 B	10	3	250								Stratos-Z 40/12 250	6/10	1	40	250	-	9,14
UPC 40-60 B	10	3	250	Top-Z 40/7 250	10	3	40	250	-	9	Stratos-Z 40/8 220	6/10	1	40	220	1x F01	9
UPE 40-120 FB	6/10	1	250								Stratos-Z 40/12 250	6/10	1	40	250	-	
UPE 40-80 FB	6/10	1	250								Stratos-Z 40/8 220	6/10	1	40	220	1x F01	9
UPS 40-120 FB	6/10	3/1	250								Stratos-Z 40/8 220	6/10	1	40	220	1x F01	9
UPS 40-180 FB	6/10	3/1	250								Stratos-Z 40/12 250	6/10	1	40	250	-	9
UPS 40-30 FB	6/10	3/1	250	Top-Z 40/7 250	10	3	40	250	-	9	Stratos-Z 40/8 220	6/10	1	40	220	1x F01	9
UPS 40-50 FB	6/10	3/1	250	Top-Z 40/7 250	10	3	40	250	-	9	Stratos-Z 40/8 220	6/10	1	40	220	1x F01	9
UPS 40-52 FB	10	1	250	Top-Z 40/7 250	10	3	40	250	-		Stratos-Z 40/8 220	6/10	1	40	220	1x F01	
UPS 40-60 B	10	3	250	Top-Z 40/7 250	10	3	40	250	-	9	Stratos-Z 40/8 220	6/10	1	40	220	1x F01	9
UPS 40-60/2 FB	6/10	3/1	250	Top-Z 40/7 250	10	3	40	250	-	9	Stratos-Z 40/8 220	6/10	1	40	220	1x F01	9
UPS 40-60/4 FB	6/10	3/1	250	Top-Z 40/7 250	10	3	40	250	-	9	Stratos-Z 40/8 220	6/10	1	40	220	1x F01	9
UPS 42-50 FB	6/10	3/1	250	Top-Z 40/7 250	10	3	40	250	-	9	Stratos-Z 40/8 220	6/10	1	40	220	1x F01	9
DN 50																	
Magna 50-60 FN	6/10	1	280														
Magna 50-120 FN	6/10	1	280														
Magna UPE 50-60 FB	6/10	1	280														
Magna UPE 50-60 FN	6/10	1	280														
Magna UPE 50-120 FN	6/10	1	280														
Magna3 50-40 FN	6/10	1	240														
Magna3 50-60 FN	6/10	1	240														
Magna3 50-80 FN	6/10	1	240														
Magna3 50-100 FN	6/10	1	280														
Magna3 50-120 FN	6/10	1	280														
Magna3 50-150 FN	6/10	1	280														
Magna3 50-180 FN	6/10	1	280														
UMC 50-30 B	10	3	280	Top-Z 50/7 280	10	3	50	280	-	9							
UMC 50-60 B	10	3	280	Top-Z 50/7 280	10	3	50	280	-	9							
UMS 50-30 B	10	3	280	Top-Z 50/7 280	10	3	50	280	-	9							
UMS 50-60 B	10	3	280	Top-Z 50/7 280	10	3	50	280	-	9							
UPC 50-60 B	10	3	280	Top-Z 50/7 280	10	3	50	280	-	9							
UPC 50-120 B	10	3	280														
UPE 50-60 FB	6/10	1	280														
UPE 50-80 FB	6/10	1	280														
UPE 50-120 FB	6/10	3	280														
UPS 50-30 FB	6/10	3/1	280	Top-Z 50/7 280	10	3	50	280	-	9							

Grundfos				Hoval Highly efficient							Hoval Premium highly efficient						
Type	PN	M	L	Type	PN	M	G/DN	L	AGS	Rem.	Type	PN	M	G/DN	L	AGS	Rem.
UPS 50-60/2 FB	6/10	3/1	280	Top-Z 50/7 280	10	3	50	280	-	9							
UPS 50-60/4 FB	6/10	3/1	280	Top-Z 50/7 280	10	3	50	280	-	9							
UPS 50-120 FB	6/10	3/1	280														
UPS 50-180 FB	6/10	3/1	280														
DN 65																	
Magna 65-60 FN	6/10	1	340														
Magna 65-120 FN	6/10	1	340														
Magna UPE 65-60 FB	6/10	1	340														
Magna UPE 65-120 FB	6/10	1	340														
Magna3 65-40 FN	6/10	1	340														
Magna3 65-60 FN	6/10	1	340														
Magna3 65-80 FN	6/10	1	340														
Magna3 65-100 FN	6/10	1	340														
Magna3 65-120 FN	6/10	1	340														
Magna3 65-150 FN	6/10	1	340														
UMC 65-30 B	10	3	340	Top-Z 65/10 340	10	3	65	340	-	9							
UMC 65-60 B	10	3	340	Top-Z 65/10 340	10	3	65	340	-	9							
UMS 65-30 B	10	3	340	Top-Z 65/10 340	10	3	65	340	-	9							
UMS 65-60 B	10	3	340	Top-Z 65/10 340	10	3	65	340	-	9							
UPC 65-60 B	10	3	340	Top-Z 65/10 340	10	3	65	340	-	9							
UPC 65-120 B	10	3	340	Top-Z 65/10 340	10	3	65	340	-	9							
UPE 65-60 FB	6/10	1	340														
UPE 65-120 FB	6/10	3	340														
UPS 65-30 FB	6/10	3/1	340	Top-Z 65/10 340	10	3	65	340	-	9							
UPS 65-60/2 FB	6/10	3/1	340	Top-Z 65/10 340	10	3	65	340	-	9							
UPS 65-60/4 FB	6/10	3/1	340	Top-Z 65/10 340	10	3	65	340	-	9							
UPS 65-120 FB	6/10	3/1	340	Top-Z 65/10 340	10	3	65	340	-	9							
UPS 65-180 FB	6/10	3	340														
DN 80																	
UMC 80-30 B	10	3	360	Top-Z 65/10 340	10	3	65	340	RA	9							
UMC 80-60 B	10	3	360	Top-Z 65/10 340	10	3	65	340	RA	9							
UMS 80-30 B	10	3	360	Top-Z 65/10 340	10	3	65	340	RA	9							
UMS 80-60 B	10	3	360	Top-Z 65/10 340	10	3	65	340	RA	9							
UPC 80-120 B	10	3	360														
UPE 80-120 FB	6	3	360														
UPS 80-30 FB	6/10	3	360	Top-Z 65/10 340	10	3	65	340	RA	9							
UPS 80-60 FB	10	3	360	Top-Z 65/10 340	10	3	65	340	RA	9							
UPS 80-120 FB	6/10	3	360														
DN 100																	
UPS 100-30 FB	10	3	450														
UPE 100-60 FB	10	1	450														
UPE 100-160 FB	6	3	450														

Wilo				Hoval													
Type	PN	M	L	Type	PN	M	G/DN	L	AGS	Rem.	Type	PN	M	G/DN	L	AGS	Rem.
Heating circulating pumps																	
G 1 (Rp ½)																	
Star-E 15/1-3	10	1	130	HSP 15/4 130 SMO	6	1	G1	130	-		Stratos Pico 15/4 130	10	1	G1	130	-	
Star-E 15/1-5	10	1	130	HSP 15/6 130 SMO	6	1	G1	130	-		Stratos Pico 15/6 130	10	1	G1	130	-	
Star-E 20/1-3	10	1	130	HSP 15/4 130 SMO	6	1	G1	130	-		Stratos Pico 15/4 130	10	1	G1	130	-	
Star-E 20/1-5	10	1	130	HSP 15/6 130 SMO	6	1	G1	130	-		Stratos Pico 15/6 130	10	1	G1	130	-	
Star RS 15/4	10	1	130	HSP 15/4 130 SMO	6	1	G1	130	-		Stratos Pico 15/4 130	10	1	G1	130	-	
Star RS 15/6	10	1	130	HSP 15/6 130 SMO	6	1	G1	130	-		Stratos Pico 15/6 130	10	1	G1	130	-	
Stratos Eco 15/1-3	10	1	130	HSP 15/4 130 SMO	6	1	G1	130	-		Stratos Pico 15/4 130	10	1	G1	130	-	
Stratos Eco 15/1-5	10	1	130	HSP 15/6 130 SMO	6	1	G1	130	-		Stratos Pico 15/6 130	10	1	G1	130	-	
Stratos Pico 15/1-4	10	1	130	HSP 15/4 130 SMO	6	1	G1	130	-		Stratos Pico 15/4 130	10	1	G1	130	-	
Stratos Pico 15/1-6	10	1	130	HSP 15/6 130 SMO	6	1	G1	130	-		Stratos Pico 15/6 130	10	1	G1	130	-	
Yonos Pico 15/1-4	6	1	130	HSP 15/4 130 SMO	6	1	G1	130	-		Stratos Pico 15/4 130	10	1	G1	130	-	
Yonos Pico 15/1-6	6	1	130	HSP 15/6 130 SMO	6	1	G1	130	-		Stratos Pico 15/6 130	10	1	G1	130	-	
Yonos Pico plus 15/1-4	10	1	130	HSP 15/4 130 SMO	6	1	G1	130	-		Stratos Pico 15/4 130	10	1	G1	130	-	
Yonos Pico plus 15/1-6	10	1	130	HSP 15/6 130 SMO	6	1	G1	130	-		Stratos Pico 15/6 130	10	1	G1	130	-	
G 1¼ (Rp ¾)																	
P 20-1	10	1	140	HSP 15/4 130 SMO	6	1	G1	130	RA		Stratos Pico 15/4 130	10	1	G1	130	RA	
P 20-2	10	1	140	HSP 15/4 130 SMO	6	1	G1	130	RA		Stratos Pico 15/4 130	10	1	G1	130	RA	
S 20-1	6	1	140	HSP 15/4 130 SMO	6	1	G1	130	RA		Stratos Pico 15/4 130	10	1	G1	130	RA	
S 20-2	6	1	140	HSP 15/4 130 SMO	6	1	G1	130	RA		Stratos Pico 15/4 130	10	1	G1	130	RA	
G 1½ (Rp 1)																	
Atmos Pico 25/1-4	10	1	180	HSP 25/4 180 SMO	6	1	G1½	180	-		Stratos Pico 25/4 180	6	1	G1½	180	-	
Atmos Pico 25/1-6	10	1	180	HSP 25/6 180 SMO	6	1	G1½	180	-		Stratos Pico 25/6 180	6	1	G1½	180	-	
E 25/1-5	10	1	180	HSP 25/6 180 SMO	6	1	G1½	180	-		Stratos Pico 25/6 180	6	1	G1½	180	-	
H 25	10	3/1	180	SPS-I 25/8 180	10	1	G1½	180	-		Stratos 25/6 180	10	1	G1½	180	-	
P 25	10	1	180	HSP 25/6 180 SMO	6	1	G1½	180	-		Stratos Pico 25/6 180	6	1	G1½	180	-	
P 25-1	10	1	180	HSP 25/6 180 SMO	6	1	G1½	180	-		Stratos Pico 25/6 180	6	1	G1½	180	-	
P 25-2	10	1	180	HSP 25/6 180 SMO	6	1	G1½	180	-		Stratos Pico 25/6 180	6	1	G1½	180	-	
RH 25	10	3/1	180	SPS-I 25/8 180	10	1	G1½	180	-		Stratos 25/6 180	10	1	G1½	180	-	
RP 25	10	3/1	180	HSP 25/6 180 SMO	6	1	G1½	180	-		Stratos Pico 25/6 180	6	1	G1½	180	-	
RP 25-1	10	3/1	180	HSP 25/6 180 SMO	6	1	G1½	180	-		Stratos Pico 25/6 180	6	1	G1½	180	-	
RP 25-5	10	3/1	180	HSP 25/6 180 SMO	6	1	G1½	180	-		Stratos Pico 25/6 180	6	1	G1½	180	-	
RP 25/60-2	10	1	180	HSP 25/6 180 SMO	6	1	G1½	180	-		Stratos Pico 25/6 180	6	1	G1½	180	-	
RP 25/60 r	10	1	180	HSP 25/6 180 SMO	6	1	G1½	180	-		Stratos Pico 25/6 180	6	1	G1½	180	-	
RP 25/80 v (r)	10	1	180	HSP 25/6 180 SMO	6	1	G1½	180	-		Stratos Pico 25/6 180	6	1	G1½	180	-	
RP 25/100 v (r)	10	1	180	SPS-I 25/8 180	10	1	G1½	180	-		Stratos 25/6 180	10	1	G1½	180	-	
RS 25	10	1	180	HSP 25/4 180 SMO	6	1	G1½	180	-		Stratos Pico 25/4 180	6	1	G1½	180	-	
RS 25V	10	1	180	HSP 25/6 180 SMO	6	1	G1½	180	-		Stratos Pico 25/6 180	6	1	G1½	180	-	
RS 25-1 (v)	10	1	180	HSP 25/4 180 SMO	6	1	G1½	180	-		Stratos Pico 25/4 180	6	1	G1½	180	-	
RS 25-2	10	1	180	HSP 25/4 180 SMO	6	1	G1½	180	-		Stratos Pico 25/4 180	6	1	G1½	180	-	
RS 25/3 E (n)	10	1	180	HSP 25/4 180 SMO	6	1	G1½	180	-		Stratos Pico 25/4 180	6	1	G1½	180	-	
RS 25/50 (r)	10	1	180	HSP 25/4 180 SMO	6	1	G1½	180	-		Stratos Pico 25/4 180	6	1	G1½	180	-	
RS 25/60 v (r)	10	1	180	HSP 25/4 180 SMO	6	1	G1½	180	-		Stratos Pico 25/4 180	6	1	G1½	180	-	
RS 25/70 v (r)	10	1	180	HSP 25/6 180 SMO	6	1	G1½	180	-		Stratos Pico 25/6 180	6	1	G1½	180	-	
RS 25/80 (v) (r)	10	3/1	180	SPS-I 25/8 180	10	1	G1½	180	-		Stratos 25/6 180	10	1	G1½	180	-	
RSE 25	10	1	180	HSP 25/4 180 SMO	6	1	G1½	180	-		Stratos Pico 25/4 180	6	1	G1½	180	-	
RSL 25/70 r	10	1	180	HSP 25/6 180 SMO	6	1	G1½	180	-	7	Stratos Pico 25/6 180	6	1	G1½	180	-	7
S 25	6	1	180	HSP 25/4 180 SMO	6	1	G1½	180	-		Stratos Pico 25/4 180	6	1	G1½	180	-	
S 25 (R 1)	10	3/1	180	HSP 25/4 180 SMO	6	1	G1½	180	-		Stratos Pico 25/4 180	6	1	G1½	180	-	
S 25-1	6	1	180	HSP 25/4 180 SMO	6	1	G1½	180	-		Stratos Pico 25/4 180	6	1	G1½	180	-	
S 25-1 (R 1)	10	3/1	180	HSP 25/6 180 SMO	6	1	G1½	180	-		Stratos Pico 25/6 180	6	1	G1½	180	-	
S 25-2	6	1	180	HSP 25/4 180 SMO	6	1	G1½	180	-		Stratos Pico 25/4 180	6	1	G1½	180	-	
S 30-1	6	3/1	180	SPS-I 25/8 180	10	1	G1½	180	-		Stratos 25/6 180	10	1	G1½	180	-	
S 30-1 (R 1)	10	3/1	180	SPS-I 25/8 180	10	1	G1½	180	-		Stratos 25/6 180	10	1	G1½	180	-	
Smart 15/4-130	10	1	130	HSP 15/4 130 SMO	6	1	G1	130	1x PAS12		Stratos Pico 25/4 130	6	1	G1½	130	-	
Smart 15/6-130	10	1	130	HSP 15/6 130 SMO	6	1	G1	130	1x PAS12		Stratos Pico 25/6 130	6	1	G1½	130	-	
Smart 25/4	10	1	180	HSP 25/4 180 SMO	6	1	G1½	180	-		Stratos Pico 25/4 180	6	1	G1½	180	-	
Smart 25/4-130	10	1	130	HSP 15/4 130 SMO	6	1	G1	130	1x PAS12		Stratos Pico 25/4 130	6	1	G1½	130	-	
Smart 25/6	10	1	180	HSP 25/6 180 SMO	6	1	G1½	180	-		Stratos Pico 25/6 180	6	1	G1½	180	-	
Smart 25/6-130	10	1	130	HSP 15/6 130 SMO	6	1	G1	130	1x PAS12		Stratos Pico 25/6 130	6	1	G1½	130	-	
Star-E 25/1-3	10	1	180	HSP 25/4 180 SMO	6	1	G1½	180	-		Stratos Pico 25/4 180	6	1	G1½	180	-	
Star-E 25/1-3 130	10	1	130	HSP 15/4 130 SMO	6	1	G1	130	1x PAS12		Stratos Pico 25/4 130	6	1	G1½	130	-	
Star-E 25/1-5	10	1	180	HSP 25/6 180 SMO	6	1	G1½	180	-		Stratos Pico 25/6 180	6	1	G1½	180	-	
Star-E 25/1-5 130	10	1	130	HSP 15/6 130 SMO	6	1	G1	130	1x PAS12		Stratos Pico 25/6 130	6	1	G1½	130	-	
Star-E 25/1-5 IS	10	1	180	HSP 25/6 180 SMO	6	1	G1½	180	-		Stratos Pico 25/6 180	6	1	G1½	180	-	
Star-E 25/1-5 ISSM	10	1	180	SPS-I 25/8 180	10	1	G1½	180	-		Stratos 25/4 180	10	1	G1½	180	-	
Star-E 25/1-5 SSM	10	1	180	SPS-I 25/8 180	10	1	G1½	180	-		Stratos 25/4 180	10	1	G1½	180	-	
Star-E 25/2	10	1	180	HSP 25/4 180 SMO	6	1	G1½	180	-		Stratos Pico 25/4 180	6	1	G1½	180	-	
Star-EL 25/1-5	10	1	180	HSP 25/6 180 SMO	6	1	G1½	180	-	7	Stratos Pico 25/6 180	6	1	G1½	180	-	7
Star-EP 25/1-5	10	1	180	HSP 25/6 180 SMO	6	1	G1½	180	-		Stratos Pico 25/6 180	6	1	G1½	180	-	
Star RS 25/2	10	1	180	HSP 25/4 180 SMO	6	1	G1½	180	-		Stratos Pico 25/4 180	6	1	G1½	180	-	
Star RS 25/4	10	1	180	HSP 25/4 180 SMO	6	1	G1½	180	-		Stratos Pico 25/4 180	6	1	G1½	180	-	
Star RS 25/4-130	10	1	130	HSP 15/6 130 SMO	6	1	G1	130	1x PAS12		Stratos Pico 25/6 180	6	1	G1½	180	-	
Star RS 25/5	10	1	180	HSP 25/6 180 SMO	6	1	G1½	180	-		Stratos Pico 25/6 180	6	1	G1½	180	-	
Star RS 25/6	10	1	180	HSP 25/6 180 SMO	6	1	G1½	180	-		Stratos Pico 25/6 180	6	1	G1½	180	-	
Star RS 25/6-130	10	1	130	HSP 15/6 130 SMO	6	1	G1	130	1x PAS12		Stratos Pico 25/6 130	6	1	G1½	130	-	
Star RSL 25/6	10	1	180	HSP 25/6 180 SMO	6	1	G1½	180	-	7	Stratos Pico 25/6 180	6	1	G1½	180	-	7

Wilo				Hoval													
Type	PN	M	L	Type	PN	M	G/DN	L	AGS	Rem.	Type	PN	M	G/DN	L	AGS	Rem.
Stratos 25/1-4	10	1	180	SPS-I 25/8 180	10	1	G1½	180	-	14	Stratos 25/4 180	10	1	G1½	180	-	14
Stratos 25/1-6	10	1	180	SPS-I 25/8 180	10	1	G1½	180	-	14	Stratos 25/6 180	10	1	G1½	180	-	14
Stratos 25/1-8	10	1	180	SPS-I 25/8 180	10	1	G1½	180	-	14	Stratos 25/8 180	10	1	G1½	180	-	14
Stratos 25/1-10	10	1	180	SPS-I 25/12 180	10	1	G1½	180	-	14	Stratos 25/10 180	10	1	G1½	180	-	14
Stratos 25/1-12	10	1	180	SPS-I 25/12 180	10	1	G1½	180	-	14	Stratos 25/12 180	10	1	G1½	180	-	14
Stratos Eco 25/1-3	10	1	180	HSP 25/4 180 SMO	6	1	G1½	180	-		Stratos Pico 25/4 180	6	1	G1½	180	-	
Stratos Eco 25/1-3 130	10	1	130	HSP 15/4 130 SMO	6	1	G1	130	1x PAS12		Stratos Pico 25/4 130	6	1	G1½	130	-	
Stratos Eco 25/1-3 BMS	10	1	180	SPS-I 25/8 180	10	1	G1½	180	-		Stratos 25/4 180	10	1	G1½	180	-	
Stratos Eco 25/1-5	10	1	180	HSP 25/6 180 SMO	6	1	G1½	180	-		Stratos Pico 25/6 180	6	1	G1½	180	-	
Stratos Eco 25/1-5 130	10	1	130	HSP 15/6 130 SMO	6	1	G1	130	1x PAS12		Stratos Pico 25/6 130	6	1	G1½	130	-	
Stratos Eco 25/1-5 BMS	10	1	180	SPS-I 25/8 180	10	1	G1½	180	-		Stratos 25/6 180	10	1	G1½	180	-	
Stratos Pico 25/1-4	10	1	180	HSP 25/4 180 SMO	6	1	G1½	180	-		Stratos Pico 25/4 180	6	1	G1½	180	-	
Stratos Pico 25/1-4 130	10	1	130	HSP 15/4 130 SMO	6	1	G1	130	1x PAS12		Stratos Pico 25/4 130	6	1	G1½	130	-	
Stratos Pico 25/1-6	10	1	180	HSP 25/6 180 SMO	6	1	G1½	180	-		Stratos Pico 25/6 180	6	1	G1½	180	-	
Stratos Pico 25/1-6 130	10	1	130	HSP 15/6 130 SMO	6	1	G1	130	1x PAS12		Stratos Pico 25/6 130	6	1	G1½	130	-	
Top-E 25/1-7	10	1	180	SPS-I 25/8 180	10	1	G1½	180	-		Stratos 25/6 180	10	1	G1½	180	-	
Top-RS 25/7	10	3/1	180	SPS-I 25/8 180	10	1	G1½	180	-	9	Stratos 25/8 180	10	1	G1½	180	-	9
Top-S 25/5	10	3/1	180	SPS-I 25/8 180	10	1	G1½	180	-	9	Stratos 25/6 180	10	1	G1½	180	-	9
Top-S 25/7	10	3/1	180	SPS-I 25/8 180	10	1	G1½	180	-	9	Stratos 25/8 180	10	1	G1½	180	-	9
Top-S 25/10	10	3/1	180	SPS-I 25/12 180	10	1	G1½	180	-	9	Stratos 25/10 180	10	1	G1½	180	-	9
Top-STG 25/7	10	3/1	180	SPS-I 25/8 180	10	1	G1½	180	-	9	Stratos 25/8 180	10	1	G1½	180	-	9
Top-STG 2510	10	3/1	180	SPS-I 25/8 180	10	1	G1½	180	-	9	Stratos 25/10 180	10	1	G1½	180	-	9
Top-STG 25/13	10	3/1	180	SPS-I 25/12 180	10	1	G1½	180	-	9	Stratos 25/12 180	10	1	G1½	180	-	9
Top-SV 25/7	10	3/1	280	SPS-I 25/8 180	10	1	G1½	180	RA	9	Stratos 25/8 180	10	1	G1½	180	RA	9
Yonos Maxo 25/0.5-7	10	1	180	SPS-I 25/8 180	10	1	G1½	180	-		Stratos 25/8 180	10	1	G1½	180	-	
Yonos Maxo 25/0.5-10	10	1	180	SPS-I 25/12 180	10	1	G1½	180	-		Stratos 25/10 180	10	1	G1½	180	-	
Yonos Maxo 25/0.5-12	10	1	180	SPS-I 25/12 180	10	1	G1½	180	-		Stratos 25/12 180	10	1	G1½	180	-	
Yonos Pico 25/1-4 130	6	1	130	HSP 15/4 130 SMO	6	1	G1	130	1x PAS12		Stratos Pico 25/4 130	6	1	G1½	130	-	
Yonos Pico 25/1-6 130	6	1	130	HSP 15/6 130 SMO	6	1	G1	130	1x PAS12		Stratos Pico 25/6 130	6	1	G1½	130	-	
Yonos Pico 25/1-4 180	6	1	180	HSP 25/4 180 SMO	6	1	G1½	180	-		Stratos Pico 25/4 180	6	1	G1½	180	-	
Yonos Pico 25/1-6 180	6	1	180	HSP 25/6 180 SMO	6	1	G1½	180	-		Stratos Pico 25/6 180	6	1	G1½	180	-	
Yonos Pico 25/1-8 180	6	1	180	SPS-S 25/7.5 SMO	6	1	G1½	180	-								
Yonos Pico plus 25/1-4 130	10	1	130	HSP 15/4 130 SMO	6	1	G1	130	1x PAS12		Stratos Pico 25/4 130	6	1	G1½	130	-	
Yonos Pico plus 25/1-6 130	10	1	130	HSP 15/6 130 SMO	6	1	G1	130	1x PAS12		Stratos Pico 25/6 130	6	1	G1½	130	-	
Yonos Pico plus 25/1-4 180	10	1	180	HSP 25/4 180 SMO	6	1	G1½	180	-		Stratos Pico 25/4 180	6	1	G1½	180	-	
Yonos Pico plus 25/1-6 180	10	1	180	HSP 25/6 180 SMO	6	1	G1½	180	-		Stratos Pico 25/6 180	6	1	G1½	180	-	
G 2 (Rp 1¼)																	
D 30	10	3/1	206	HSP 30/6 180 SMO	6	1	G2	180	1x R09	9	Stratos Pico 30/6 180	6	1	G2	180	1x R09	9
E 30/1-3	10	1	180	HSP 30/4 180 SMO	6	1	G2	180	-		Stratos Pico 30/4 180	6	1	G2	180	-	
E 30/1-5	10	1	180	HSP 30/6 180 SMO	6	1	G2	180	-		Stratos Pico 30/6 180	6	1	G2	180	-	
Eco 30/38R	10	1	180	HSP 30/6 180 SMO	6	1	G2	180	-		Stratos Pico 30/6 180	6	1	G2	180	-	
H 30-1	10	3/1	220	SPS-I 30/8 180	10	1	G2	180	1x R14	9	Stratos 30/8 180	6	1	G2	180	1x R14	9
H 30-1 (250)	10	3/1	250	SPS-I 30/8 180	10	1	G2	180	1x R11	9	Stratos 30/8 180	6	1	G2	180	1x R11	9
H 30-2	10	3/1	220	SPS-I 30/8 180	10	1	G2	180	1x R14	9	Stratos 30/8 180	6	1	G2	180	1x R14	9
H 30-2 (250)	10	3/1	250	SPS-I 30/8 180	10	1	G2	180	1x R11	9	Stratos 30/8 180	6	1	G2	180	1x R11	9
RP 30	10	3/1	180	HSP 30/6 180 SMO	6	1	G2	180	-	9	Stratos Pico 30/6 180	6	1	G2	180	-	9
RP 30 (220)	10	3/1	220	HSP 30/6 180 SMO	6	1	G2	180	1x R14	9	Stratos Pico 30/6 180	6	1	G2	180	1x R14	9
RP 30/80 v (r)	10	3/1	180	HSP 30/4 180 SMO	6	1	G2	180	-	9	Stratos Pico 30/4 180	6	1	G2	180	-	9
RP 30/100 v (r)	10	3/1	180	HSP 30/6 180 SMO	6	1	G2	180	-	9	Stratos 30/6 180	10	1	G2	180	-	9
RP 30-1	10	3/1	180	HSP 30/6 180 SMO	6	1	G2	180	-	9	Stratos Pico 30/6 180	6	1	G2	180	-	9
RP 30 (v)	10	3/1	180	HSP 30/4 180 SMO	6	1	G2	180	-	9	Stratos Pico 30/4 180	6	1	G2	180	-	9
RS 30-1 (v)	10	3/1	180	HSP 30/4 180 SMO	6	1	G2	180	-	9	Stratos Pico 30/4 180	6	1	G2	180	-	9
RS 30-2	10	3/1	180	HSP 30/4 180 SMO	6	1	G2	180	-	9	Stratos Pico 30/4 180	6	1	G2	180	-	9
RS 30/50 v (r)	10	3/1	180	HSP 30/4 180 SMO	6	1	G2	180	-	9	Stratos Pico 30/4 180	6	1	G2	180	-	9
RS 30/60 v (r)	10	3/1	180	HSP 30/4 180 SMO	6	1	G2	180	-	9	Stratos Pico 30/4 180	6	1	G2	180	-	9
RS 30/70 v (r)	10	3/1	180	HSP 30/6 180 SMO	6	1	G2	180	-	9	Stratos Pico 30/6 180	6	1	G2	180	-	9
RS 30/80 v (r)	10	3/1	180	SPS-I 30/8 180	10	1	G2	180	-	9	Stratos 30/6 180	10	1	G2	180	-	9
RS 30/100 v (r)	10	3/1	180	SPS-I 30/12 180	10	1	G2	180	-	9	Stratos 30/12 180	10	1	G2	180	-	9
S 30	6	3/1	220	SPS-A 25/4 130 SMO	6	1	G1½	130	1x R14	9	Stratos Pico 25/4 130	6	1	G1½	130	1x R14	9
S 30-1	10	3/1	180	SPS-A 25/6 130 SMO	6	1	G1½	130	-	9	Stratos Pico 30/6 180	6	1	G2	180	-	9
S 30-2	10	3	220	SPS-A 25/4 130 SMO	6	1	G1½	130	1x R14	9	Stratos Pico 25/4 130	6	1	G1½	130	1x R14	9
S 30/100	10	3/1	220	SPS-I 30/8 180	10	1	G2	180	-	9	Stratos 30/4 180	10	1	G2	180	-	9
Smart 30/4	10	3/1	180	SPS-I 30/8 180	10	1	G2	180	-	9	Stratos 30/4 180	10	1	G2	180	-	9
Smart 30/6	10	3/1	180	HSP 30/6 180 SMO	6	1	G2	180	-	9	Stratos Pico 30/6 180	6	1	G2	180	-	9
Star-E 30/1-3	10	1	180	HSP 30/4 180 SMO	6	1	G2	180	-		Stratos Pico 30/4 180	6	1	G2	180	-	
Star-E 30/1-5	10	1	180	HSP 30/6 180 SMO	6	1	G2	180	-		Stratos Pico 30/6 180	6	1	G2	180	-	
Star-E 30/1-5 IS	10	1	180	HSP 30/6 180 SMO	6	1	G2	180	-		Stratos Pico 30/6 180	6	1	G2	180	-	
Star-E 30/1-5 ISSM	10	1	180								Stratos 30/6 180	10	1	G2	180	-	14
Star-EP 30/1-5	10	1	180														
Star-EP 30/1-5 SSM	10	1	180	HSP 30/6 180 SMO	6	1	G2	180	-		Stratos Pico 30/6 180	6	1	G2	180	-	
Star-RS 30/2	10	1	180	HSP 30/4 180 SMO	6	1	G2	180	-		Stratos Pico 30/4 180	6	1	G2	180	-	
Star-RS 30/4	10	1	180	HSP 30/4 180 SMO	6	1	G2	180	-		Stratos Pico 30/4 180	6	1	G2	180	-	
Star-RS 30/6	10	1	180	HSP 30/6 180 SMO	6	1	G2	180	-		Stratos Pico 30/6 180	6	1	G2	180	-	
Stratos 30/1-4	10	1	180	SPS-I 30/8 180	10	1	G2	180	-		Stratos 30/4 180	10	1	G2	180	-	
Stratos 30/1-6	10	1	180	SPS-I 30/8 180	10	1	G2	180	-		Stratos 30/6 180	10	1	G2	180	-	
Stratos 30/1-8	10	1	180	SPS-I 30/8 180	10	1	G2	180	-		Stratos 30/8 180	10	1	G2	180	-	
Stratos 30/1-10	10	1	180	SPS-I 30/12 180	10	1	G2	180	-		Stratos 30/10 180	10	1	G2	180	-	
Stratos 30/1-12	10	1	180	SPS-I 30/12 180	10	1	G2	180	-		Stratos 30/12 180	10	1	G2	180	-	
Stratos Eco 30/1-3	10	1	180	HSP 30/4 180 SMO	6	1	G2	180	-		Stratos Pico 30/4 180	6	1	G2	180	-	

Wilo				Hoval													
Type	PN	M	L	Type	PN	M	G/DN	L	AGS	Rem.	Type	PN	M	G/DN	L	AGS	Rem.
Stratos Eco 30/1-5	10	1	180	HSP 30/6 180 SMO	6	1	G2	180	-		Stratos Pico 30/6 180	6	1	G2	180	-	
Stratos Eco 30/1-5 BMS	10	1	180	HSP 30/6 180 SMO	6	1	G2	180	-		Stratos 30/4 180	10	1	G2	180	-	
Stratos Pico 30/1-4	10	1	180	HSP 30/4 180 SMO	6	1	G2	180	-		Stratos Pico 30/4 180	6	1	G2	180	-	
Stratos Pico 30/1-6	10	1	180	HSP 30/6 180 SMO	6	1	G2	180	-		Stratos Pico 30/6 180	6	1	G2	180	-	
Top-D 30	10	3/1	180	SPS-I 30/8 180	10	1	G2	180	-	9	Stratos 30/6 180	10	1	G2	180	-	9
Top-E 30/1-7	10	1	180	SPS-I 30/8 180	10	1	G2	180	-		Stratos 30/8 180	10	1	G2	180	-	
Top-E 30/1-10	10	1	180	SPS-I 30/12 180	10	1	G2	180	-		Stratos 30/12 180	10	1	G2	180	-	
Top-EV 30/1-7	10	1	280	SPS-I 30/8 180	10	1	G2	180	-		Stratos 30/6 180	10	1	G2	180	-	
Top-RS 30/7	10	3/1	180	SPS-I 30/8 180	10	1	G2	180	-	9	Stratos 30/8 180	10	1	G2	180	-	9
Top-RS 30/10	10	3/1	180	SPS-I 30/12 180	10	1	G2	180	-	9	Stratos 30/10 180	10	1	G2	180	-	9
Top-S 30/4	10	3/1	180	SPS-I 30/8 180	10	1	G2	180	-	9	Stratos 30/8 180	10	1	G2	180	-	9
Top-S 30/5	10	3/1	180	SPS-I 30/8 180	10	1	G2	180	-	9	Stratos 30/8 180	10	1	G2	180	-	9
Top-S 30/7	10	3/1	180	SPS-I 30/8 180	10	1	G2	180	-	9	Stratos 30/8 180	10	1	G2	180	-	9
Top-S 30/10	10	3/1	180	SPS-I 30/12 180	10	1	G2	180	-	9	Stratos 30/10 180	10	1	G2	180	-	9
Top-SV 30/7	10	3/1	280	SPS-I 30/8 180	10	1	G2	180	RA	9	Stratos 30/8 180	10	1	G2	180	RA	9
Yonos Maxo 30/0.5-7	10	1	180	SPS-I 30/8 180	10	1	G2	180	-		Stratos 30/8 180	10	1	G2	180	-	
Yonos Maxo 30/0.5-10	10	1	180	SPS-I 30/12 180	10	1	G2	180	-		Stratos 30/10 180	10	1	G2	180	-	
Yonos Maxo 30/0.5-12	10	1	180	SPS-I 30/12 180	10	1	G2	180	-		Stratos 30/12 180	10	1	G2	180	-	
Yonos Pico 30/1-4 180	10	1	180	HSP 30/4 180 SMO	6	1	G2	180	-		Stratos Pico 30/4 180	6	1	G2	180	-	
Yonos Pico 30/1-6 180	10	1	180	HSP 30/6 180 SMO	6	1	G2	180	-		Stratos Pico 30/6 180	6	1	G2	180	-	
Yonos Pico 30/1-8 180	10	1	180	SPS-S 30/7.5 180SMO	6	1	G2	180	-								
Yonos Pico plus 30/1-4 180	10	1	180	HSP 30/4 180 SMO	6	1	G2	180	-		Stratos Pico 30/4 180	6	1	G2	180	-	
Yonos Pico plus 30/1-6 180	10	1	180	HSP 30/6 180 SMO	6	1	G2	180	-		Stratos Pico 30/6 180	6	1	G2	180	-	
DN 32																	
Stratos 32/1-10	6/10	1	220	SPS-I 30/12 180	10	1	G2	180	2x RF03	14	Stratos 32/1-10	6/10	1	32	220	-	14
Stratos 32/1-12	6/10	1	220	SPS-I 30/12 180	10	1	G2	180	2x RF03	14	Stratos 32/1-12	6/10	1	32	220	-	14
DN 40																	
D 40	10	3/1	220	SPS-I 30/8 180	10	1	G2	180	1xR08 / 2xRF12	9	Stratos 40/4 220	6/10	1	40	220	-	9
E 40/1-5	10	1	220	SPS-I 30/8 180	10	1	G2	180	1xR08 / 2xRF12		Stratos 40/4 220	6/10	1	40	220	-	
P 40/100 v (r)	6/10	3/1	250	SPS-I 40/8 220	10	1	40	220	1x F01	9	Stratos 40/4 220	6/10	1	40	220	1x F01	9
P 40/140	6/10	3	320	SPS-I 40/8 220	10	1	40	220	2x F26	9	Stratos 40/4 220	6/10	1	40	220	2x F26	9
P 40/160 (v) (r)	6	3	320	SPS-I 40/8 220	10	1	40	220	2x F26	9	Stratos 40/8 220	6/10	1	40	220	2x F26	9
P 40-1	6/10	3/1	250	SPS-I 40/8 220	10	1	40	220	1x F01	9	Stratos 40/4 220	6/10	1	40	220	1x F01	9
P 40-2	6/10	3/1	250	SPS-I 40/8 220	10	1	40	220	1x F01	9	Stratos 40/4 220	6/10	1	40	220	1x F01	9
RS 40	6/10	3/1	220	SPS-I 40/8 220	10	1	40	220	-	9	Stratos 40/4 220	6/10	1	40	220	-	9
S 40/80 v (r)	6/10	3/1	220	SPS-I 40/8 220	10	1	40	220	-	9	Stratos 40/4 220	6/10	1	40	220	-	9
S 40/90 (v) (r)	6/10	3/1	250	SPS-I 40/8 220	10	1	40	220	1x F01	9	Stratos 40/8 220	6/10	1	40	220	1x F01	9
Star-E 40/1-5	6/10	1	220	SPS-I 40/8 220	10	1	40	220	-		Stratos 40/4 220	6/10	1	40	220	-	
Stratos 40/1-4	6/10	1	220	SPS-I 30/8 180	10	1	G2	180	1xR08 / 2xRF12	14	Stratos 40/4 220	6/10	1	40	220	-	14
Stratos 40/1-8	6/10	1	220	SPS-I 30/8 180	10	1	G2	180	1xR08 / 2xRF12	14	Stratos 40/8 220	6/10	1	40	220	-	14
Stratos 40/1-10	6/10	1	220	SPS-I 30/12 180	10	1	G2	180	2xRF12 / 1xF26	14	Stratos 40/10 250	6/10	1	40	220	-	14
Stratos 40/1-12	6/10	1	250	SPS-I 30/12 180	10	1	G2	180	2xRF12 / 1xF26	14	Stratos 40/12 250	6/10	1	40	250	-	14
Stratos 40/1-16	6/10	1	250								Stratos 40/16 250	6/10	1	40	250	-	14
Top-D 40	6/10	3/1	220	HSP 25/6 180 SMO	6	1	G1½	180	2x RF09	9	Stratos Pico 25/6 180	6	1	G1½	180	2x RF09	9
Top-E 40/1-4	6/10	1	220	SPS-I 30/8 180	10	1	G2	180	1xR08 / 2xRF12		Stratos 40/4 220	6/10	1	40	220	-	
Top-E 40/1-10	6/10	1	250	SPS-I 30/12 180	10	1	G2	180	2xRF12 / 1xF26		Stratos 40/12 250	6/10	1	40	250	-	
Top-EV 40/1-5	6/10	1	250	SPS-I 40/8 220	10	1	40	220	1x F01		Stratos 40/4 220	6/10	1	40	220	1x F01	
Top-RL 40/4	6/10	1	250	SPS-I 40/8 220	10	1	40	220	1x F01		Stratos 40/4 220	6/10	1	40	220	1x F01	
Top-S 40/4	6/10	3/1	220	SPS-I 30/8 180	10	1	G2	180	1xR08 / 2xRF12	9	Stratos 40/4 220	6/10	1	40	220	-	9
Top-S 40/7	6/10	3/1	250	SPS-I 40/8 220	10	1	40	220	1x F01	9	Stratos 40/8 220	6/10	1	40	220	1x F01	9
Top-S 40/10	6/10	3	250	SPS-I 30/12 180	10	1	G2	180	2xRF12 / 1xF26	9	Stratos 40/12 250	6/10	1	40	250	-	9
Top-S 40/15	6/10	3	250								Stratos 40/16 250	6/10	1	40	250	-	9
Top-SV 40/4	6/10	3/1	250	SPS-I 40/8 220	10	1	40	220	1x F01	9	Stratos 40/4 220	6/10	1	40	220	1x F01	9
Yonos Maxo 40/0.5-4	6/10	1	220	SPS-I 40/8 220	10	1	40	220	-		Stratos 40/4 220	6/10	1	40	220	-	
Yonos Maxo 40/0.5-8	6/10	1	220	SPS-I 40/8 220	10	1	40	220	-		Stratos 40/8 220	6/10	1	40	220	-	
Yonos Maxo 40/0.5-12	6/10	1	250								Stratos 40/12 250	6/10	1	40	250	-	
Yonos Maxo 40/0.5-16	6/10	1	250								Stratos 40/16 250	6/10	1	40	250	-	
DN 50																	
D 50	6/10	3/1	240	SPS-I 30/12 180	10	1	G2	180	2xRF05 / 1xF03	9	Stratos 40/4 220	6/10	1	40	220	RA	9
E 50/1-7	6	1	240	SPS-I 30/12 180	10	1	G2	180	2xRF05 / 1xF03		Stratos 50/6 240	6/10	1	50	240	-	
H 50-2	6/10	3/1	280	SPS-I 30/12 180	10	1	G2	180	2xRF06 / 1xF04	9	Stratos 50/6 240	6/10	1	50	240	2x F03	9
P 50-1	6/10	3/1	280	SPS-I 30/12 180	10	1	G2	180	2xRF06 / 1xF04	9	Stratos 50/6 240	6/10	1	50	240	2x F03	9
P 50-2	6/10	3/1	280	SPS-I 30/12 180	10	1	G2	180	2xRF06 / 1xF04	9	Stratos 50/6 240	6/10	1	50	240	2x F03	9
P 50/125	6/10	3/1	280	SPS-I 30/12 180	10	1	G2	180	2xRF06 / 1xF04	9	Stratos 50/6 240	6/10	1	50	240	2x F03	9
P 50/125 r	6/10	3	280	SPS-I 30/12 180	10	1	G2	180	2xRF06 / 1xF04	9	Stratos 50/6 240	6/10	1	50	240	2x F03	9
P 50/125 v	6/10	3	280	SPS-I 30/12 180	10	1	G2	180	2xRF06 / 1xF04	9	Stratos 50/6 240	6/10	1	50	240	2x F03	9
P 50/140	6/10	3	340								Stratos 50/9 280	6/10	1	50	280	2x F04	9
P 50/160	6/10	3	340								Stratos 50/9 280	6/10	1	50	280	2x F04	9
P 50/160 r	6	3	340								Stratos 50/9 280	6/10	1	50	280	2x F04	9
P 50/160 v	6/10	3/1	340								Stratos 50/9 280	6/10	1	50	280	2x F04	9
P 50/200	10	3/1	460								Stratos 50/9 280	6/10	1	50	280	1xF03 / 1xF40	9
P 50/224	10	3	460								Stratos 50/9 280	6/10	1	50	280	1xF03 / 1xF40	9
P 50/250	6/10	3	460								Stratos 50/16 340	6/10	1	50	340	RA	9
P 50/250 r	10	3	440								Stratos 50/16 340	6/10	1	50	340	RA	9
P 50/250 v	6/10	3/1	440								Stratos 50/16 340	6/10	1	50	340	RA	9
RS 50	6/10	3/1	240								Stratos 50/6 240	6/10	1	50	240	-	9
S 50/80 r	6/10	3/1	240								Stratos 50/6 240	6/10	1	50	240	-	9
S 50/80 v	6/10	3/1	240								Stratos 50/6 240	6/10	1	50	240	-	9

Wilo				Hoval													
Type	PN	M	L	Type	PN	M	G/DN	L	AGS	Rem.	Type	PN	M	G/DN	L	AGS	Rem.
S 50/100	6/10	3	280								Stratos 50/9 280	6/10	1	50	280	-	9
S 50/100 r	6/10	3	280								Stratos 50/9 280	6/10	1	50	280	-	9
S 50/100 v	6/10	3	280								Stratos 50/9 280	6/10	1	50	280	-	9
S 50/125 r	6/10	3	280								Stratos 50/12 280	6/10	1	50	280	-	9
S 50/140 r	6/10	3	340								Stratos 50/16 340	6/10	1	50	340	-	9
Star-E 50/1-7	6/10	1	240	SPS-I 30/12 180	10	1	G2	180	2xRF05 / 1xF03		Stratos 50/6 240	6/10	1	50	240	-	
Stratos 50/1-6	6/10	1	240	SPS-I 30/12 180	10	1	G2	180	2xRF05 / 1xF03	14	Stratos 50/6 240	6/10	1	50	240	-	14
Stratos 50/1-8	6/10	1	240	SPS-I 30/12 180	10	1	G2	180	2xRF05 / 1xF03	14	Stratos 50/8 240	6/10	1	50	240	-	14
Stratos 50/1-9	6/10	1	280	SPS-I 30/12 180	10	1	G2	180	2xRF06 / 1xF04	14	Stratos 50/9 280	6/10	1	50	280	-	14
Stratos 50/1-10	6/10	1	240								Stratos 50/10 240	6/10	1	50	240	-	14
Stratos 50/1-12	6/10	1	280								Stratos 50/12 280	6/10	1	50	280	-	14
Stratos 50/1-16	6/10	1	340								Stratos 50/16 340	6/10	1	50	340	-	14
Top-D 50	6/10	3/1	240	SPS-I 30/12 180	10	1	G2	180	2xRF05 / 1xF03	9	Stratos 50/8 240	6/10	1	50	240	-	9
Top 50/7	6/10	3	280	SPS-I 30/12 180	10	1	G2	180	2xRF06 / 1xF04	9	Stratos 50/9 280	6/10	1	50	280	-	9
Top 50/10	6/10	3	280								Stratos 50/12 280	6/10	1	50	280	-	9
Top-E 50/1-6	6/10	1	240	SPS-I 30/12 180	10	1	G2	180	2xRF05 / 1xF03		Stratos 50/6 240	6/10	1	50	240	-	
Top-E 50/1-7	6/10	1	280	SPS-I 30/12 180	10	1	G2	180	2xRF06 / 1xF04		Stratos 50/9 280	6/10	1	50	280	-	
Top-E 50/1-10	6/10	1	280								Stratos 50/12 280	6/10	1	50	280	-	
Top-EV 50/1-6	6/10	1	280	SPS-I 30/12 180	10	1	G2	180	2xRF06 / 1xF04		Stratos 50/6 240	6/10	1	50	240	2x F03	
Top-S 50/4	6/10	3/1	240	SPS-I 30/12 180	10	1	G2	180	2xRF05 / 1xF03	9	Stratos 50/6 240	6/10	1	50	240	-	9
Top-S 50/7	6/10	3	280	SPS-I 30/12 180	10	1	G2	180	2xRF06 / 1xF04	9	Stratos 50/9 280	6/10	1	50	280	-	9
Top-S 50/10	6/10	3	280								Stratos 50/12 280	6/10	1	50	280	-	9
Top-S 50/15	6/10	3	340								Stratos 50/16 340	6/10	1	50	340	-	9
Top-SV 50/6	6/10	3/1	280								Stratos 50/6 240	6/10	1	50	240	2x F03	9
Yonos Maxo 50/0.5-8	6/10	1	240	SPS-I 30/12 180	10	1	G2	180	2xRF05 / 1xF03		Stratos 50/8 240	6/10	1	50	240	-	
Yonos Maxo 50/0.5-9	6/10	1	280	SPS-I 30/12 180	10	1	G2	180	2xRF06 / 1xF04		Stratos 50/9 280	6/10	1	50	280	-	
Yonos Maxo 50/0.5-12	6/10	1	280								Stratos 50/12 280	6/10	1	50	280	-	
Yonos Maxo 50/0.5-16	6/10	1	340								Stratos 50/16 340	6/10	1	50	340	-	
DN 65																	
D 65	6/10	3/1	280								Stratos 65/9 280	6/10	1	65	280	-	9
P 65-1	6/10	3/1	340								Stratos 65/9 280	6/10	1	65	280	2x F11	9
P 65-2	6/10	3/1	340								Stratos 65/9 280	6/10	1	65	280	2x F11	9
P 65/80 r	6	3	280								Stratos 65/9 280	6/10	1	65	280	-	9
P 65/110	6	3	340								Stratos 65/9 280	6/10	1	65	280	2x F11	9
P 65/125	6	3	340								Stratos 65/9 280	6/10	1	65	280	2x F11	9
P 65/125 r	6	3	340								Stratos 65/9 280	6/10	1	65	280	2x F11	9
P 65/125 v	6	3/1	340								Stratos 65/9 280	6/10	1	65	280	2x F11	9
P 65/140	6/10	3	340								Stratos 65/9 280	6/10	1	65	280	2x F11	9
P 65/160	6	3	340								Stratos 65/9 280	6/10	1	65	280	2x F11	9
P 65/160 r	6	3	340								Stratos 65/9 280	6/10	1	65	280	2x F11	9
P 65/160 v	6	3	340								Stratos 65/9 280	6/10	1	65	280	2x F11	9
P 65/200	10	3	500								Stratos 65/16 340	6/10	1	65	340	RA	9
P 65/250	10	3	500								Stratos 65/16 340	6/10	1	65	340	RA	9
P 65/250 r	10	3	475								Stratos 65/16 340	6/10	1	65	340	1x F41	9
P 65/250 v	10	3	500								Stratos 65/16 340	6/10	1	65	340	RA	9
RS 65	6/10	3/1	280								Stratos 65/9 280	6/10	1	65	280	-	9
S 65/80 r	6/10	3	280								Stratos 65/9 280	6/10	1	65	280	-	9
S 65/80 v	6/10	3	280								Stratos 65/9 280	6/10	1	65	280	-	9
S 65/110	6/10	3	340								Stratos 65/9 280	6/10	1	65	280	2x F11	9
S 65/125	6/10	3	340								Stratos 65/12 340	6/10	1	65	340	-	9
S 65/125 r	6/10	3	340								Stratos 65/12 340	6/10	1	65	340	-	9
S 65/125 v	6/10	3	340								Stratos 65/12 340	6/10	1	65	340	-	9
Stratos 65/1-6	6/10	1	280								Stratos 65/9 280	6/10	1	65	280	-	14
Stratos 65/1-9	6/10	1	280								Stratos 65/9 280	6/10	1	65	280	-	14
Stratos 65/1-12	6/10	1	340								Stratos 65/12 340	6/10	1	65	340	-	14
Stratos 65/1-16	6/10	1	340								Stratos 65/16 340	6/10	1	65	340	-	14
Top-D 65	6/10	3/1	280								Stratos 65/9 280	6/10	1	65	280	-	9
Top-E 65/1-10	6/10	1	340								Stratos 65/12 340	6/10	1	65	340	-	
Top-EV 65/1-10	6/10	1	400								Stratos 65/12 340	6/10	1	65	340	2x F11	
Top-S 65/7	6/10	3	280								Stratos 65/9 280	6/10	1	65	280	-	9
Top-S 65/10	6/10	3	340								Stratos 65/16 340	6/10	1	65	340	-	9
Top-S 65/13	6/10	3	340								Stratos 65/16 340	6/10	1	65	340	-	9
Top-S 65/15	6/10	3	340								Stratos 65/16 340	6/10	1	65	340	-	9
Yonos Maxo 65/0.5-9	6/10	1	280								Stratos 65/9 280	6/10	1	65	280	-	
Yonos Maxo 65/0.5-12	6/10	1	340								Stratos 65/12 340	6/10	1	65	340	-	
Yonos Maxo 65/0.5-16	6/10	1	340								Stratos 65/16 340	6/10	1	65	340	-	
DN 80																	
D 80	6/10	3/1	330	Stratos 80/12 360	6	1	PN6	360	RA	9							
H 80-1	6/10	3	360	Stratos 80/12 360	6	1	PN6	360	-	9	Stratos 80/12 360	10	1	PN10	360	-	9
H 80-2	6/10	3	330	Stratos 80/12 360	6	1	PN6	360	RA	9	Stratos 80/12 360	10	1	PN10	360	RA	9
P 80-1	6/10	3	360	Stratos 80/12 360	6	1	PN6	360	-	9	Stratos 80/12 360	10	1	PN10	360	-	9
P 80-2	6/10	3	360	Stratos 80/12 360	6	1	PN6	360	-	9	Stratos 80/12 360	10	1	PN10	360	-	9
P 80/125	6	3	360	Stratos 80/12 360	6	1	PN6	360	-	9							
P 80/125 r	6	3	360	Stratos 80/12 360	6	1	PN6	360	-	9							
P 80/125 v	6	3	360	Stratos 80/12 360	6	1	PN6	360	-	9							
P 80/160	6	3	360	Stratos 80/12 360	6	1	PN6	360	-	9							
P 80/160 r	6	3	360	Stratos 80/12 360	6	1	PN6	360	-	9							
P 80/160 v	6	3	360	Stratos 80/12 360	6	1	PN6	360	-	9							

Wilo				Hoval													
Type	PN	M	L	Type	PN	M	G/DN	L	AGS	Rem.	Type	PN	M	G/DN	L	AGS	Rem.
P 80/200	10	3	500	Stratos 80/12 360	6	1	PN6	360	1x F42	9							
P 80/224	10	3	500	Stratos 80/12 360	6	1	PN6	360	1x F42	9	Stratos 80/12 360	10	1	PN10	360	1x F42	9
P 80/250	10	3	500								Stratos 80/12 360	10	1	PN10	360	1x F42	9
P 80/250 r	10	3	500								Stratos 80/12 360	10	1	PN10	360	1x F42	9
P 80/250 v	10	3	500								Stratos 80/12 360	10	1	PN10	360	1x F42	9
S 80	6/10	3	360	Stratos 80/12 360	6	1	PN6	360	-	9	Stratos 80/12 360	10	1	PN10	360	-	9
S 80/100 v	6/10	3	330	Stratos 80/12 360	6	1	PN6	360	RA	9	Stratos 80/12 360	10	1	PN10	360	RA	9
S 80/125	6/10	3	360	Stratos 80/12 360	6	1	PN6	360	-	9	Stratos 80/12 360	10	1	PN10	360	-	9
S 80/125 r	6/10	3	360	Stratos 80/12 360	6	1	PN6	360	-	9	Stratos 80/12 360	10	1	PN10	360	-	9
S 80/125 v	6/10	3	360	Stratos 80/12 360	6	1	PN6	360	-	9	Stratos 80/12 360	10	1	PN10	360	-	9
Stratos 80/1-6	6	1	360	Stratos 80/12 360	6	1	PN6	360	-	14							
Stratos 80/1-6	10	1	360								Stratos 80/12 360	10	1	PN10	360	-	14
Stratos 80/1-12	6	1	360	Stratos 80/12 360	6	1	PN6	360	-	14							
Stratos 80/1-12	10	1	360								Stratos 80/12 360	10	1	PN10	360	-	14
Top-D 80	6	3/1	330	Stratos 80/12 360	6	1	PN6	360	RA	9							
Top-E 80/1-10	6	1	360	Stratos 80/12 360	6	1	PN6	360	-								
Top-S 80/7	6	3	360	Stratos 80/12 360	6	1	PN6	360	-	9							
Top-S 80/10	6	3	360	Stratos 80/12 360	6	1	PN6	360	-	9							
Top-S 80/20	6	3	360								VeroLine-IP-E 80/140-4/2	10	3	80	360	-	9
Yonos Maxo 80/0.5-6	6	1	280	Stratos 80/12 360	6	1	PN6	360	RA								
Yonos Maxo 80/0.5-6	10	1	280								Stratos 80/12 360	10	1	PN10	360	RA	
Yonos Maxo 80/0.5-12	6	1	340	Stratos 80/12 360	6	1	PN6	360	RA								
Yonos Maxo 80/0.5-12	10	1	340								Stratos 80/12 360	10	1	PN10	360	RA	
DN 100																	
D 100	6/10	3/1	380	Stratos 100/12 360	6	1	PN6	360	RA	9	Stratos 100/12 360	10	1	PN10	360	RA	9
P 100/160 r	6/10	3	395	Stratos 100/12 360	6	1	PN6	360	1x F34	9	Stratos 100/12 360	10	1	PN10	360	1x F34	9
P 100/160 v	6/10	3	395	Stratos 100/12 360	6	1	PN6	360	1x F34	9	Stratos 100/12 360	10	1	PN10	360	1x F34	9
P 100/180	6/10	3	500								VeroLine-IP-E 80/115-2,2/2	10	3	80	360	RA	9
P 100/200 r	10	3	550								Stratos 100/12 360	10	1	PN10	360	RA	9
P 100/200 v	10	3	500								Stratos 100/12 360	10	1	PN10	360	RA	9
P 100-1	6/10	3	395	Stratos 100/12 360	6	1	PN6	360	1x F34	9	Stratos 100/12 360	10	1	PN10	360	1x F34	9
P 100-2	6/10	3/1	395	Stratos 100/12 360	6	1	PN6	360	1x F34	9	Stratos 100/12 360	10	1	PN10	360	1x F34	9
S 100/125 r	6/10	3/1	395	Stratos 100/12 360	6	1	PN6	360	1x F34	9	Stratos 100/12 360	10	1	PN10	360	1x F34	9
S 100/125 v	6/10	3	395	Stratos 100/12 360	6	1	PN6	360	1x F34	9	Stratos 100/12 360	10	1	PN10	360	1x F34	9
Stratos 100/1-6	6	1	360	Stratos 100/12 360	6	1	PN6	360	-	14							
Stratos 100/1-6	10	1	360								Stratos 100/12 360	10	1	PN10	360	-	14
Stratos 100/1-12	6	1	360	Stratos 100/12 360	6	1	PN6	360	-	14							
Stratos 100/1-12	10	1	360								Stratos 100/12 360	10	1	PN10	360	-	14
Top-D 100	6/10	3/1	380	Stratos 100/12 360	6	1	PN6	360	RA	9	Stratos 100/12 360	10	1	PN10	360	RA	9
Top-E 100/1-10	6/10	1	360	Stratos 100/12 360	6	1	PN6	360	-		Stratos 100/12 360	10	1	PN10	360	-	
Top-S 100/10	3	3	360	Stratos 100/12 360	6	1	PN6	360	-	9	Stratos 100/12 360	10	1	PN10	360	-	9
Yonos Maxo 100/0.5-12	6	1	360	Stratos 100/12 360	6	1	PN6	360	-								
Yonos Maxo 100/0.5-12	10	1	360								Stratos 100/12 360	10	1	PN10	360	-	
DN 125																	
D 125	6	3	450	Stratos 100/12 360	6	1	PN6	360	RA	9	Stratos 100/12 360	10	1	PN10	360	RA	9
Top-D 125	6	3	450	Stratos 100/12 360	6	1	PN6	360	RA	9	Stratos 100/12 360	10	1	PN10	360	RA	9

Wilo				Hoval Highly efficient							Hoval Premium highly efficient						
Type	PN	M	L	Type	PN	M	G/DN	L	AGS	Rem.	Type	PN	M	G/DN	L	AGS	Rem.
Heating circulation double pumps																	
G 2 (Rp 1¼)																	
DORS 30/60 R	10	1	180								Stratos-D 32/8 220	6/10	1	32	220	RA	
DORS 30/70 R	10	1	180								Stratos-D 32/8 220	6/10	1	32	220	RA	
Star RSD 30/4	10	1	180								Stratos-D 32/8 220	6/10	1	32	220	RA	
Star RSD 30/6	10	1	180								Stratos-D 32/8 220	6/10	1	32	220	RA	
Top-SD 30/5	10	3/1	180								Stratos-D 32/8 220	6/10	1	32	220	RA	9
DN 32																	
DOP 32/80 v	6/10	3	220								Stratos-D 32/8 220	6/10	1	32	220	-	9
DOP 32/80 r	6/10	3	220								Stratos-D 32/8 220	6/10	1	32	220	-	9
DOS 32/80 v	6/10	3	220								Stratos-D 32/8 220	6/10	1	32	220	-	9
Stratos-D 32/1-8	6/10	1	220								Stratos-D 32/8 220	6/10	1	32	220	-	14
Stratos-D 32/1-12	6/10	1	220								Stratos-D 32/12 220	6/10	1	32	220	-	14
Top-ED 32/1-7	6/10	1	220								Stratos-D 32/8 220	6/10	1	32	220	-	14
Top-SD 32/7	6/10	3/1	220								Stratos-D 32/8 220	6/10	1	32	220	-	9
Top-SD 32/10	6/10	3/1	220								Stratos-D 32/12 220	6/10	1	32	220	-	9
DN 40																	
DOP 40/100 r	6/10	3	250								Stratos-D 40/8 220	6/10	1	40	220	1x F01	9
DOP 40/100 v	6/10	3	250								Stratos-D 40/8 220	6/10	1	40	220	1x F01	9
DOP 40/160 r	6/10	3	320								Stratos-D 40/8 220	6/10	1	40	220	2x F26	9
DOS 40/90 r	6/10	3	250								Stratos-D 40/8 220	6/10	1	40	220	1x F01	9
DOS 40/90 v	6/10	3	250								Stratos-D 40/8 220	6/10	1	40	220	1x F01	9
Stratos-D 40/1-8	6/10	1	220								Stratos-D 40/8 220	6/10	1	40	220	1x F01	14
Stratos-D 40/1-12	6/10	1	250								Stratos-D 40/12 250	6/10	1	40	250	-	14
Stratos-D 40/1-16	6/10	1	250								Stratos-D 40/16 250	6/10	1	40	250	-	14
Top-ED 40/1-7	6/10	1	250								Stratos-D 40/8 220	6/10	1	40	220	1x F01	
Top-ED 40/1-10	6/10	3	250								Stratos-D 40/12 250	6/10	1	40	250	-	9
Top-SD 40/3	6/10	3/1	250								Stratos-D 40/8 220	6/10	1	40	220	1x F01	9
Top-SD 40/7	6/10	3/1	250								Stratos-D 40/8 220	6/10	1	40	220	1x F01	9
Top-SD 40/10	6/10	3	250								Stratos-D 40/12 250	6/10	1	40	250	-	9
Top-SD 40/15	6/10	3	250								Stratos-D 40/16 250	6/10	1	40	250	-	9
DN 50																	
DOP 50/100 r	6	3	280								Stratos-D 50/8 240	6/10	1	50	240	2x F03	9
DOP 50/100 v	6	3	280								Stratos-D 50/8 240	6/10	1	50	240	2x F03	9
DOP 50/160 r	6	3	340								Stratos-D 50/12 280	6/10	1	50	280	2x F04	9
DOS 50/100 r	6/10	3	280								Stratos-D 50/12 280	6/10	1	50	280	-	9
DOS 50/100 v	6/10	3	280								Stratos-D 50/12 280	6/10	1	50	280	-	9
DOS 50/125 r	6/10	3	280								Stratos-D 50/12 280	6/10	1	50	280	-	9
DOS 50/140 r	6/10	3	340								Stratos-D 50/16 340	6/10	1	50	340	-	9
Stratos-D 50/1-8	6/10	1	240								Stratos-D 50/8 240	6/10	1	50	240	-	14
Stratos-D 50/1-9	6/10	1	280								Stratos-D 50/12 280	6/10	1	50	280	-	14
Stratos-D 50/1-12	6/10	1	280								Stratos-D 50/12 280	6/10	1	50	280	-	14
Stratos-D 50/1-16	6/10	1	340								Stratos-D 50/16 340	6/10	1	50	340	-	14
Top-ED 50/1-6	6/10	1	280								Stratos-D 50/8 240	6/10	1	50	240	2x F03	
Top-ED 50/1-7	6/10	1	280								Stratos-D 50/8 240	6/10	1	50	240	2x F03	
Top-ED 50/1-10	6/10	1	280								Stratos-D 50/12 280	6/10	1	50	280	-	
Top-SD 50/7	6/10	3	280								Stratos-D 50/8 240	6/10	1	50	240	2x F03	9
Top-SD 50/10	6/10	3	280								Stratos-D 50/12 280	6/10	1	50	280	-	9
Top-SD 50/15	6/10	3	340								Stratos-D 50/16 340	6/10	1	50	340	-	9
DN 65																	
DOP 65/125 r	6/10	3	340								Stratos-D 65/12 340	6/10	1	65	340	-	9
DOP 65/125 v	6/10	3	340								Stratos-D 65/12 340	6/10	1	65	340	-	9
DOP 65/160 r	6/10	3	340								Stratos-D 65/16 340	6/10	1	65	340	-	9
DOS 65/125 r	6/10	3	340								Stratos-D 65/12 340	6/10	1	65	340	-	9
DOS 65/125 v	6/10	3	340								Stratos-D 65/12 340	6/10	1	65	340	-	9
Stratos-D 65/1-12	6/10	1	340								Stratos-D 65/12 340	6/10	1	65	340	-	14
Stratos-D 65/1-16	6/10	1	340								Stratos-D 65/16 340	6/10	1	65	340	-	14
Top-ED 65/1-10	6/10	1	340								Stratos-D 65/12 340	6/10	1	65	340	-	
Top-SD 65/10	6/10	3	340								Stratos-D 65/12 340	6/10	1	65	340	-	9
Top-SD 65/13	6/10	3	340								Stratos-D 65/16 340	6/10	1	65	340	-	9
Top-SD 65/15	6/10	3	340								Stratos-D 65/16 340	6/10	1	65	340	-	9
DN 80																	
DOP 65/125 r	6/10	3	360	Stratos-D 80/12 360	6	1	80	360	-	9	Stratos-D 80/12 360	10	1	80	360	-	9
DOP 80/125 v	6/10	3	360	Stratos-D 80/12 360	6	1	80	360	-	9	Stratos-D 80/12 360	10	1	80	360	-	9
DOP 80/160 r	6/10	3	360	Stratos-D 80/12 360	6	1	80	360	-	9	Stratos-D 80/12 360	10	1	80	360	-	9
DOS 80/125 v	6/10	3	360	Stratos-D 80/12 360	6	1	80	360	-	9	Stratos-D 80/12 360	10	1	80	360	-	9
DOS 80/125 r	6/10	3	360	Stratos-D 80/12 360	6	1	80	360	-	9	Stratos-D 80/12 360	10	1	80	360	-	9
Stratos-D 80/1-12	6	1	360	Stratos-D 80/12 360	6	1	80	360	-	14							
Stratos-D 80/1-12	10	1	360								Stratos-D 80/12 360	10	1	80	360	-	14
Top-ED 80/1-10	6/10	1	360	Stratos-D 80/12 360	6	1	80	360	-		Stratos-D 80/12 360	10	1	80	360	-	
Top-SD 80/10	6/10	3	360	Stratos-D 80/12 360	6	1	80	360	-	9	Stratos-D 80/12 360	10	1	80	360	-	9
DN 100																	
DOP 100/160 r	6/10	3	395	Stratos-D 80/12 360	6	1	80	360	RA	9	Stratos-D 80/12 360	10	1	80	360	RA	9
DOS 100/125 r	6/10	3	395	Stratos-D 80/12 360	6	1	80	360	RA	9	Stratos-D 80/12 360	10	1	80	360	RA	9

Wilo				Hoval Highly efficient							Hoval Premium highly efficient						
Type	PN	M	L	Type	PN	M	G/DN	L	AGS	Rem.	Type	PN	M	G/DN	L	AGS	Rem.
Circulating pumps domestic hot water																	
Rp ½																	
Star-Z 15	10	1	84	SPS-Z 15/7 130 SMO	10	1	G1	130	RA		Motor Star-Z Nova 15	-	1	-	-	-	
Z 15	10	1	84	SPS-Z 15/7 130 SMO	10	1	G1	130	RA		Star-Z Nova 15	10	1	Rp½	84	-	
G 1 (Rp ½)																	
Star-Z 15 A	10	1	138	SPS-Z 15/7 130 SMO	10	1	G1	130	RA		Motor Star-Z Nova 15	-	1	-	-	-	
Star-Z 15 A Press	10	1	166	SPS-Z 15/7 130 SMO	10	1	G1	130	RA		Motor Star-Z Nova 15	-	1	-	-	-	
Star-Z 15 C	10	1	138	SPS-Z 15/7 130 SMO	10	1	G1	130	RA		Motor Star-Z Nova 15	-	1	-	-	-	
Star-Z 15 C Press	10	1	166	SPS-Z 15/7 130 SMO	10	1	G1	130	RA		Motor Star-Z Nova 15	-	1	-	-	-	
Star-Z 15 TT	10	1	138	Star-Z 15 TT	10	1	G1	138			Motor Star-Z 15 TT	-	1	-	-	-	
Star-Z 15 TT Press	10	1	166	SPS-Z 15/7 130 SMO	10	1	G1	130	RA		Motor Star-Z 15 TT	-	1	-	-	-	
Star-Z 20/1	10	1	140	SPS-Z 15/7 130 SMO	10	1	G1	130	RA								
Z 20	10	1	140	SPS-Z 15/7 130 SMO	10	1	G1	130	RA								
Z 20/40	10	1	140	SPS-Z 15/7 130 SMO	10	1	G1	130	RA								
G 1¼ (Rp ¾)																	
Star-Z 20/4-3	10	1	150	SPS-Z 20/7 150 SMO	10	1	G1¼	150	-								
Star-Z 20/5-3	10	1	150	SPS-Z 20/7 150 SMO	10	1	G1¼	150	-								
Stratos Pico-Z 20/1-4 150	10	1	150	SPS-Z 20/7 150 SMO	10	1	G1¼	150	-		Stratos Pico-Z 25/6 180	10	1	G1½	180	RA	
Stratos Pico-Z 20/1-6 150	10	1	150	SPS-Z 20/7 150 SMO	10	1	G1¼	150	-		Stratos Pico-Z 25/6 180	10	1	G1½	180	RA	
Top-Z 20/4	10	1	150	SPS-Z 20/7 150 SMO	10	1	G1¼	150	-								
ZP 20-1	10	1	140	SPS-Z 20/7 150 SMO	10	1	G1¼	150	RA								
ZP 20-2	10	1	140	SPS-Z 20/7 150 SMO	10	1	G1¼	150	RA								
ZS 20-1	10	1	140	SPS-Z 20/7 150 SMO	10	1	G1¼	150	RA								
ZS 20-2	10	1	140	SPS-Z 20/7 150 SMO	10	1	G1¼	150	RA								
G 1½ (Rp 1)																	
IL-Z 25/2	10	3/1	180	SPS-Z 25/7 180 SMO	10	1	G1½	180	-	9	Stratos Pico-Z 25/6 180	10	1	G1½	180	-	9
IL-Z 25/6	10	3/1	180	SPS-Z 25/7 180 SMO	10	1	G1½	180	-	9	Stratos Pico-Z 25/6 180	10	1	G1½	180	-	9
IP-Z 25/2	10	3/1	180	SPS-Z 25/7 180 SMO	10	1	G1½	180	-	9	Stratos Pico-Z 25/6 180	10	1	G1½	180	-	9
IP-Z 25/6	10	3/1	180	SPS-Z 25/7 180 SMO	10	1	G1½	180	-	9	Stratos Pico-Z 25/6 180	10	1	G1½	180	-	9
Star-Z 25/2	10	3/1	180	SPS-Z 25/7 180 SMO	10	1	G1½	180	-	9	Stratos Pico-Z 25/6 180	10	1	G1½	180	-	9
Star-Z 25/6	10	1	180	SPS-Z 25/7 180 SMO	10	1	G1½	180	-		Stratos Pico-Z 25/6 180	10	1	G1½	180	-	
Star-ZE 25/1-5	10	1	180	SPS-Z 25/7 180 SMO	10	1	G1½	180	-		Stratos Pico-Z 25/6 180	10	1	G1½	180	-	
Star-ZE 25/1-5 SSM	10	1	180	SPS-Z 25/7 180 SMO	10	1	G1½	180	-		Stratos Pico-Z 25/6 180	10	1	G1½	180	-	
Stratos Eco-Z 25/1-5	10	1	180	SPS-Z 25/7 180 SMO	10	1	G1½	180	-		Stratos Pico-Z 25/6 180	10	1	G1½	180	-	
Stratos-Z 25/1-8	10	1	180	Top-Z 30/10 180	10	1	G2	180	RA		Stratos-Z 30/8 180	10	1	G2	180	RA	14
Top-Z 25/6	10	3/1	180	Top-Z 25/6	10	1	G1½	180	-	9	Stratos-Z 30/8 180	10	1	G2	180	RA	9
Top-Z 25/10	10	3/1	180	Top-Z 30/10 180	10	1	G2	180	RA	9	Stratos-Z 30/12 180	10	1	G2	180	RA	9
Top-ZV 25/7	10	3/1	180	SPS-Z 25/7 180 SMO	10	1	G1½	180	-	9	Stratos-Z 30/8 180	10	1	G2	180	RA	9
Z 25	10	3/1	180	SPS-Z 25/7 180 SMO	10	1	G1½	180	-	9							9
Z 25/2	10	3/1	180	SPS-Z 25/7 180 SMO	10	1	G1½	180	-	9	Stratos Pico-Z 25/6 180	10	1	G1½	180	-	9
Z 25/6	10	3/1	180	SPS-Z 25/7 180 SMO	10	1	G1½	180	-	9	Stratos Pico-Z 25/6 180	10	1	G1½	180	-	9
ZP 25	10	3/1	180	SPS-Z 25/7 180 SMO	10	1	G1½	180	-	9							9
ZP 25-1	10	3/1	180	SPS-Z 25/7 180 SMO	10	1	G1½	180	-	9							9
ZP 25-2	10	3/1	180	SPS-Z 25/7 180 SMO	10	1	G1½	180	-	9							9
ZS 25	10	3/1	180	SPS-Z 25/7 180 SMO	10	1	G1½	180	-	9	Stratos Pico-Z 25/6 180	10	1	G1½	180	-	9
G 2 (Rp 1¼)																	
Stratos-Z 30/1-8	10	1	180	Top-Z 30/10 180	10	1	G2	180	-		Stratos-Z 30/8 180	10	1	G2	180	-	14
Stratos-Z 30/1-12	10	1	180								Stratos-Z 30/12 180	10	1	G2	180	-	14
Top-Z 30	10	3/1	180	Top-Z 30/10 180	10	1	G2	180	-	9	Stratos-Z 30/8 180	10	1	G2	180	-	9
Top-Z 30/7	10	3/1	180	Top-Z 30/10 180	10	1	G2	180	-	9	Stratos-Z 30/8 180	10	1	G2	180	-	9
Top-Z 30/10	10	3/1	180	Top-Z 30/10 180	10	1	G2	180	-	9	Stratos-Z 30/12 180	10	1	G2	180	-	9
Top-ZV 30/7	10	3/1	180	Top-Z 30/10 180	10	1	G2	180	-	9	Stratos-Z 30/8 180	10	1	G2	180	-	9
Z 30	10	3/1	220	Top-Z 30/10 180	10	1	G2	180	1x R14	9	Stratos-Z 30/8 180	10	1	G2	180	1x R14	9
Z 30 (all years of manufact.)	10	3/1	180	Top-Z 30/10 180	10	1	G2	180	-	9	Stratos-Z 30/8 180	10	1	G2	180	-	9
ZP 30	10	3/1	220	Top-Z 30/10 180	10	1	G2	180	1x R14	9	Stratos-Z 30/8 180	10	1	G2	180	1x R14	9
ZS 30	10	3/1	220	Top-Z 30/10 180	10	1	G2	180	1x R14	9	Stratos-Z 30/8 180	10	1	G2	180	1x R14	9
DN 40																	
Stratos-Z 40/1-8	6/10	1	220								Stratos-Z 40/8 220	6/10	1	40	220	-	14
Stratos-Z 40/1-12	6/10	1	250								Stratos-Z 40/12 250	6/10	1	40	250	-	14
Top-Z 40	6/10	3/1	250	Top-Z 40/7 250	10	1	40	250	-	9	Stratos-Z 40/8 220	6/10	1	40	220	1x F01-MS	9
Top-Z 40/7	6/10	3/1	250	Top-Z 40/7 250	10	1	40	250	-	9	Stratos-Z 40/8 220	6/10	1	40	220	1x F01-MS	9
Top-ZV 40/4	6/10	3/1	250								Stratos-Z 40/8 220	6/10	1	40	220	1x F01-MS	9
Z 40	6/10	3/1	250	Top-Z 40/7 250	10	1	40	250	-	9							
Z 40 r	6/10	3/1	250	Top-Z 40/7 250	10	1	40	250	-	9							
Z 40 v	6/10	3/1	250	Top-Z 40/7 250	10	1	40	250	-	9							
ZP 40	6/10	3/1	250														
DN 50																	
Stratos-Z 50/1-9	6/10	1	280														
Top-Z 50	6/10	3	280	Top-Z 50/7 280	10	3	50	280	-	9							
Top-Z 50/7	6/10	3	280	Top-Z 50/7 280	10	3	50	280	-	9							
Top-ZV 50/6	6/10	3	280														
Z 50 r	6/10	3	280	Top-Z 50/7 280	10	3	50	280	-	9							
Z 50 v	6/10	3	280	Top-Z 50/7 280	10	3	50	280	-	9							
ZH 50	6/10	3	280	Top-Z 50/7 280	10	3	50	280	-	9							
ZP 50	6/10	1	280	Top-Z 50/7 280	10	3	50	280	-	9							
ZS 50	6/10	3	280	Top-Z 50/7 280	10	3	50	280	-	9							

Wilo				Hoval Highly efficient							Hoval Premium highly efficient						
Type	PN	M	L	Type	PN	M	G/DN	L	AGS	Rem.	Type	PN	M	G/DN	L	AGS	Rem.
DN 65																	
Stratos-Z 65/1-12	6/10	1	340														
Top-Z 65	6/10	3	340	Top-Z 65/10 340	10	3	65	340	-	9							
Top-Z 65/10	6/10	3	340	Top-Z 65/10 340	10	3	65	340	-	9							
Top-ZV 65/10	6/10	3	400	Top-Z 65/10 340	10	3	65	340	2x F11	9							
Z 65 r	6/10	3	340	Top-Z 65/10 340	10	3	65	340	-	9							
Z 65 v	6/10	3	340	Top-Z 65/10 340	10	3	65	340	-	9							
ZH 65	6/10	1	340	Top-Z 65/10 340	10	3	65	340	-	9							
ZP 65	6/10	3	340	Top-Z 65/10 340	10	3	65	340	-	9							
ZS 65	6/10	3	340	Top-Z 65/10 340	10	3	65	340	-	9							
DN 80																	
Top-Z 80	6	3	360	Top-Z 65/10 340	10	3	65	340	RA	9							
Top-Z 80	10	3	360	Top-Z 65/10 340	10	3	65	340	RA	9							
Top-Z 80/10	6	3	360	Top-Z 65/10 340	10	3	65	340	RA	9							
Top-Z 80/10	10	3	360	Top-Z 65/10 340	10	3	65	340	RA	9							
Z 80 v	6/10	3	360	Top-Z 65/10 340	10	3	65	340	RA	9							
ZH 80	6/10	3	360	Top-Z 65/10 340	10	3	65	340	RA	9							
ZP 80	6/10	3	360	Top-Z 65/10 340	10	3	65	340	RA	9							
ZS 80	6/10	3	360	Top-Z 65/10 340	10	3	65	340	RA	9							

KSB				Hoval													
Type	PN	M	L	Type	PN	M	G/DN	L	AGS	Rem.	Type	PN	M	G/DN	L	AGS	Rem.
Heating circulating pumps																	
G 1 (Rp ½)																	
C 02/40 Rio	10	1	130	HSP 15/4 130 SMO	6	1	G1	130	-		Stratos Pico 15/4 130	6	1	G1	130	-	
C 02/60 Rio	10	1	130	HSP 15/6 130 SMO	6	1	G1	130	-		Stratos Pico 15/6 130	6	1	G1	130	-	
C 15-15 130 Rio	10	1	130	HSP 15/4 130 SMO	6	1	G1	130	-		Stratos Pico 15/4 130	6	1	G1	130	-	
C 15-40 130 Rio	10	1	130	HSP 15/4 130 SMO	6	1	G1	130	-		Stratos Pico 15/4 130	6	1	G1	130	-	
C 15-60 130 Rio	10	1	130	HSP 15/6 130 SMO	6	1	G1	130	-		Stratos Pico 15/6 130	6	1	G1	130	-	
Calio S 15-40 130	10	1	130	HSP 15/4 130 SMO	6	1	G1	130	-		Stratos Pico 15/4 130	6	1	G1	130	-	
Calio S 15-60 130	10	1	130	HSP 15/6 130 SMO	6	1	G1	130	-		Stratos Pico 15/6 130	6	1	G1	130	-	
G 1¼ (Rp ¾)																	
C 12/40 Rio	10	1	130	HSP 15/4 130 SMO	6	1	G1	130	RA		Stratos Pico 15/4 130	10	1	G1	130	RA	
C 12/60 Rio	10	1	130	HSP 15/6 130 SMO	6	1	G1	130	RA		Stratos Pico 15/6 130	10	1	G1	130	RA	
G 1½ (Rp 1)																	
22-2 E 13 Riovar	10	1	130	HSP 15/4 130 SMO	6	1	G1	130	1x PAS12		Stratos Pico 25/4 130	6	1	G1½	130	-	
22-2 E 16 Riovar	10	1	160	HSP 15/4 130 SMO	6	1	G1	130	1xPAS12 / 1xR01		Stratos Pico 25/4 130	6	1	G1½	130	1x R01	
22-2 E Riovar	10	1	180	HSP 25/4 180 SMO	6	1	G1½	180	-		Stratos Pico 25/4 180	6	1	G1½	180	-	
22-3 E 13 Riovar	10	1	130	HSP 15/4 130 SMO	6	1	G1	130	1x PAS12		Stratos Pico 25/4 130	6	1	G1½	130	-	
22-3 E Riovar	10	1	180	HSP 25/4 180 SMO	6	1	G1½	180	-		Stratos Pico 25/4 180	6	1	G1½	180	-	
22-4 E 13 Riovar	10	1	130	HSP 15/6 130 SMO	6	1	G1	130	1x PAS12		Stratos Pico 25/6 130	6	1	G1½	130	-	
22-4 E 16 Riovar	10	1	160	HSP 15/6 130 SMO	6	1	G1	130	1xPAS12 / 1xR01		Stratos Pico 25/6 130	6	1	G1½	130	1x R01	
22-4 E Riovar	10	1	180	HSP 25/4 180 SMO	6	1	G1½	180	-		Stratos Pico 25/4 180	6	1	G1½	180	-	
22-5 E 13 Riovar	10	1	130	HSP 15/6 130 SMO	6	1	G1	130	1x PAS12		Stratos Pico 25/6 130	6	1	G1½	130	-	
22-5 E Riovar	10	1	180	HSP 25/4 180 SMO	6	1	G1½	180	-		Stratos Pico 25/4 180	6	1	G1½	180	-	
22-6 E/D Riovar	10	3/1	180	SPS-I 25/8 180	10	1	G1½	180	-	9	Stratos 25/6 180	10	1	G1½	180	-	9
22-7 E/D Riovar	10	3/1	180	SPS-I 25/8 180	10	1	G1½	180	-	9	Stratos 25/8 180	10	1	G1½	180	-	9
24-2 D Riovar	10	3	180	HSP 25/4 180 SMO	6	1	G1½	180	-	9	Stratos Pico 25/4 180	6	1	G1½	180	-	9
24-2 E Riovar	10	1	180	HSP 25/4 180 SMO	6	1	G1½	180	-		Stratos Pico 25/4 180	6	1	G1½	180	-	
24-8 D Riovar	10	3	180	HSP 25/6 180 SMO	6	1	G1½	180	-	9	Stratos Pico 25/6 180	6	1	G1½	180	-	9
24-8 E Riovar	10	1	180	HSP 25/6 180 SMO	6	1	G1½	180	-		Stratos Pico 25/6 180	6	1	G1½	180	-	
25-100 E/D Rio	10	3/1	180	SPS-I 25/8 180	10	1	G1½	180	-	9	Stratos 25/12 180	10	1	G1½	180	-	9
25-40 Riotronic	10	1	180	HSP 25/4 180 SMO	6	1	G1½	180	-		Stratos Pico 25/4 180	6	1	G1½	180	-	
25-50 Rio	10	1	180	HSP 25/6 180 SMO	6	1	G1½	180	-		Stratos Pico 25/6 180	6	1	G1½	180	-	
25-60 B Riotronic	10	1	180								Stratos Pico 25/6 180	6	1	G1½	180	-	
25-60 Rio-Eco	10	1	180								Stratos 25/6 180	10	1	G1½	180	-	
25-60 Riotronic	10	1	180	HSP 25/6 180 SMO	6	1	G1½	180	-		Stratos Pico 25/6 180	6	1	G1½	180	-	
25-7 E/D Rio	10	3/1	180	SPS-I 25/8 180	10	1	G1½	180	-	9	Stratos 25/8 180	10	1	G1½	180	-	9
25-70 E/D Rio	10	3/1	180	SPS-I 25/8 180	10	1	G1½	180	-	9	Stratos 25/8 180	10	1	G1½	180	-	9
25-80 Rio-Eco	10	1	180								Stratos 25/8 180	10	1	G1½	180	-	
A 2 R Riomatic	10	3/1	180	SPS-I 25/8 180	10	1	G1½	180	-	9	Stratos 25/8 180	10	1	G1½	180	-	9
A 2 V Riomatic	10	3/1	180	SPS-I 25/8 180	10	1	G1½	180	-	9	Stratos 25/8 180	10	1	G1½	180	-	9
B 2 R Riomatic	10	1	180	HSP 25/6 180 SMO	6	1	G1½	180	-		Stratos Pico 25/6 180	6	1	G1½	180	-	
B 2 V Riomatic	10	1	180	HSP 25/6 180 SMO	6	1	G1½	180	-		Stratos Pico 25/6 180	6	1	G1½	180	-	
C 2 V Riomatic	10	1	180	HSP 25/4 180 SMO	6	1	G1½	180	-		Stratos Pico 25/4 180	6	1	G1½	180	-	
C 22/20 Riomatic	10	1	180	HSP 25/4 180 SMO	6	1	G1½	180	-		Stratos Pico 25/4 180	6	1	G1½	180	-	
C 22/25 Rio	10	1	180	HSP 25/4 180 SMO	6	1	G1½	180	-		Stratos Pico 25/4 180	6	1	G1½	180	-	
C 22/35 Riomatic	10	1	180	HSP 25/6 180 SMO	6	1	G1½	180	-		Stratos Pico 25/6 180	6	1	G1½	180	-	
C 22/40 Rio	10	1	180	HSP 25/4 180 SMO	6	1	G1½	180	-		Stratos Pico 25/4 180	6	1	G1½	180	-	
C 22/40-130 Rio	10	1	130	HSP 15/4 130 SMO	6	1	G1	130	1x PAS12		Stratos Pico 25/4 130	6	1	G1½	130	-	
C 22/50 Rio	10	1	180	HSP 25/6 180 SMO	6	1	G1½	180	-		Stratos Pico 25/6 180	6	1	G1½	180	-	
C 22/60 Rio	10	1	180	HSP 25/6 180 SMO	6	1	G1½	180	-		Stratos Pico 25/6 180	6	1	G1½	180	-	
C 25-15 Rio	10	1	180	HSP 25/4 180 SMO	6	1	G1½	180	-		Stratos Pico 25/4 180	6	1	G1½	180	-	
C 25-25 Rio	10	1	180	HSP 25/4 180 SMO	6	1	G1½	180	-		Stratos Pico 25/4 180	6	1	G1½	180	-	
C 25-40 130 Rio	10	1	130	HSP 15/4 130 SMO	6	1	G1	130	1x PAS12		Stratos Pico 25/4 130	6	1	G1½	130	-	
C 25-40 Rio	10	1	180	HSP 25/4 180 SMO	6	1	G1½	180	-		Stratos Pico 25/4 180	6	1	G1½	180	-	
C 25-50 Rio	10	1	180	HSP 25/4180 SMO	6	1	G1½	180	-		Stratos Pico 25/4 180	6	1	G1½	180	-	
C 25-50-130 Rio	10	1	130	HSP 15/4 130 SMO	6	1	G1	130	1x PAS12		Stratos Pico 25/4 130	6	1	G1½	130	-	
C 25-60 130 Rio	10	1	130	HSP 15/6 130 SMO	6	1	G1	130	1x PAS12		Stratos Pico 25/6 130	6	1	G1½	130	-	
C 25-60 Rio	10	1	180	HSP 25/6 180 SMO	6	1	G1½	180	-		Stratos Pico 25/6 180	6	1	G1½	180	-	
Calio S 25-40	10	1	180	HSP 25/4 180 SMO	6	1	G1½	180	-		Stratos Pico 25/4 180	6	1	G1½	180	-	
Calio S 25-40 130	10	1	130	HSP 15/4 130 SMO	6	1	G1	130	1x PAS12		Stratos Pico 25/4 130	6	1	G1½	130	-	
Calio S 25-60	10	1	180	HSP 25/6 180 SMO	6	1	G1½	180	-		Stratos Pico 25/6 180	6	1	G1½	180	-	
Calio S 25-60 130	10	1	130	HSP 15/6 130 SMO	6	1	G1	130	1x PAS12		Stratos Pico 25/6 130	6	1	G1½	130	-	
Calio S 25-60 BMS	10	1	180	HSP 25/6 180 SMO	6	1	G1½	180	-		Stratos Pico 25/6 180	6	1	G1½	180	-	
E 25/1-5 Riotron	10	1	180	HSP 25/6 180 SMO	6	1	G1½	180	-		Stratos Pico 25/6 180	6	1	G1½	180	-	
S 25-40 Riotronic	10	1	180	HSP 25/4 180 SMO	6	1	G1½	180	-		Stratos Pico 25/4 180	6	1	G1½	180	-	
S 25-60 Riotronic	10	1	180	HSP 25/6 180 SMO	6	1	G1½	180	-		Stratos Pico 25/6 180	6	1	G1½	180	-	
G 2 (Rp 1¼)																	
30-10 E/D Rio	10	3/1	180	SPS-I 30/12 180	10	1	G2	180	-	9	Stratos 30/12 180	10	1	G2	180	-	9
30-100 Rio	10	3/1	180	SPS-I 30/12 180	10	1	G2	180	-	9	Stratos 30/12 180	10	1	G2	180	-	9
30-100 Riotec	10	1	180	SPS-I 30/12 180	10	1	G2	180	-		Stratos 30/12 180	10	1	G2	180	-	
30-120 Rio-Eco	10	1	180	SPS-I 30/12 180	10	1	G2	180	-		Stratos 30/12 180	10	1	G2	180	-	
30-40 Rio	10	1	180	SPS-I 30/8 180	10	1	G2	180	-		Stratos 30/6 180	10	1	G2	180	-	
30-40 Riotronic	10	1	180	HSP 30/4 180 SMO	6	1	G2	180	-		Stratos Pico 30/4 180	6	1	G2	180	-	
30-50 Rio	10	1	180	SPS-I 30/8 180	10	1	G2	180	-		Stratos 30/6 180	10	1	G2	180	-	
30-60 Rio-Eco	10	1	180	SPS-I 30/8 180	10	1	G2	180	-		Stratos 30/6 180	10	1	G2	180	-	
30-60 Riotronic	10	1	180	HSP 30/6 180 SMO	6	1	G2	180	-		Stratos Pico 30/6 180	6	1	G2	180	-	
30-60 Riotronic SSM	10	1	180	HSP 30/6 180 SMO	6	1	G2	180	-		Stratos Pico 30/6 180	10	1	G2	180	-	
30-7 E/D Rio	10	3/1	180	SPS-I 30/8 180	10	1	G2	180	-	9	Stratos 30/8 180	10	1	G2	180	-	9

KSB				Hoval													
Type	PN	M	L	Type	PN	M	G/DN	L	AGS	Rem.	Type	PN	M	G/DN	L	AGS	Rem.
30-70 E/D Rio	10	3/1	180	SPS-I 30/8 180	10	1	G2	180	-	9	Stratos 30/8 180	10	1	G2	180	-	9
30-70 Riotec	10	1	180	SPS-I 30/8 180	10	1	G2	180	-		Stratos 30/8 180	10	1	G2	180	-	
30-80 Rio-Eco	10	1	180	SPS-I 30/8 180	10	1	G2	180	-		Stratos 30/8 180	10	1	G2	180	-	
31-4 E Riovar	10	1	180	HSP 30/4 180 SMO	6	1	G2	180	-		Stratos Pico 30/4 180	6	1	G2	180	-	
32-1 E Riovar	10	1	180	HSP 30/4 180 SMO	6	1	G2	180	-		Stratos Pico 30/4 180	6	1	G2	180	-	
32-12 E/D Riovar	10	3/1	180	SPS-I 30/8 180	10	1	G2	180	-	9	Stratos 30/8 180	10	1	G2	180	-	9
32-15 E/D Riovar	10	3/1	180	SPS-I 30/8 180	10	1	G2	180	-	9	Stratos 30/8 180	10	1	G2	180	-	9
32-17 E/D Riovar	10	3/1	180	SPS-I 30/12 180	10	1	G2	180	-	9	Stratos 30/12 180	10	1	G2	180	-	9
32-2 E Riovar	10	1	180	HSP 30/4 180 SMO	6	1	G2	180	-		Stratos Pico 30/4 180	6	1	G2	180	-	
32-3 E Riovar	10	1	180	HSP 30/4 180 SMO	6	1	G2	180	-		Stratos Pico 30/4 180	6	1	G2	180	-	
32-4 E Riovar	10	1	180	HSP 30/6 180 SMO	6	1	G2	180	-		Stratos Pico 30/6 180	6	1	G2	180	-	
32-5 E Riovar	10	1	180	HSP 30/6 180 SMO	6	1	G2	180	-		Stratos Pico 30/6 180	6	1	G2	180	-	
32-6 E/D Riovar	10	3/1	180	SPS-I 30/8 180	10	1	G2	180	-	9	Stratos 30/6 180	10	1	G2	180	-	9
32-60 Rio-Eco	10	1	180	SPS-I 30/8 180	10	1	G2	180	-		Stratos 30/6 180	10	1	G2	180	-	
32-7 E/D Riovar	10	3/1	180	SPS-I 30/8 180	10	1	G2	180	-	9	Stratos 30/8 180	10	1	G2	180	-	9
34-2 E/D Riovar	10	3/1	180	HSP 30/4 180 SMO	6	1	G2	180	-	9	Stratos Pico 30/4 180	6	1	G2	180	-	9
34-8 E/D Riovar	10	3/1	180	SPS-I 30/8 180	10	1	G2	180	-	9	Stratos 30/6 180	10	1	G2	180	-	9
A 3 V Riomatic	10	3/1	180	SPS-I 30/8 180	10	1	G2	180	-	9	Stratos 30/8 180	10	1	G2	180	-	9
B 3 V Riomatic	10	1	180	HSP 30/6 180 SMO	6	1	G2	180	-		Stratos Pico 30/6 180	6	1	G2	180	-	
C 3 V Riomatic	10	1	180	HSP 30/4 180 SMO	6	1	G2	180	-		Stratos Pico 30/4 180	6	1	G2	180	-	
C 30-25 Rio	10	1	180	HSP 30/4 180 SMO	6	1	G2	180	-		Stratos Pico 30/4 180	6	1	G2	180	-	
C 30-40 Rio	10	1	180	HSP 30/4 180 SMO	6	1	G2	180	-		Stratos Pico 30/4 180	6	1	G2	180	-	
C 30-50 Rio	10	1	180	HSP 30/6 180 SMO	6	1	G2	180	-		Stratos Pico 30/6 180	6	1	G2	180	-	
C 30-60 Rio	10	1	180	HSP 30/6 180 SMO	6	1	G2	180	-		Stratos Pico 30/6 180	6	1	G2	180	-	
C 32/20 Riomatic	10	1	180	HSP 30/4 180 SMO	6	1	G2	180	-		Stratos Pico 30/4 180	6	1	G2	180	-	
C 32/25 Rio	10	1	180	HSP 30/4 180 SMO	6	1	G2	180	-		Stratos Pico 30/4 180	6	1	G2	180	-	
C 32/35 Riomatic	10	1	180	HSP 30/6 180 SMO	6	1	G2	180	-		Stratos Pico 30/6 180	6	1	G2	180	-	
C 32/40 Rio	10	1	180	HSP 30/4 180 SMO	6	1	G2	180	-		Stratos Pico 30/4 180	6	1	G2	180	-	
C 32/50 Rio	10	1	180	HSP 30/6 180 SMO	6	1	G2	180	-		Stratos Pico 30/6 180	6	1	G2	180	-	
C 32/60 Rio	10	1	180	HSP 30/6 180 SMO	6	1	G2	180	-		Stratos Pico 30/6 180	6	1	G2	180	-	
Calio S 30-40	10	1	180	HSP 30/4 180 SMO	6	1	G2	180	-		Stratos Pico 30/4 180	6	1	G2	180	-	
Calio S 30-60	10	1	180	HSP 30/6 180 SMO	6	1	G2	180	-		Stratos Pico 30/6 180	6	1	G2	180	-	
Calio S 30-60 BMS	10	1	180	HSP 30/6 180 SMO	6	1	G2	180	-		Stratos Pico 30/6 180	10	1	G2	180	-	
D 30 D	10	3	206	HSP 30/6 180 SMO	6	1	G2	180	1x R09	9	Stratos Pico 30/6 180	10	1	G2	180	1x R09	9
E 30/1-5 Riotron	10	1	180	HSP 30/6 180 SMO	6	1	G2	180	-		Stratos Pico 30/6 180	6	1	G2	180	-	
Riovar D 30	6/10	3	206	HSP 30/6 180 SMO	6	1	G2	180	1x R09	9	Stratos Pico 30/6 180	6	1	G2	180	1x R09	9
S 30-40 Riotronic	10	1	180	HSP 30/4 180 SMO	6	1	G2	180	-		Stratos Pico 30/4 180	10	1	G2	180	-	
S 30-60 Riotronic	10	1	180	HSP 30/6 180 SMO	6	1	G2	180	-		Stratos Pico 30/6 180	6	1	G2	180	-	
DN 32																	
Rio-Eco 32-120	6/10	1	220	SPS-I 30/12 180	10	1	G2	180	2x RF03	14	Stratos 32/1-12	6/10	1	32	220	-	14
DN 40																	
40-1/10 Riotec	6/10	1	250	SPS-I 30/12 180	10	1	G2	180	2xRF12 / 1xF26		Stratos 40/12 250	6/10	1	40	250	-	
40-10 D Rio	6/10	3	250	SPS-I 30/12 180	10	1	G2	180	2xRF12 / 1xF26	9	Stratos 40/12 250	6/10	1	40	250	-	9
40-100 D Rio	6/10	3	250	SPS-I 30/12 180	10	1	G2	180	2xRF12 / 1xF26	9	Stratos 40/12 250	6/10	1	40	250	-	9
40-100 Riotec	6/10	1	250	SPS-I 30/12 180	10	1	G2	180	2xRF12 / 1xF26		Stratos 40/12 250	6/10	1	40	250	-	
40-120 Rio-Eco	6/10	1	250	SPS-I 30/12 180	10	1	G2	180	2xRF12 / 1xF26		Stratos 40/12 250	6/10	1	40	250	-	
40-150 D Rio	6/10	3	250							9	Stratos 40/16 250	6/10	1	40	250	-	9
40-4 E/D Rio	6/10	3/1	220	SPS-I 40/8 220	10	1	40	220	-	9	Stratos 40/4 220	6/10	1	40	220	-	9
40-40 E/D Rio	6/10	3/1	220	SPS-I 40/8 220	10	1	40	220	-	9	Stratos 40/4 220	6/10	1	40	220	-	9
40-40 Rio-Eco	6/10	1	220	SPS-I 40/8 220	10	1	40	220	-		Stratos 40/4 220	6/10	1	40	220	-	
40-40 Riotec	6/10	1	220	SPS-I 40/8 220	10	1	40	220	-		Stratos 40/4 220	6/10	1	40	220	-	
40-7 E/D Rio	6/10	3/1	250	SPS-I 40/12 220	10	1	40	220	1x F01	9	Stratos 40/8 220	6/10	1	40	220	1x F01	9
40-70 E/D Rio	6/10	3/1	250	SPS-I 40/12 220	10	1	40	220	1x F01	9	Stratos 40/8 220	6/10	1	40	220	1x F01	9
40-80 Rio-Eco	6/10	1	220	SPS-I 40/12 220	10	1	40	220	-		Stratos 40/8 220	6/10	1	40	220	-	
42-12 E/D Riovar	6/10	3/1	250	SPS-I 40/12 220	10	1	40	220	1x F01	9	Stratos 40/8 220	6/10	1	40	220	1x F01	9
42-17 E/D Riovar	6/10	3/1	250	SPS-I 40/12 220	10	1	40	220	1x F01	9	Stratos 40/8 220	6/10	1	40	220	1x F01	9
42-25 E/D Riovar	6/10	3/1	250	SPS-I 40/12 220	10	1	40	220	1x F01	9	Stratos 40/8 220	6/10	1	40	220	1x F01	9
42-6 E/D Riovar	6/10	3/1	250	SPS-I 40/8 220	10	1	40	220	1x F01	9	Stratos 40/4 220	6/10	1	40	220	1x F01	9
42-7 E/D Riovar	6/10	3/1	220	SPS-I 40/8 220	10	1	40	220	-	9	Stratos 40/4 220	6/10	1	40	220	-	9
44-18 D Riovar	6/10	3	320	SPS-I 40/12 220	10	1	40	220	2x F26	9	Stratos 40/8 220	6/10	1	40	220	2x F26	9
44-30 D Riovar	6/10	3	320	SPS-I 40/12 220	10	1	40	220	2x F26	9	Stratos 40/8 220	6/10	1	40	220	2x F26	9
44-8 E/D Riovar	6/10	3/1	250	SPS-I 40/8 220	10	1	40	220	1x F01	9	Stratos 40/4 220	6/10	1	40	220	1x F01	9
A 4 V Riomatic	6/10	3/1	250	SPS-I 40/8 220	10	1	40	220	1x F01	9	Stratos 40/4 220	6/10	1	40	220	1x F01	9
C 4 V Riomatic	6/10	1	200	SPS-I 40/8 220	10	1	40	220	RA		Stratos 40/4 220	6/10	1	40	220	RA	
D 40 D	6/10	3	220	SPS-I 40/8 220	10	1	40	220	-	9	Stratos 40/4 220	6/10	1	40	220	-	9
E 40/1-5 Riotron	6/10	1	220	SPS-I 40/8 220	10	1	40	220	-		Stratos 40/4 220	6/10	1	40	220	-	
K 48	6/10	3/1	250	SPS-I 40/8 220	10	1	40	220	1x F01	9	Stratos 40/4 220	6/10	1	40	220	1x F01	9
L 4	6/10	3/1	250	SPS-I 40/12 220	10	1	40	220	1x F01	9	Stratos 40/8 220	6/10	1	40	220	1x F01	9
M 4	6/10	3/1	250	SPS-I 30/12 180	10	1	G2	180	2xRF12 / 1xF26	9	Stratos 40/12 250	6/10	1	40	250	-	9
DN 50																	
50-1/10 Riotec	6/10	1	280								Stratos 50/12 280	6/10	1	50	280	-	
50-1/7 Riotec	6/10	1	280								Stratos 50/9 280	6/10	1	50	280	-	
50-10 D Rio	6/10	3	280								Stratos 50/12 280	6/10	1	50	280	-	9
50-100 D Rio	6/10	3	280								Stratos 50/12 280	6/10	1	50	280	-	9
50-100 Riotec	6/10	1	280								Stratos 50/12 280	6/10	1	50	280	-	
50-120 Rio-Eco	6/10	1	280								Stratos 50/12 280	6/10	1	50	280	-	
50-150 D Rio	6/10	3	340								Stratos 50/16 340	6/10	1	50	340	-	9
50-4 E/D Rio	6/10	3/1	240	SPS-I 30/12 180	10	1	G2	180	2xRF06 / 1xF04	9	Stratos 50/6 240	6/10	1	50	240	-	9

KSB				Hoval													
Type	PN	M	L	Type	PN	M	G/DN	L	AGS	Rem.	Type	PN	M	G/DN	L	AGS	Rem.
50-40 E/D Rio	6/10	3/1	240	SPS-I 30/12 180	10	1	G2	180	2xRF06 / 1xF04	9	Stratos 50/6 240	6/10	1	50	240	-	9
50-60 Riotec	6/10	1	240	SPS-I 30/12 180	10	1	G2	180	2xRF06 / 1xF04		Stratos 50/6 240	6/10	1	50	240	-	
50-7 D Rio	6/10	3	280								Stratos 50/9 280	6/10	1	50	280	-	9
50-70 D Rio	6/10	3	280								Stratos 50/9 280	6/10	1	50	280	-	9
50-70 Riotec	6/10	1	280								Stratos 50/9 280	6/10	1	50	280	-	
50-80 Rio-Eco	6/10	1	240	SPS-I 30/12 180	10	1	G2	180	2xRF06 / 1xF04		Stratos 50/8 240	6/10	1	50	240	-	
50-90 Rio-Eco	6/10	1	280								Stratos 50/9 280	6/10	1	50	280	-	
52-12 E/D Riovar	6/10	3/1	280							9	Stratos 50/6 240	6/10	1	50	240	2x F03	9
52-15 E/D Riovar	6/10	3/1	240	SPS-I 30/12 180	10	1	G2	180	2xRF06 / 1xF04	9	Stratos 50/6 240	6/10	1	50	240	-	9
52-17 E/D Riovar	6/10	3/1	240	SPS-I 30/12 180	10	1	G2	180	2xRF06 / 1xF04	9	Stratos 50/6 240	6/10	1	50	240	-	9
52-25 E/D Riovar	6/10	3/1	280								Stratos 50/6 240	6/10	1	50	240	2x F03	9
52-32 D Riovar	6/10	3	280								Stratos 50/9 280	6/10	1	50	280	-	9
52-40 D Riovar	6/10	3	280								Stratos 50/9 280	6/10	1	50	280	-	9
52-45 D Riovar	6/10	3	280								Stratos 50/12 280	6/10	1	50	280	-	9
52-85 D Riovar	6/10	3	340								Stratos 50/16 340	6/10	1	50	340	-	9
54-100 D Riovar	10	3	440								Stratos 50/16 340	6/10	1	50	340	RA	9
54-150 D Riovar	10	3	460								Stratos 50/16 340	6/10	1	50	340	RA	9
54-18 D Riovar	6/10	3	280								Stratos 50/6 240	6/10	1	50	240	2x F03	9
54-30 D Riovar	6/10	3	340								Stratos 50/9 280	6/10	1	50	280	2x F04	9
54-48 D Riovar	6/10	3	340								Stratos 50/9 280	6/10	1	50	280	2x F04	9
D 50 D	6/10	3	240	SPS-I 30/12 180	10	1	G2	180	2xRF06 / 1xF04	9	Stratos 50/8 240	6/10	1	50	240	-	9
E 50/1-7 Riotron	6	1	240	SPS-I 30/12 180	10	1	G2	180	2xRF06 / 1xF04		Stratos 50/6 240	6/10	1	50	240	-	
K 56	6	3/1	280								Stratos 50/6 240	6/10	1	50	240	2x F03	9
K 57	6	3/1	280								Stratos 50/6 240	6/10	1	50	240	2x F03	9
K 58	6	3/1	280								Stratos 50/6 240	6/10	1	50	240	2x F03	9
K 59	6	3/1	280								Stratos 50/6 240	6/10	1	50	240	2x F03	9
L 5	6/10	3/1	280								Stratos 50/9 280	6/10	1	50	280	-	9
L 51	6/10	3/1	280								Stratos 50/6 240	6/10	1	50	240	2x F03	9
L 58	6	3/1	280								Stratos 50/9 280	6/10	1	50	280	-	9
L 59	6	3/1	280								Stratos 50/9 280	6/10	1	50	280	-	9
M 5	6/10	3	280								Stratos 50/9 280	6/10	1	50	280	-	
DN 65																	
62-130 D Riovar	6/10	3	340								Stratos 65/12 340	6/10	1	65	340	-	9
62-32 D Riovar	6/10	3	280								Stratos 65/9 280	6/10	1	65	280	-	9
62-40 D Riovar	6/10	3	340								Stratos 65/9 280	6/10	1	65	280	2x F11	9
62-60 D Riovar	6/10	3	340								Stratos 65/9 280	6/10	1	65	280	2x F11	9
62-65 D Riovar	6/10	3	340								Stratos 65/9 280	6/10	1	65	280	2x F11	9
62-70 D Riovar	6/10	3	340								Stratos 65/16 340	6/10	1	65	340	-	9
64-160 D Riovar	10	3	475								Stratos 65/16 340	6/10	1	65	340	1x F41	9
64-250 D Riovar	10	3	500								Stratos 65/16 340	6/10	1	65	340	RA	9
64-30 D Riovar	6/10	3	340								Stratos 65/9 280	6/10	1	65	280	2x F11	9
64-48 D Riovar	6/10	3	340								Stratos 65/9 280	6/10	1	65	280	2x F11	9
64-75 D Riovar	6/10	3	340								Stratos 65/9 280	6/10	1	65	280	2x F11	9
65-1/10 Riotec	6/10	1	340								Stratos 65/9 280	6/10	1	65	280	2x F11	
65-10 D Rio	6/10	3	340								Stratos 65/9 280	6/10	1	65	280	2x F11	9
65-100 D Rio	6/10	3	340								Stratos 65/9 280	6/10	1	65	280	2x F11	9
65-100 Riotec	6/10	1	340								Stratos 65/9 280	6/10	1	65	280	2x F11	
65-13 D Rio	6/10	3	340								Stratos 65/16 340	6/10	1	65	340	-	9
65-130 D Rio	6/10	3	340								Stratos 65/16 340	6/10	1	65	340	-	9
65-150 D Rio	6/10	3	340								Stratos 65/16 340	6/10	1	65	340	-	9
65-7 D Rio	6/10	3	280								Stratos 65/9 280	6/10	1	65	280	-	9
D 65 D	6/10	3/1	280								Stratos 65/9 280	6/10	1	65	280	-	9
L 66	6	3/1	340								Stratos 65/9 280	6/10	1	65	280	2x F11	9
L 67	6	3/1	340								Stratos 65/9 280	6/10	1	65	280	2x F11	9
L 68	6	3/1	340								Stratos 65/9 280	6/10	1	65	280	2x F11	9
L 69	6	3/1	340								Stratos 65/9 280	6/10	1	65	280	2x F11	9
M 6	6/10	3	340								Stratos 65/9 280	6/10	1	65	280	2x F11	9
M 61	6/10	3	340								Stratos 65/9 280	6/10	1	65	280	2x F11	9
R 6	6/10	3	340								Stratos 65/16 340	6/10	1	65	340	-	9
Rio-Eco 65-120	6/10	1	340								Stratos 65/16 340	6/10	1	65	340	-	
Rio-Eco 65-90	6/10	1	280								Stratos 65/9 280	6/10	1	65	280	-	
DN 80																	
80-1/10 Riotec	6/10	1	360	Stratos 80/12 360	6	1	PN6	360	-		Stratos 80/12 360	10	1	PN10	360	-	
80-10 D Rio	6/10	3	360	Stratos 80/12 360	6	1	PN6	360	-	9	Stratos 80/12 360	10	1	PN10	360	-	9
80-100 D Rio	6/10	3	360	Stratos 80/12 360	6	1	PN6	360	-	9	Stratos 80/12 360	10	1	PN10	360	-	9
80-100 Riotec	6/10	1	360	Stratos 80/12 360	6	1	PN6	360	-		Stratos 80/12 360	10	1	PN10	360	-	
80-120 Rio-Eco	6/10	1	360	Stratos 80/12 360	6	1	PN6	360	-		Stratos 80/12 360	10	1	PN10	360	-	
80-7 D Rio	6/10	3	360	Stratos 80/12 360	6	1	PN6	360	-	9	Stratos 80/12 360	10	1	PN10	360	-	9
80-70 D Rio	6/10	3	360	Stratos 80/12 360	6	1	PN6	360	-	9	Stratos 80/12 360	10	1	PN10	360	-	9
82-100 D Riovar	6/10	3	360	Stratos 80/12 360	6	1	PN6	360	-	9	Stratos 80/12 360	10	1	PN10	360	-	9
82-130 D Riovar	6/10	3	360	Stratos 80/12 360	6	1	PN6	360	-	9	Stratos 80/12 360	10	1	PN10	360	-	9
82-60 D Riovar	6/10	3	360	Stratos 80/12 360	6	1	PN6	360	-	9	Stratos 80/12 360	10	1	PN10	360	-	9
82-65 D Riovar	6/10	3	360	Stratos 80/12 360	6	1	PN6	360	-	9	Stratos 80/12 360	10	1	PN10	360	-	9
82-85 D Riovar	6/10	3	360	Stratos 80/12 360	6	1	PN6	360	-	9	Stratos 80/12 360	10	1	PN10	360	-	9
84-48 D Riovar	6/10	3	360	Stratos 80/12 360	6	1	PN6	360	-	9	Stratos 80/12 360	10	1	PN10	360	-	9
84-75 D Riovar	6/10	3	360	Stratos 80/12 360	6	1	PN6	360	-	9	Stratos 80/12 360	10	1	PN10	360	-	9
D 80 D	6/10	3	330	Stratos 80/12 360	6	1	PN6	360	RA	9	Stratos 80/12 360	10	1	PN10	360	RA	9
K 86	6	3/1	330	Stratos 80/12 360	6	1	PN6	360	RA	9							

KSB				Hoval													
Type	PN	M	L	Type	PN	M	G/DN	L	AGS	Rem.	Type	PN	M	G/DN	L	AGS	Rem.
K 87	6	3	330	Stratos 80/12 360	6	1	PN6	360	RA	9							
K 88	6	3/1	330	Stratos 80/12 360	6	1	PN6	360	RA	9							
K 89	6	3	330	Stratos 80/12 360	6	1	PN6	360	RA	9							
M 8	6	3	360	Stratos 80/12 360	6	1	PN6	360	-	9							
M 86	6	3	400	Stratos 80/12 360	6	1	PN6	360	1x F18	9							
M 87	6	3	400	Stratos 80/12 360	6	1	PN6	360	1x F18	9							
M 88	6	3	400	Stratos 80/12 360	6	1	PN6	360	1x F18	9							
M 89	6	3	400	Stratos 80/12 360	6	1	PN6	360	1x F18	9							
R 8	6/10	3	360	Stratos 80/12 360	6	1	PN6	360	-	9	Stratos 80/12 360	10	1	PN10	360	-	9
S 8	6/10	3	360	Stratos 80/12 360	6	1	PN6	360	-	9	Stratos 80/12 360	10	1	PN10	360	-	9
DN 100																	
100-100 D Rio	6/10	3	360	Stratos 100/12 360	6	1	PN6	360	-	9	Stratos 100/12 360	10	1	PN10	360	-	9
100-100 Riotec	6/10	1	360	Stratos 100/12 360	6	1	PN6	360	-		Stratos 100/12 360	10	1	PN10	360	-	
100-120 Rio-Eco	6/10	1	360	Stratos 100/12 360	6	1	PN6	360	-		Stratos 100/12 360	10	1	PN10	360	-	
102-130 D Riovar	6/10	3	395	Stratos 100/12 360	6	1	PN6	360	1x F34	9	Stratos 100/12 360	10	1	PN10	360	1x F34	9
104-110 D Riovar	6/10	3	395	Stratos 100/12 360	6	1	PN6	360	1x F34	9	Stratos 100/12 360	10	1	PN10	360	1x F34	9
D 100 D	6/10	3	380	Stratos 100/12 360	6	1	PN6	360	RA	9	Stratos 100/12 360	10	1	PN10	360	RA	9
M 108	6	3	450	Stratos 100/12 360	6	1	PN6	360	1xF34 / 1xF35	9							
M 109	6	3	450	Stratos 100/12 360	6	1	PN6	360	1xF34 / 1xF35	9							
R 10	6/10	3	450	Stratos 100/12 360	6	1	PN6	360	1xF34 / 1xF35	9	Stratos 100/12 360	10	1	PN10	360	1xF34 / 1xF35	9
R 101	6/10	3	450	Stratos 100/12 360	6	1	PN6	360	1xF34 / 1xF35	9	Stratos 100/12 360	10	1	PN10	360	1xF34 / 1xF35	9
S 10	6/10	3	450	Stratos 100/12 360	6	1	PN6	360	1xF34 / 1xF35	9	Stratos 100/12 360	10	1	PN10	360	1xF34 / 1xF35	9
DN 125																	
D 125 D	6/10	3	450	Stratos 100/12 360	6	1	PN6	360	RA	9	Stratos 100/12 360	10	1	PN10	360	RA	9

KSB				Hoval Highly efficient							Hoval Premium highly efficient						
Type	PN	M	L	Type	PN	M	G/DN	L	AGS	Rem.	Type	PN	M	G/DN	L	AGS	Rem.
Circulating pumps domestic hot water																	
G 1 (Rp ½)																	
C 20-10	10	1	140	SPS-Z 15/7 130 SMO	10	1	G1	130	RA								
R 12-1 E	10	1	140	SPS-Z 15/7 130 SMO	10	1	G1	130	RA								
G 1¼ (Rp ¾)																	
C 12/15	10	1	150	SPS-Z 20/7 150 SMO	10	1	G1¼	150	-								
C 12/15 T	10	1	150	SPS-Z 20/7 150 SMO	10	1	G1¼	150	-								
C 12/30	10	1	150	SPS-Z 20/7 150 SMO	10	1	G1¼	150	-		Stratos Pico-Z 25/6 180	10	1	G1½	180	RA	
C 12/30 T	10	1	150	SPS-Z 20/7 150 SMO	10	1	G1¼	150	-		Stratos Pico-Z 25/6 180	10	1	G1½	180	RA	
C 20-15	10	1	150	SPS-Z 20/7 150 SMO	10	1	G1¼	150	-								
C 20-30	10	1	150	SPS-Z 20/7 150 SMO	10	1	G1¼	150	-		Stratos Pico-Z 25/6 180	10	1	G1½	180	RA	
G 1½ (Rp 1)																	
25-80 (B) Rio-Eco	10	1	180	SPS-Z 25/7 180 SMO	10	1	G1½	180	-		Stratos-Z 30/8 180	10	1	G2	180	RA	
C 22/40	10	1	180	SPS-Z 25/7 180 SMO	10	1	G1½	180	-		Stratos Pico-Z 25/6 180	10	1	G1½	180	-	
C 22/40 T	10	1	180	SPS-Z 25/7 180 SMO	10	1	G1½	180	-		Stratos Pico-Z 25/6 180	10	1	G1½	180	-	
C 22/55	10	1	180	SPS-Z 25/7 180 SMO	10	1	G1½	180	-		Stratos Pico-Z 25/6 180	10	1	G1½	180	-	
C 22/55 T	10	1	180	SPS-Z 25/7 180 SMO	10	1	G1½	180	-		Stratos Pico-Z 25/6 180	10	1	G1½	180	-	
C 241 Y	10	1	180	SPS-Z 25/7 180 SMO	10	1	G1½	180	-		Stratos Pico-Z 25/6 180	10	1	G1½	180	-	
C 243 Y	10	1	180	SPS-Z 25/7 180 SMO	10	1	G1½	180	-		Stratos Pico-Z 25/6 180	10	1	G1½	180	-	
C 25-40	10	1	180	SPS-Z 25/7 180 SMO	10	1	G1½	180	-		Stratos Pico-Z 25/6 180	10	1	G1½	180	-	
C 25-60	10	1	180	SPS-Z 25/7 180 SMO	10	1	G1½	180	-		Stratos Pico-Z 25/6 180	10	1	G1½	180	-	
R 22-2 E	10	1	180	SPS-Z 25/7 180 SMO	10	1	G1½	180	-		Stratos Pico-Z 25/6 180	10	1	G1½	180	-	
G 2 (Rp 1¼)																	
30-120 (B) Rio-Eco	10	1	180	Top-Z 30/10 180	10	1	G2	180	-		Stratos-Z 30/12 180	10	1	G2	180	-	
30-80 (B) Rio-Eco	10	1	180	Top-Z 30/10 180	10	1	G2	180	-		Stratos-Z 30/8 180	10	1	G2	180	-	
BZ 1 E/D	10	3/1	180	SPS-Z 25/7 180 SMO	10	1	G1½	180	RA		Stratos Pico-Z 25/6 180	10	1	G1½	180	RA	
BZ 2 E/D	10	3/1	180	Top-Z 30/10 180	10	1	G2	180	-		Stratos-Z 30/8 180	10	1	G2	180	-	
C 30-70	10	1	180	Top-Z 30/10 180	10	1	G2	180	-		Stratos-Z 30/8 180	10	1	G2	180	-	
G 22-5 E/D	10	3/1	180	SPS-Z 25/7 180 SMO	10	1	G1½	180	RA		Stratos Pico-Z 25/6 180	10	1	G1½	180	RA	
G 22-8 E/D	10	3/1	180	SPS-Z 25/7 180 SMO	10	1	G1½	180	RA		Stratos Pico-Z 25/6 180	10	1	G1½	180	RA	
G 24-3 E/D	10	3/1	180	Top-Z 30/10 180	10	1	G2	180	-		Stratos-Z 30/8 180	10	1	G2	180	-	
G 32-12 E/D	10	3/1	180	Top-Z 30/10 180	10	1	G2	180	-		Stratos-Z 30/8 180	10	1	G2	180	-	
GG 1 E/D	10	3/1	180	SPS-Z 25/7 180 SMO	10	1	G1½	180	RA		Stratos Pico-Z 25/6 180	10	1	G1½	180	RA	
GG 2 E/D	10	3/1	180	Top-Z 30/10 180	10	1	G2	180	-		Stratos-Z 30/8 180	10	1	G2	180	-	
R 22-5 E/D	10	3/1	180	SPS-Z 25/7 180 SMO	10	1	G1½	180	RA		Stratos Pico-Z 25/6 180	10	1	G1½	180	RA	
R 22-8 E/D	10	3/1	180	SPS-Z 25/7 180 SMO	10	1	G1½	180	RA		Stratos Pico-Z 25/6 180	10	1	G1½	180	RA	
R 24-3 E/D	10	3/1	180	Top-Z 30/10 180	10	1	G2	180	-		Stratos-Z 30/8 180	10	1	G2	180	-	
R 32-12 E/D	10	3/1	180	Top-Z 30/10 180	10	1	G2	180	-		Stratos-Z 30/8 180	10	1	G2	180	-	
R 32-4 E/D	10	3/1	180	Top-Z 30/10 180	10	1	G2	180	-		Stratos-Z 30/8 180	10	1	G2	180	-	
RG 1 E/D	10	3/1	180	SPS-Z 25/7 180 SMO	10	1	G1½	180	RA		Stratos Pico-Z 25/6 180	10	1	G1½	180	RA	
RG 2 E/D	10	3/1	180	Top-Z 30/10 180	10	1	G2	180	-		Stratos-Z 30/8 180	10	1	G2	180	-	
DN 40																	
40-120 (B) Rio-Eco	10	1	250								Stratos-Z 40/12 250	6/10	1	40	250	-	
C 40/70 D Riotherm	6/10	3	250	Top-Z 40/7 250	10	1	40	250	-	9	Stratos-Z 40/8 220	6/10	1	40	220	1x F01-MS	9
G 40-17 E/D	10	3/1	250	Top-Z 40/7 250	10	1	40	250	-	9	Stratos-Z 40/8 220	6/10	1	40	220	1x F01-MS	9
G 42-17 E/D	10	3	250	Top-Z 40/7 250	10	1	40	250	-	9	Stratos-Z 40/8 220	6/10	1	40	220	1x F01-MS	9
R 40-17 E/D	10	3/1	250	Top-Z 40/7 250	10	1	40	250	-	9	Stratos-Z 40/8 220	6/10	1	40	220	1x F01-MS	9
R 42-17 E/D	10	3	250	Top-Z 40/7 250	10	1	40	250	-	9	Stratos-Z 40/8 220	6/10	1	40	220	1x F01-MS	9
DN 50																	
50-90 (B) Rio-Eco	10	1	280														
C 50/70 D Riotherm	6/10	3	280	Top-Z 50/7 280	10	3	50	280	-	9							
DN 65																	
65-120 (B) Rio-Eco	10	1	340	Top-Z 65/10 340	10	3	65	340	-								

Vortex				Hoval Highly efficient							Hoval Premium highly efficient						
Type	PN	M	L	Type	PN	M	G/DN	L	AGS	Rem.	Type	PN	M	G/DN	L	AGS	Rem.
Circulating pumps domestic hot water																	
Rp ½																	
100	10	1	84	SPS-Z 15/7 130 SMO	10	1	G1	130	RA		Star-Z Nova 15	10	1	Rp½	84	-	
BW 150	10	1	80	SPS-Z 15/7 130 SMO	10	1	G1	130	RA		Star-Z Nova 15	10	1	Rp½	84	-	
BW 150 (90)	10	1	90	SPS-Z 15/7 130 SMO	10	1	G1	130	RA		Star-Z Nova 15	10	1	Rp½	84	-	
BW 151	10	1	80	SPS-Z 15/7 130 SMO	10	1	G1	130	RA		Star-Z Nova 15	10	1	Rp½	84	-	
BW 152	10	1	80	SPS-Z 15/7 130 SMO	10	1	G1	130	RA		Star-Z Nova 15	10	1	Rp½	84	-	
BW 153 R	10	1	80														
BW 153 V	10	1	80														
BWZ 150	10	1	90								Motor Star-Z Nova 15	-	1	-	-	-	
BWZ 150	10	1	80	SPS-Z 15/7 130 SMO	10	1	G1	130	RA		Star-Z Nova 15	10	1	Rp½	84	-	
BWZ 151	10	1	80	SPS-Z 15/7 130 SMO	10	1	G1	130	RA		Star-Z Nova 15	10	1	Rp½	84	-	
BWZ 152	10	1	80														
BWZ 153 R	10	1	80														
Rp ¾																	
100 V	10	1	120								Star-Z 15 TT	10	1	G1	138		
100 VK	10	1	120								Star-Z 15 TT	10	1	G1	138		
BW 150	10	1	120	SPS-Z 15/7 130 SMO	10	1	G1	130	RA								
BWZ 150	10	1	120	SPS-Z 15/7 130 SMO	10	1	G1	130	RA								
BWZ 153 V	10	1	110														
G 1¼ (Rp ¾)																	
BW 150 (120)	10	1	120								Star-Z Nova 15	10	1	Rp½	84	RA	
BW 150 V	10	1	110								Star-Z 15 TT	10	1	G1	138	RA	
BW 151 V	10	1	110								Star-Z 15 TT	10	1	G1	138	RA	
BW 152 V	10	1	110								Star-Z 15 TT	10	1	G1	138	RA	
BW 400	10	1	150								Stratos Pico-Z 25/6 180	10	1	G1½	180	RA	
BW 400 V	10	1	110								Stratos Pico-Z 25/6 180	10	1	G1½	180	RA	
BWV 150	10	1	120	Star-Z Nova 15	10	1	Rp½	84	-								
BWZ 150 (120)	10	1	120	Star-Z Nova 15	10	1	Rp½	84	-								
BWZ 150 V	10	1	150														
BWZ 150 V	10	1	150														
BWZ 150 V	10	1	110	Motor Star-Z Nova 15	-	1	-	-	-		Star-Z 15 TT	10	1	G1	138	RA	
BWZ 151 V	10	1	110								Star-Z 15 TT	10	1	G1	138	RA	
BWZ 153 V	10	1	110								Star-Z 15 TT	10	1	G1	138	RA	
BWZ 400	10	1	150								Stratos Pico-Z 25/6 180	10	1	G1½	180	RA	
BWZ 400 V	10	1	110								Stratos Pico-Z 25/6 180	10	1	G1½	180	RA	
G 1½ (Rp 1)																	
BW 352	10	1	150	SPS-Z 25/7 180 SMO	10	1	G1½	180	-		Stratos Pico-Z 25/6 180	10	1	G1½	180	RA	
BW 401 V	10	1	150	SPS-Z 25/7 180 SMO	10	1	G1½	180	-		Stratos Pico-Z 25/6 180	10	1	G1½	180	RA	
BWZ 401 V	10	1	150	SPS-Z 25/7 180 SMO	10	1	G1½	180	-		Stratos Pico-Z 25/6 180	10	1	G1½	180	RA	
BWZ 401 V	10	1	150	SPS-Z 25/7 180 SMO	10	1	G1½	180	-		Stratos Pico-Z 25/6 180	10	1	G1½	180	RA	
M 551 BW BZ	10	1	130	SPS-Z 15/7 130 SMO	10	1	G1	130	1x PAS12		Stratos Pico-Z 25/6 180	10	1	G1½	180	RA	
M 551 BW GG	10	1	130	SPS-Z 15/7 130 SMO	10	1	G1	130	1x PAS12		Stratos Pico-Z 25/6 180	10	1	G1½	180	RA	

1. General

1.1 The following Terms and Conditions shall apply to all our present and future contracts for deliveries and other services (even if the said Terms and Conditions are not specifically mentioned in verbal, telephonic or fax communications).

1.2 All deviations from the present Terms and Conditions, ancillary verbal agreements and subsequent contractual amendments shall only be valid if they have been confirmed by us in writing.

1.3 Buying terms and conditions of the client shall not be valid even if they are not specifically rejected by us. Our Standard Terms and Conditions of Delivery shall be regarded as accepted at the latest upon receipt of our goods and services by the client.

1.4 If a provision of the present Terms and Conditions of Delivery proves to be wholly or partially invalid, the contracting parties shall replace the aforesaid provision by a new provision which comes as close as possible to the legal and economic intention of the invalid provision.

2. Offers

2.1 Our offers shall be subject to change without notice.

2.2 Orders shall only be regarded as accepted when they have been confirmed by us in writing.

2.3 Illustrations, drawings and all technical details in catalogues and printed material shall be approximate values as customary within the industry. They shall only be binding if specific reference is made to them in the contract. We shall also reserve the right to make technical and design changes after the conclusion of the contract.

2.4 Cost estimates, drawings and other documents shall remain our property and shall be subject to copyright protection; they may not be made available to third parties.

3. Regulations in the country of destination

3.1 At the latest at the time of the order, the buyer shall draw our attention to the regulations and standards in force in the country of destination relating to the design of the delivered goods and the operation thereof and also to the execution of services.

3.2 Our deliveries and services shall comply with the regulations and standards in the country of destination provided the buyer has drawn our attention thereto in accordance with Section 3.1.

3.3 The buyer shall duly inform us of any special application features of goods ordered from us if these differ from our general recommendations.

4. Prices

4.1 Our prices shall be ex works, net, excluding packaging.

4.2 All ancillary costs, e.g. freight, insurance, export, transit, import and other approvals, licenses and authentications, shall be for the account of the buyer. The buyer shall also bear all taxes, charges, customs duty, etc., which are levied in connection with the contract.

4.3 We shall reserve the right to make price adjustments if wage rates or material prices change between the date of the order confirmation and the contractual performance of the contract. Price increases shall normally be notified three months in advance. We shall be bound to the price stated in the order confirmation for a period of three months after the effective date of the price increase.

5. Payment terms

5.1 Unless otherwise agreed in writing, our invoices shall be payable within thirty days with no cash discount. Payment shall be deemed to have been made when the amount in question is at our unrestricted disposal on our account in Swiss Franks.

5.2 Payment dates shall be observed even if any delays whatsoever occur after shipment of the goods from our works. The buyer shall not be permitted to reduce or withhold payments on account of complaints or counterclaims not recognised by us.

5.3 Payments shall also be made if insignificant components are missing but usage of the delivered goods is not rendered impossible as a result or if rectification work has to be carried out on the delivery. We shall be entitled to reject rectification of the defect as long as the buyer has not discharged his/its obligations to us.

5.4 If the buyer fails to comply with the agreed payment dates, default interest shall be paid from the agreed due date without a reminder being issued; the aforesaid interest shall be based on the interest rates prevailing at the domicile of the buyer, but shall be not less than four percent above the current discount rate of the Swiss Central Bank.

5.5 We shall be entitled to make deliveries of pending orders dependent upon settlement of outstanding claims.

6. Reservation of title

6.1 Delivered goods shall remain our property (reserved goods) pending full and complete payment of all present and future claims to which we are entitled regardless of their legal cause. This shall also apply if payments are made in settlement of specifically designated claims.

6.2 The buyer shall be entitled to process and sell reserved goods in the ordinary course of business.

6.3 If our reserved goods are combined or intermingled with other goods, the buyer shall hereby transfer his/its ownership rights in the new goods or chattels to us upon the conclusion of the contract in the amount of the invoice value of the reserved goods.

6.4 If the goods are resold by the buyer, he/it shall hereby transfer to us upon the conclusion of the contract with us his/its claims arising from the aforesaid resale in the amount of the invoice value of the reserved goods.

6.5 If the reserved goods are used by the buyer to perform a works or works delivery contract, his/its claim from the aforesaid works or works delivery contract shall hereby be assigned to us in the same amount and on the same date as for the purchase price claim (Section 6.4).

6.6 As long as he/it is honouring his/its payment obligations, the buyer shall, however, be authorised to collect his/its resale claim which has been assigned to us. He/it may not dispose of such claims by way of assignment to third parties, however. The empowerment of the buyer to collect the claim may be revoked by us at any time. We shall be entitled to notify third party debtors of the assignment. The buyer shall be entitled to provide us with the necessary information and documents in order to enable us to enforce our rights.

6.7 If the value of our securities exceeds our total claims by more than 10 %, we shall be obliged to release securities of our choice at the request of the buyer.

6.8 The buyer shall inform us immediately of any pledge or other impediment to our property enforced by third parties.

6.9 The buyer shall be obliged to collaborate in measures required to protect our title. He/it shall, in particular, empower us upon the conclusion of the contract to make entries or prior notice of the reservation of title at his/its cost in public registers, books and documents, etc., in accordance with the relevant national laws and shall perform all formalities in this respect.

6.10 The buyer shall maintain the reserved goods at his/its cost for the duration of the reservation of title and shall insure the said goods against theft, breakage, fire, water and other risks in our favour. He/it shall also take all steps to ensure that our property claims are neither adversely affected nor rescinded.

7. Delivery periods

7.1 Delivery periods and deadlines stated by us shall be approximate unless we have given an express written confirmation of a deadline as binding.

7.2 Delivery periods shall be deemed to have been met if notification of readiness to deliver has been sent to the buyer before the end of the delivery period.

7.3 The delivery period shall be prolonged if details required for the performance of the contract are not received on time or if they are subsequently changed by the buyer.

7.4 The delivery period shall also be reasonably prolonged if impediments arise which we cannot avert despite exercise of the necessary care (e.g. major operational disruptions, industrial disputes, delayed or defective deliveries, force majeure, etc.).

7.5 If an agreed delivery date is met by more than 14 days, the buyer shall be obliged to set us a reasonable period of grace. The buyer may only withdraw from the contract if our goods have not been delivered by the end of the said period of grace. Compensation claims for non-performance, delayed performance or any consequential losses shall be excluded unless there was gross negligence on our part.

8. Transfer of risk

8.1 Unless expressly agreed otherwise in writing, our “ex works” deliveries shall be made in accordance with the international rules on the interpretation of commercial clauses of the International Chamber of Commerce (Incoterms) in the version in force on the date of the order confirmation.

8.2 The transfer of risk shall be determined by the aforesaid Incoterms.
8.3 Insurance against damages of any kind shall be the responsibility of the buyer.
8.4 Complaints in connection with the transport shall be immediately notified by the buyer to the last carrier upon receipt of the delivery.
8.5 If despatch is delayed at the request of the buyer or for any other reasons not attributable to us, the risk shall pass to the buyer on the original date envisaged for the "ex works" delivery. We shall be entitled to demand payment from this date onwards.

9. Delivery inspection

9.1 The buyer shall be required to inspect deliveries immediately. If the goods do not comply with the order or the delivery note or if visible defects are identified, he/it shall be obliged to notify the aforesaid to us in writing within eight days of receipt. Later complaints shall not be recognised. (Re transport damages, cf. Section 8.4)

10. Assembly and operations

10.1 The assembly, putting into operation, operation and maintenance of the delivered goods shall be carried out in accordance with our guidelines. They may be executed by our staff or by appropriately trained third parties as agreed with the buyer.
10.2 If we require a commissioning certificate for certain product groups, warranty claims for the proper functioning of the equipment can only be enforced if a proper hand-over has been documented by a confirmed commissioning certificate received by us within one month of the hand-over.

11. Warranty

11.1 Warranty period
11.1.1 The general warranty period shall be 12 months from the first commissioning but no longer than 18 months from the date on which the relevant goods left our works.
If despatch is delayed for reasons not attributable to us, the warranty shall lapse no later than 18 months after notification of the readiness to deliver.
The general warranty period shall exclude electrical components for which the warranty period shall be 6 months from the first commissioning but no later than 12 months from the date of shipment from our works.
11.1.2 We refer to Section 11.6.1 with regard to the warranty period for third party products.
11.1.3 The warranty period for components which we have repaired during the warranty period or have delivered as replacement shall be 12 months from the completion of our repair or from the date of the replacement delivery but no longer than the end of a period equivalent to twice the original warranty period as per Section 11.1.1.
11.2 Liability for material, design and workmanship defects
11.2.1 The contractual condition of the goods shall be based on the condition upon the transfer of risk.
11.2.2 Defects shall be notified to us immediately in writing.
11.2.3 We shall be liable for all components which can be shown to have become defective or unusable before the end of the warranty period as a result of defective materials, defective design or defective workmanship, with such components being repaired or replaced ex works immediately at our choice.
11.3 Liability for warranted qualities
11.3.1 Warranted qualities shall only be those which are specifically designated as such in the order confirmation or in the relevant specifications.
11.3.2 The aforesaid assurance shall apply at the latest until the end of the warranty period. If a taking-over test has been agreed with the buyer, the assurance shall be deemed as performed if proof of the relevant qualities is furnished during the aforesaid test.
11.3.3 If the warranted qualities are not performed or only partially performed, the buyer shall be entitled to an immediate rectification. The buyer shall grant us the necessary time and opportunity for this purpose.
11.3.4 If the rectification is abortive or only partially successful, the buyer shall be entitled to a reasonable reduction of the purchase price. If the defect is so serious that it cannot be rectified within a reasonable period of time, and if deliveries or services for the notified purpose are not usable or are only usable to a much lesser extent, the buyer shall be entitled to refuse acceptance of the defective component or to withdraw from the contract if part-acceptance is economically unreasonable. We shall only be obliged to refund amounts which have been paid to us for the components affected by the aforesaid withdrawal.
11.4 Exclusion of liability for defects
11.4.1 Our liability shall exclude damages which cannot be proved to have been sustained as a result of defective material, defective design or defective workmanship.
11.4.2 Damages shall therefore be excluded for example which were caused by
- improper work of other persons with regard to planning, site preparation, assembly, operation and maintenance;
- plant concepts and designs which do not comply with the latest state of the art;
- non-observance of our guidelines for planning, assembly, commissioning, operations and maintenance;
- force majeure (e.g. thunderstorms).

11.4.3 The following shall be excluded in particular
- corrosion damages (e.g. as a result of aggressive water, unsuitable water treatment, oxygen intakes, emptying the plant over a longer period of time, falling below the dew point, chemical or electrochemical effects, etc.);
- damages caused by air pollution (e.g. the accumulation of intense dust, aggressive vapours, etc.);
- damages caused by unsuitable equipment and fuels;
- damages caused by overcharging, excessive water pressure, scaling, improper electrical connections and inadequate fuse protection.

11.4.4 Components shall also be excluded from the warranty which are subject to natural wear and tear (e.g. burner nozzles, combustion chamber inserts, ignition and monitoring components in contact with fire, fireclay and wall facings, fuses, seals and flexible tubes).
11.5 Commissioning certificate
11.5.1 We hereby draw attention to the due and proper hand-over and - if envisaged - the commissioning certificate in accordance with Section 10.2 as prerequisites for our warranty.
11.6 Deliveries and services of sub-contractors
11.6.1 Our liability for third party products which form a major part of the delivered goods (e.g. warehouse and conveying equipment, burners, measuring and control equipment, electrical components, flue gas and waste water cleaning equipment) shall - if permissible - be limited to an assignment of our claims against the suppliers of the said third party products.

12. Exclusion of further liability

12.1 The buyer shall have no rights and claims for materials, design and workmanship defects or the lack of warranted qualities unless specifically mentioned in Sections 11.1 to 11.6.
12.2 All claims for compensation, reduction in the contract price, rescission of the contract or withdrawal from the contract shall be excluded in particular unless these are specifically mentioned. Under no circumstances shall the buyer have any compensation claim for damages which were not sustained by the delivered goods themselves (e.g. replacement costs, cost for establishing the cause of the damage, expertises, production stoppages, production losses, lost orders, lost profit and other direct or indirect damages). The aforesaid liability exclusion shall not apply in the event of gross negligence on our part.
12.3 The exclusion as per Section 12.2 shall apply for all breaches of contract and all claims of the buyer regardless of why they were lodged from a legal point of view. It shall therefore also apply for a breach of any ancillary obligations (e.g. inadequate advice, etc.).

13. Jurisdiction

13.1 **The place of jurisdiction for the buyer and for us shall be Vaduz.** We shall be entitled to bring action against the buyer at his/its domicile, however.
13.2 The legal relationship between the parties shall be governed by the substantive laws of Switzerland. The application of the UN convention on contracts for the international sale of goods (CISG) shall be excluded.

Hoval

Responsibility for energy and environment.

The Hoval brand is internationally known as one of the leading suppliers of indoor climate control solutions. More than 66 years of experience have given us the necessary capabilities and motivation to continuously develop exceptional solutions and technically advanced equipment. Maximising energy efficiency and thus protecting the environment are both our commitment and our incentive. Hoval has established itself as an expert provider of intelligent heating and ventilation systems that are exported to over
50 countries worldwide.

Hoval Aktiengesellschaft
Austrasse 70
FL-9490 Vaduz
Principality of Liechtenstein
(Swiss customs territory)
Phone +423 3992 400
Fax +423 3992 618
E-Mail info@hoval.com
www.hoval.com

Hoval heating technology

As an energy-neutral supplier with a full range of products, Hoval helps its customers to select innovative system solutions for a wide range of energy sources, such as heat pumps, biomass, solar energy, gas, oil and district heating. Services range from private residential units to large-scale industrial projects.

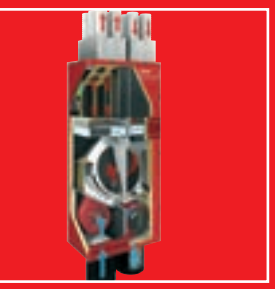

Hoval residential ventilation

Increased comfort and more efficient use of energy from private housing to industrial halls: our controlled residential ventilation products provide fresh, clean air for living and working space. Our innovative system for a healthy room climate uses heat and moisture recovery, while at the same time protecting energy resources and providing a healthier environment.

Hoval indoor climate systems

Supplying fresh air, removing extract air, heating, cooling, filtering and distributing air, utilising heat gains or recovering cold energy – no matter what the task, Hoval indoor climate systems provide tailor-made solutions with low planning and installation costs.

2019

PEFC